RHODE ISLAND PUBLIC TRANSIT AUTHORITY

705 Elmwood Avenue
Providence, RI 02907

GENERAL GUIDELINES FOR COMPLETING REQUEST FOR PROPOSALS PACKAGE

This document is intended as a guideline to assist prospective proposers in successfully completing the necessary Proposal paperwork. You are strongly encouraged to read the Instructions for Proposers Sections very carefully. This document is NOT intended to replace the more-detailed instructions that are included in the attached Proposal Package.

- It is **EXTREMELY IMPORTANT** that all required forms be filled out completely. Federal and State Regulations mandate that these forms be filled out properly. Failure to fill out these forms may result in your Proposal being ruled non-responsive. Non-Responsive Proposals **will not** be awarded the contract.
- **REMEMBER to completely fill out** all REQUIRED FORMS (see REQUIRED FORMS Checklist). The **forms that are checked off are the only ones that apply to this Proposal. Please submit them in the correct order by Page Number.**
- **In the event the Proposal requests specific information; Please use the forms provided, attach additional sheets to the forms if necessary. DO NOT substitute your own forms.**
- If a form does not apply to your business or Proposal, please mark the form Not Applicable or some other similar wording at your discretion.
- DBE (Disadvantaged Business Enterprise) Obligation. RIPTA agrees to ensure that DBES, as outlined in 49 CFR Part 26, as amended, have the maximum opportunity to participate in the performance of contracts. Therefore, it is imperative that you read the DBE Section and complete the necessary Paperwork DBEs submitted must be certified by the State of Rhode Island at the time of Proposal submittal.
- Make Sure the Proposal Response is received by the RIPTA Purchasing Department by the designated date and time. Late Proposals will not be accepted.
- It shall be the responsibility of prospective proposers to check the State of Rhode Island, Department of Administration Division of Purchases Website for any addenda.
- Make Sure that the Proposal is returned in a **Sealed** Envelope or Box **CLEARLY LABELED** with the following Information: **Proposal Number and what the Proposal is for. This information should be in the lower left-hand corner**. The envelope or box should also be labeled **Proposal DOCUMENTS ENCLOSED**
- When in doubt, contact RIPTA Contracts Manager sgomes@ripta.com
- **Proposal must be submitted pre-punched for standard three ring binders. A binder is not required. Please note that United Parcel Service will not deliver to our address. Please do not wait until the last minute with questions. RIPTA has limited Staff, which may not be available at all times.**

Please refer to Page 82 for Scope of Work

The following label shall be affixed to the envelope or package containing the Proposal response documents. It is imperative that his label be affixed to ensure the Proposal documents are received and routed in the proper manner:

Return Address

_____

_____

_____

PROPOSAL DOCUMENTS ENCLOSED

CONTRACTS MANAGER
Rhode Island Public Transit Authority
Purchasing Department
Room 217
705 Elmwood Avenue
Providence, RI 02907

PROPOSAL NUMBER: **23-34**

PROPOSAL FOR: **Providence Bus Tunnel Drainage and Interior Rehabilitation**

DUE: **August 10, 2023,**

RHODE ISLAND PUBLIC TRANSIT AUTHORITY

705 Elmwood Avenue
Providence, RI 02907

REQUIRED COMPANY INFORMATION FORM

The following information is mandatory; Failure to complete this section may jeopardize your eligibility to be awarded the contract. ALL SECTIONS OF THIS FORM MUST BE FILLED OUT COMPLETELY

THIS INFORMATION IS REQUIRED IN ACCORDANCE WITH 49CFR 26.11.

THIS FORM IS REQUIRED FOR ALL PROPOSERS, PRIME CONTRACTORS, POTENTIAL SUBCONTRACTORS AND SUBCONTRACTORS

PLEASE PRINT OR TYPE YOUR INFORMATION

COMPANY NAME _____

COMPANY STREET ADDRESS: _____

_____

COMPANY MAILING ADDRESS: _____

_____

COMPANY REMIT TO ADDRESS: _____

COMPANY CONTACT PERSON:_____

COMPANY TELEPHONE NUMBER:_____

EMERGENCY 24 HOUR TELEPHONE NUMBER(S) (IF APPLICABLE): _____

COMPANY TELEFAX NUMBER: _____

COMPANY CONTACT EMAIL: _____

AGE OF THE FIRM (YEARS): _____

ANNUAL GROSS RECEIPTS (DOLLARS):_____

AVG 3 YEAR GROSS RECEIPTS LESS THAN 23.98 MILLION YES___ NO ____

DOES THE STATE OF RHODE ISLAND AS CERTIFY YOUR FIRM A DISADVANTAGED BUSINESS ENTERPRISE? _____

DUNN AND BRADSTREET NUMBER: _____

NAICS CODE: _____ **INDUSTRY** _____

NAICS Code can be found at the following website: www.naics.com

COMPANY STATUS: ____PRIME CONTRACTOR _____ SUBCONTRACTOR

RHODE ISLAND PUBLIC TRANSIT AUTHORITY
Request for Proposals Number 23-34

REQUEST FOR PROPOSALS

PROPOSAL NO:	**23-34**
DATE OF INVITATION:	**June 29, 2023**
PRE-PROPOSAL MEETING:	**JULY 13,2023**
PROPOSAL RECEIPT DATE:	**August 10, 2023,**
FURNISHING OF:	**Providence Bus Tunnel Drainage and Interior Rehabilitation**
FTA PROJECT NO.	**Various FTA**

The participant shall specify the official name of his/her company in the upper left-hand corner of the Proposal Response Envelope and show **PROPOSAL NO: and Proposal Description in the lower left-hand corner and send or deliver to**:

Purchasing Department
Room 217
705 Elmwood Avenue
Providence, RI 02907

The participant shall execute the offer form enclosed herewith.

Proposals will be reviewed and evaluated; all participants will be notified as soon as approval of award is made.

The Proposers shall execute the offer form enclosed herewith. The Proposers shall return **3 copy (ies)** with the **original** Proposal.

RIPTA RESERVES THE RIGHT TO REJECT PROPOSALS FROM PARTICIPANTS WHO HAVE NOT USED THE FORM AND PROPER PROPOSAL RESPONSE ENVELOPE FORMAT.

RIPTA RESERVES THE RIGHT TO CANCEL ANY PARTICULAR SOLICITATION, AND/OR REJECT ANY OR ALL PROPOSALS.

RHODE ISLAND PUBLIC TRANSIT AUTHORITY
Request for Proposals Number 23-34
TABLE OF CONTENTS

RHODE ISLAND PUBLIC TRANSIT AUTHORITY

Request for Proposals Number 23-34

TABLE OF CONTENTS

RHODE ISLAND PUBLIC TRANSIT AUTHORITY
Request for Proposals Number 23-34
TABLE OF CONTENTS

RHODE ISLAND PUBLIC TRANSIT AUTHORITY
Request for Proposals Number 23-34
TABLE OF CONTENTS

RHODE ISLAND PUBLIC TRANSIT AUTHORITY

Request for Proposals Number 23-34

TABLE OF CONTENTS

RHODE ISLAND PUBLIC TRANSIT AUTHORITY

Request for Proposals Number 23-34

TABLE OF CONTENTS

RHODE ISLAND PUBLIC TRANSIT AUTHORITY

Request for Proposals Number 23-34

I. CALENDAR

A. Date of Invitation: June 29, 2023

B. Pre-Proposal Conference:

1. **Date:** **JULY 13, 2023**
2. **Time:** **10 AM Eastern Time**
3. **Place:** **RIPTA Board Conference Room**
   269 Melrose Street, Providence, RI
   ******Any and all appeals must be submitted in writing prior to the time and date set for the Pre-Proposal Meeting.***

A Mandatory Pre-Proposal meeting will be held at RIPTA Transportation Building Conference Room, 269 Melrose Street Providence, RI 02907. The meeting will be followed by a brief tour of the East Side Tunnel. RIPTA will be providing a bus to bring bidders to and from the tunnel.
This Tunnel is an active tunnel so for safety reasons, bidders are STRICTLY PROHIBITED from entering the Tunnel that are not part of this tour. Pre-Proposal Meeting Attendees must wear Reflective Safety Vests. This Meeting will be the only opportunity to tour the Tunnel as it is an active tunnel utilized by the Transit Service.

C. Request for Approved equals and Questions
must be submitted **ELECTRONICALLY IN MICROSOFT WORD FORMAT** to RIPTA Contracts Manager by:

1. **Date:** **July 20, 2023**
2. **Time:** **1:00 p.m. Eastern Time**
3. **Response to approved equals: 5-10 days prior to Proposal opening.**

   Please submit all of your questions in writing in one document by the deadline above; do not submit them piecemeal.

   Requests for Approved Equals must be accompanied by adequate Technical Information for the Authority to review. Requests submitted with insufficient information will not be considered.

   Requests for Approved Equals/Questions submitted after the deadline will NOT be considered

   It should be noted that Requests for Approved Equals/Questions can be used for both questions regarding the technical specifications and regarding contractual terms and conditions

   Approved Equals must be submitted by the Prime Contractors only. Potential Subcontractors must coordinate with Prime Contractors for submission of any products they wish to submit.

D. Proposal Receipt:

1. **Date:** **August 10, 2023,**
2. **Time:** **1:00 p.m. Eastern Time**

II. NOTICE TO OFFERORS

A. DATE: June 29, 2023

The Rhode Island Public Transit Authority (RIPTA) is requesting Proposals for the following:

Providence Bus Tunnel Drainage and Interior Rehabilitation

All Proposals shall be submitted in the required format and quantity as set forth in the RFP. This Proposal must be received by August 10, 2023, at 1:00 p.m. Eastern Time by the Purchasing Department, Room 217, 705 Elmwood Avenue Providence, Rhode Island 02907. **Please be advised that United Parcel Service does not deliver to this address.**

Award of contract is subject to financial assistance of 80% from the U.S. Department of Transportation (FTA Project Various FTA) and 20% from RIPTA. The successful Proposer shall comply with the conditions and terms applicable thereunder.

A Pre-Proposal Meeting will be held at the RIPTA Transportation Building Conference Room, 269 Melrose Street Providence, RI at 10AM Eastern Time on July 13, 2023. Proposers are expected to download and review the Proposal Technical Specifications prior to the pre-Proposal meeting. A Mandatory Pre-Proposal meeting will be held at RIPTA Transportation Building Conference Room, 269 Melrose Street Providence, RI 02907. The meeting will be followed by a brief tour of the East Side Tunnel. RIPTA will be providing a bus to bring bidders to and from the tunnel.
This Tunnel is an active tunnel so for safety reasons, bidders are STRICTLY PROHIBITED from entering the Tunnel that are not part of this tour. Pre-Proposal Meeting Attendees must wear Reflective Safety Vests. This Meeting will be the only opportunity to tour the Tunnel as it is an active tunnel utilized by the Transit Service.

The successful Proposer shall be required to comply with all applicable Equal Opportunity and Disadvantaged Business Enterprise regulations. Proposers are encouraged to view the Rhode Island Minority Business Enterprise (RIMBE) website for a list of Disadvantaged Business Enterprise vendors that may be interested in working with your company on this Proposal. All DBEs submitted must be certified by the State of Rhode Island at the time of Proposal submittal.
The RIMBE Website address is http://odeo.ri.gov/offices/mbeco/dbe-program.php

The Disadvantaged Business Enterprise goal for this project is Five %

The successful Proposer shall be required to certify that he is not on the Comptroller General's List of Ineligible Contractors.

An electronic copy of the IFB is available on the State of Rhode Island, Department of Administration, Division of Purchases Website.
http://www.purchasing.ri.gov/bidding/ExternalBidSearch.aspx
RIPTA Solicitations can be found in the Quasi-Public Sector, listed under the Rhode Island Public Transit Authority. Bidders must ***download the Bid documents and complete the required forms.***

If you are unable to access the Internet, a printed copy of the Proposal may be obtained from RIPTA's Purchasing Department by calling Sheryl Gomes at (401) 784-9500, ext. 1281.

III. CONTACT LIST

Please contact RIPTA's Contracts Manager with any questions you may have regarding this Procurement.

A. Contracts Manager
Ms. Sheryl Gomes
Phone: (401) 784-9500 extension 1281
sgomes@ripta.com

All contacts with the Authority regarding this Procurement Action shall be directed to the RIPTA Contracts Manager. The Contracts Manager will contact the appropriate RIPTA Staff as needed. The Authority does not assume responsibility for the accuracy of information obtained from other RIPTA Staff.

Failure to adhere to this procedure may result in rejection of your Proposal.

IV. PUBLIC COPY OF PROPOSAL SUBMITTAL

Each Proposers must submit a copy of their proposal submittal to be available for public inspection upon opening of the proposals. The burden to identify and withhold from the public copy that is released at the proposal opening any trade secrets, commercial or financial information or other information the Proposers deems not subject to public disclosure pursuant to Chapter 38-2 of the Rhode Island Access to Public Records Act shall ret with the Proposers submitting the proposal. Failure to submit a “Public Copy” will result in the submitted copy being deemed available to the public.

V. ELECTRONIC COPY OF THE PROPOSAL RESPONSE

Each Proposer must submit an electronic copy of their Proposal Response. **The electronic version shall be USB** This is in addition to the number of printed copies requested elsewhere in this document. **This must be submitted WITH the proposal, NOT sent separately. Please DO NOT Password Protect the electronic version.**

VI. INSTRUCTIONS FOR PROPOSERS

A. Definition of Terms.

Whenever herein or in the Proposal contract documents the following terms, pronouns or abbreviations are used, the intent and meaning shall be interpreted as follows:

1. **Procuring agency**
   Procuring Agency is defined as the Rhode Island Public Transit Authority.
2. **RIPTA**
   RIPTA shall refer to the Rhode Island Public Transit Authority.
3. **Contractor**
   Contractor shall mean the successful Proposers to whom a contract is awarded.
4. **Request for Proposals (RFP)**
   Request for Proposals shall mean the complete assembly of related documents, whether attached or incorporated by reference, furnished by RIPTA for the purpose of proposing, including the Request for Proposals, the Instructions for Proposers, Supplemental Conditions, Specifications, Proposal Form, Proposal Attachments, and Addenda, if any. Proposals shall be in strict accordance with the Terms of the RFP.
5. **Authorized Signature.**
   The person who is executing this contract on behalf of the Proposers and who is authorized to bind the Proposers.
6. **Request for Proposals.**
   The advertisement of the issuance by RIPTA of a Request for Proposals, which is published, posted, and sent to prospective proposers informing interested persons of the proposed procurement.
7. **Proposal Evaluation Factors/Criteria**
   Evaluation Factors/Criteria given in the Technical Specifications are not listed in order of priority. The order of the listing has no relationship to the relative importance of the factors.
8. **Basis of Award**
   The Contract will be awarded to the vendor that submits the Proposal that is rated the overall best value to the Authority.
9. **Notice of Award.**
   The receipt of a Purchase Order or Letter of Contract issued by RIPTA shall serve as notice of the award of contract.
10. **Specifications.**
    The written description and statement of necessary requirements of the equipment/construction, supplies and/or service to be provided.
11. **Tender**
    The Proposer's documents and all attachments tendered in response to the Proposal requests.

B. Form of Proposal and Signature.

The Proposal shall be presented with an original and 3 copies on the forms provided herewith by RIPTA and shall be enclosed in a sealed envelope marked and addressed as required on the Proposal form.

Depending upon whom the Proposal is made by the following signature and instructions must be followed:

1. **Sole Owner.**
   Proposal shall be signed with his full name, and his address shall be given.
2. **General Partnership.**
   Proposal shall be signed with the partnership name by a partner who shall also sign his/her own name, and the name and address of each partner shall be given.
3. **Limited Partnership**
   Proposal shall be signed with the partnership name by a general partner who has authorization to do so who shall also sign his/her own name.
4. **Corporation.**
   Proposal shall be signed by an officer or other individual who has the full and proper authorization to do so, and the corporate seal shall be affixed to the contract, or if the corporate seal is not affixed to the contract and it is signed by a person other than an officer, there must be attached to the contract a certified copy of a resolution of the corporation authorizing such officer or person to sign written contracts for and on behalf of the corporation.

C. Proposal.

The terms of the Proposal must not be changed. All blank spaces in said form shall be properly filled. Alterations by erasure or interlineation must be explained or noted in the Proposal over the signature of the Proposers. If the unit price and the total amount named by a Proposers for any item, do not agree, **the unit price** alone will be considered as representing the Proposer's intention.

D. Unauthorized Conditions.

Unauthorized conditions, limitations or provisions attached to a Proposal will render it informal and may cause its rejection.

E. Submission of Proposal.

Prior to the hour specified in the Request for Proposals inviting sealed Proposals, all Proposals shall be delivered to the Contracts Manager at the address shown in the Request for Proposals. All costs associated with preparation and submission of a Proposal shall be borne by the Proposers. The Authority assumes no responsibility for these costs.

Each Proposal shall be in a sealed envelope properly labeled on the outside with the Proposal number and description. No Proposals received after said time or at any place other than the time and place as stated in the Request for Proposals will be considered. **No Proposal electronically transmitted, e.g., email and fax will be considered.**

F. Modification or Withdrawal of Proposal.

A Proposal may be modified or withdrawn by written notice received in the office designated in the Request for Proposals no later than the exact time set for receiving of Proposals. A Proposal may be withdrawn in person by a Proposers, or his/her authorized representative provided his/her identity is made known and he signs a receipt for the Proposal if the withdrawal is prior to the exact time set for receiving

the Proposals. Modifications of Proposals and requests for withdrawal of Proposals which are received in the office designated in the Request for Proposals after the exact time set for opening are "late modifications" and "late withdrawals" respectively. A late modification or late withdrawal will be subject to the rules and procedures applicable to late Proposals. A late modification of an otherwise successful Proposal will be opened at any time it is received. If, in the judgment of the Director of Procurement, it makes the terms of the Proposal more favorable to RIPTA, it will be presented to the Contract Manager and Director of Procurement for consideration.

G. Proposers Interviews or Presentations

The Authority reserves the right, at its sole discretion, to request Proposal respondents to make presentations or interviews. This may be done in person, or through electronic means (i.e., telephone or via the internet). The purpose of this presentation is to enhance the presentation, not to amend it. Proposers should prepare their Proposal responses based upon the assumption that there will not be interviews, unless specifically stated in the Technical Specifications. The Written Proposal should reflect their best effort.

H. Samples

Samples, when required, must be submitted within the time specified, at no expense to RIPTA. If not, destroyed or used up during testing, samples will be returned upon request at the Proposer's expense.

I. Canvass of Proposals.

At the hour specified in the Request for Proposals, a designee will receive the Proposals. An award will be made, or Proposals rejected by RIPTA within the time specified in the specifications or Proposal forms, or if not specified, within a reasonable time after Proposals have been opened.

J. Rejection of Proposals.

RIPTA reserves the right to reject any and all Proposals. The right is reserved to reject any or all Proposals, and to waive technical defects as the interest of RIPTA may require. Each Proposer shall be notified if all Proposals are rejected.

K. Sales Tax Exemption.

RIPTA confirms there are no state, local, or federal taxes applicable to this purchase.

L. Delivery Charges.

Unless otherwise stated in the RFP, proposers shall include freight and/or delivery charges in the total price of their Proposals.

M. Alternative Proposal

Submissions of an alternative Proposal or Proposals, except as specifically called for in the Specifications or RFP, will render the Proposal informal and may cause its rejection.

N. Non-Collusive Affidavit.

The Proposers represents and warrants that its Proposal is genuine and not sham or collusive or made in the interest or in behalf of any person not therein named, and that the Proposers has not, directly or indirectly, induced or solicited any other Proposers to submit a sham Proposal or any other person, firm or corporation to refrain from proposing, and that the Proposers has not in any manner sought by collusion to secure itself an advantage over any other Proposers.

O. Interest of RIPTA Personnel.

The Proposers represents and warrants that neither the Chief Executive Officer, nor any Board Member, nor any employee of RIPTA, is in any manner interested directly

or indirectly in the Proposal or in the contract, which may be made under it, or in any expected profits to arise therefrom.

P. Penalty for Collusion.

If at any time it shall be found that the person, firm or corporation to whom a contract has been awarded has, in presenting any Proposal or Proposals, colluded with any other party or parties, then the contract so awarded shall be **voidable** by RIPTA and the Contractor and his bondsmen shall be liable to RIPTA for all loss or damage which RIPTA may suffer thereby and the RIPTA Board may advertise for a new contract for said labor, supplies, materials, equipment or service.

Q. Proposal Acceptance Period

All Proposals shall remain in effect one hundred twenty (120) calendar days from the date of Proposal opening. Proposals offering less than one hundred twenty (120) calendar days for acceptance by RIPTA from the date set for opening will be considered non-responsive and will be rejected.

R. Postponement.

RIPTA reserves the right to postpone, for its own convenience, the date the Proposal is to be received, but any Proposers whose Proposal has already been submitted to RIPTA when the decision to postpone is made shall be afforded the opportunity to revise or withdraw its Proposal.

S. Amendment and/or Postponement.

RIPTA reserves the right to revise or amend the specifications up to the time set for the receiving of Proposals. Such revisions and addenda, if any, shall be announced by addenda to this solicitation. It shall be the responsibility of prospective proposers to check the State of Rhode Island, Department of Administration Division of Purchases Website for any addenda. If the revisions and addenda require changes in quantities or price Proposal, or both, the date set for receiving Proposals may be postponed by such number of days as in the opinion of RIPTA shall enable proposers to revise their Proposals. In any case, Proposal openings shall be at least seven (7) working days after the last addendum, and the addenda shall include an announcement of the new date, if applicable.

T. Single Proposal.

1. In the event a single Proposal is received, RIPTA will, at its option, either conduct a price and/or cost analysis of the Proposal and make the award by negotiation or reject the Proposal and re-advertise. A price analysis is the process of examining the Proposal and evaluating a prospective price without evaluating the separate cost elements. Price analysis shall be performed by comparison of the price quotations submitted on other current quotations, with published price lists, or other established or competitive prices. The comparison shall be made to a purchase of similar quantity and involving similar specifications. Where a difference exists, a detailed analysis must be made of this difference and costs attached thereto.
2. Where it is impossible to obtain a valid price analysis, it may be necessary for RIPTA to conduct a cost analysis of the Proposal price. Cost analysis is the review and evaluation of a contractor's cost or pricing data and of the factors applied in projecting from such data the estimated costs of performing the contract, assuming reasonable economy and efficiency.
3. The price and/or cost analysis shall be made by RIPTA's Procurement Department.

U. Qualifications for Award.

The Proposers must be a person, firm, or corporation that:

1. Has in operation, or has the capability to have in operation, a manufacturing plant adequate to assure delivery of all equipment within the time specified under this contract.
2. Has adequate service personnel, or has the capability to have such personnel, to satisfy any service problems that may arise during the warranty period.
3. Has the necessary facilities and financial resources or has the capability to obtain such facilities and resources to complete the contract in a satisfactory manner within the required time.
4. The Procuring agency shall have the right to conduct a pre-award survey on each Proposers. Doubt as to the capability or technical ability, productive capacity, or financial strength, which cannot be resolved affirmatively, shall require a determination of non-responsibility by RIPTA.

V. Ineligible Proposers.

The Proposers shall be required to certify, upon request, that it is not on the U.S. Comptroller General's Consolidated List of Persons or Firms currently debarred for Violations of Various Public Contracts Incorporating Labor Standards Provisions.

W. Disadvantaged Business Enterprise (DBE)

The Rhode Island Public Transit Authority shall not discriminate on the basis of race, color, national origin, or sex in the award and performance of any DOT-assisted contract or in the administration of its DBE Program or the requirements of 49 CFR part 26. RIPTA will take all-necessary and reasonable steps under 49 CFR part 26 to ensure nondiscrimination in the award and administration of DOT-assisted contracts. RIPTA's DBE Program, as required by 49 CFR part 26 and as approved by DOT, is incorporated herein by reference. Implementation of this DBE Program is a legal obligation and failure to carry out its terms shall be a violation of Federal law and a breach of any applicable DOT-assisted contract. Upon notification to RIPTA of its failure to carry out its approved DBE Program, the DOT may impose sanctions as provided for under 49 CFR part 26 and may, in appropriate cases where a firm/contractor makes a false or fraudulent statement in connection with participation of a DBE in any DOT assisted program or otherwise violates Federal law, refer the matter for prosecution under 18 U.S.C. 1001 and/or under 49 CFR Part 31, Program Fraud Civil Remedies Act. ..

X. Addenda.

RIPTA may issue addenda containing amendments to its proposal solicitation documents. Any addendum issued less than seven (7) days prior to the receipt of Proposal shall, if necessary, contain a provision postponing the date of the receipt of Proposal to a date that will provide proposers adequate time to respond to the addenda. Addenda shall be numbered sequentially.

Y. Proposer's Requests and Appeals.

1. Appointments.

Proposers and suppliers may make appointments with the contact person listed in the specifications to discuss the specifications.

2. Amending Materials.

Any amending material issued by RIPTA pertaining to the Proposal solicitation documents (including, without limitation: clarifications, approved equals, and corrections) shall be set forth in an addendum and sent to all parties who are on record as having obtained a copy of the Proposal solicitation documents.

3. Appeal.

Should any Proposers or supplier choose to appeal RIPTA's decision, such appeal must be in writing and received by RIPTA not less than seven (7) calendar days before the date of receipt of Proposal. RIPTA has no obligation to consider appeals received less than seven (7) calendar days before the date of the receipt of Proposal.

4. Withdrawal.

The Proposers or supplier may withdraw its appeal at any time before RIPTA issues a final decision. There shall be no further review of the appeal after the final decision is issued.

5. Notification.

Should RIPTA postpone the date of the receipt of Proposal owing to the appeal, RIPTA shall notify all parties who are on record as having obtained a

copy of the Proposal solicitation documents that an appeal has been filed and that the date of the receipt of Proposal shall be postponed until RIPTA has issued its final decision. RIPTA shall issue appropriate amendments postponing the re-scheduling date of the receipt of Proposal.

Z. Equal Employment Opportunity.

In connection with the execution of this contract, the Contractor shall not discriminate against any employee or applicant for employment because of race, color, sex, age, national origin, religion, sexual orientation, gender identity or expression, disability status or veteran status. The Contractor shall take affirmative action to ensure that applicants are employed and that employees are treated during their employment, without regard to their race, color, sex, age, national origin, religion, sexual orientation, gender identity or expression, disability status or veteran status. Such actions shall include, but not limited to, the following: employment, promotion, demotion, transfer, recruitment or recruitment advertising, layoff, or termination, rates of pay, or other forms of compensation, and selection for training, including apprenticeship.

AA. Prohibited Interest.

No member, officer, or employee of RIPTA or of a local public body during his tenure or for one year thereafter shall have any interest, directly or indirectly, in this contract or the proceeds thereof.

BB. Interest of Members of Congress.

No member or delegate to the Congress of the United States shall be admitted to any share or part of this contract or to any benefit arising therefrom.

CC. Contract Commencement Date.

The contract commencement date shall be the date of the signing of the Purchase Order or by Letter of Contract signed by an authorized RIPTA employee.

DD. Notice, Waiver and Applicable Law.

Notice given to Contractor and RIPTA shall be given to the parties in writing by certified mail at the respective addresses set forth herein. Waiver by RIPTA of a breach by Contractor of any provision of this contract shall not be deemed a waiver of future compliance therewith, and such provision as well of future provisions hereunder, shall remain in full force and effect. The rights and duties of the parties hereto shall be determined by the laws of the State of Rhode Island, and to that end this agreement shall be considered and construed as a contract made an to be performed in the State of Rhode Island.

EE. Protest.

1. General.

Protests will be accepted from prospective Proposers or Offerors whose direct economic interest would be affected by the award of a Contract or by failure to award a contract. The RIPTA Director of Purchasing will consider all protests or objections filed in a timely manner regarding the award of a contract, whether submitted before or after award. If the protest is oral and the matter cannot be otherwise resolved, written confirmation of the protest will be requested. Protest submissions should be concise, logically arranged, and clearly state the grounds for the protest. Protests must include at least the following information:

a. Name, address, and telephone number of protester.
b. Identification of the solicitation or Contract number.

c. A detailed statement of the legal and factual grounds of protest, including copies of relevant documents.

d. A statement as to what relief is requested.

e. Protest should be sent to:
Director of Procurement
RI Public Transit Authority
Room 217
705 Elmwood Avenue
Providence, RI 02907

f. Protests must be filed with the RIPTA in accordance with our procedures and time requirements. The protest to RIPTA must be complete and contain all the issues that the protester believes relevant. RIPTA will respond to each substantive issue raised in the protest. Failure to include an issue in the protest eliminates that issue from further consideration. All protest decisions entered by RIPTA are final in accordance with FTA "Third Party Contract" Regulation.

g. On occasion, when considered appropriate, an informal conference on the merits of the protest with all interested parties may be held.

FF. Protests before Award

1. Solicitation Phase.

Protests concerning the solicitation must be submitted in writing five (5) working days prior to Proposal opening or closing date for receipt of Proposals. If the written protest is not received by the time specified, award may be made in the normal manner unless the Director of Purchasing, upon investigation, finds that remedial action is required. Oral protests not followed up by a written protest will be disregarded.
Notice of a protest and the basis therefore will be given to all potential Proposers or Offerors.

2. Pre-Award Phase.

When a protest against the making of an award is received after receipt of Proposals but prior to award, the Director of Purchasing may determine to withhold the award pending disposition of the protest. The proposer or proposers whose Proposals might become eligible for award should be requested, before expiration of the time for acceptance of their Proposals, to extend the time for acceptance (with consent of sureties, if any) to avoid the need for re-advertising. RIPTA will provide a written response to each material issue raised in the written protest.

Where a written protest against the making of an award is received in the time specified, award will not be made prior to five (5) working days after resolution of the protest. If a protest has been filed with FTA, award will not be made during the pendency of that protest. **It should be noted that the FTA will not substitute its judgment for that of RIPTA unless the matter is primarily a Federal concern.** Circumstances where RIPTA would allow an exception to the stated protest award policy are:

a. The items to be procured are urgently required.

b. Delivery or performance will be unduly delayed by failure to make award promptly; or,

c. Failure to make award will otherwise cause undue harm to RIPTA or the Federal Government.

If award is made, the Director of Procurement will document the file to explain the need for an award and will give written notice of the decision to proceed with the award to the protester and, as appropriate, to others concerned.

GG. Protests after Award.

A protest received not later than 10 (ten) working days after award shall be reviewed by the Director of Purchasing. The Contractor will, in any event, be furnished with the notice of protest and the basis, therefore. When it appears likely that an award may be invalidated and a delay in receiving the supplies or services is not prejudicial to the Authority's interest, the Director of Purchasing should consider a mutual agreement with the Contractor to suspend performance on a no-cost basis.

HH. Source Selection and Contract Award

The contract shall be awarded with reasonable promptness by written notice to the responsive and responsible Proposers whose Proposal will be evaluated using a best value approach. The ultimate selection of an offeror will be on the basis of overall best value to the Authority.

II. Title VI Assurances

Contractors and subcontractors will be required to comply with all requirements imposed by Title VI of the Civil Rights Act of 1964 (49 U.S.C. §2000d, et seq.), and the Assurances by RIPTA pursuant thereto.

JJ. Energy Conservation Requirements:

The Contractor agrees to comply with mandatory standards and policies relating to energy efficiency, which are contained in the State of Rhode Island Energy Conservation Plan issued in compliance with the Energy Policy and Conservation Act.

KK. Program Fraud

1. The Contractor acknowledges that the provisions of the Program Fraud Civil Remedies Act of 1986, as amended, 31 U.S. C. § §3801 et. Seq. and U. S. Department of Transportation regulations. “Program Fraud Civil Remedies” 49 C.F. R. Part 31, apply to its actions pertaining to this Project. Upon execution of the underlying contract, the Contractor certifies or affirms the truthfulness and accuracy of any statement it has made , it makes, it may make, or causes to be made, pertaining to the underlying contract or the Federal Transit Administration assisted project for which this contract work is being performed. In addition to other penalties that may be applicable, the Contractor further acknowledges that if it makes, or causes to be made, a false, fictitious, or fraudulent claim, statement, submission, or certification, the Federal Government reserves the right to impose the penalties of the Program Fraud Civil Remedies Act of 1986 on the Contractor to the extent the Federal Government deems appropriate.
2. The Contractor also acknowledges that if it makes, or causes to be made, a false, fictitious, or fraudulent claim, statement, submission or certification to the Federal Government under a contract connected with a project that is financed in whole or in part with Federal assistance originally awarded by the FTA under the authority of 49 U.S.C. § 5307, the Government reserves the right to impose the penalties of 18 U.S.C. § 5307 (n) (1) on the Contractor, to the extend the Federal Government deems appropriate.

3. The Contractor agrees to include the above two clauses in each subcontract financed in whole or in part with Federal assistance provided by FTA. It is further agreed that the clauses shall not be modified, except to identify the subcontractor who will be subject to the provisions.

LL. No Government Obligation to Third Parties:

1. The Purchaser and the Contractor acknowledge and agree that, notwithstanding any concurrence by the Federal Government in or approval of the solicitation or award of the underlying contract, absent the express written consent by the Federal Government, the Federal Government is not a party to this contract and shall not be subject to any obligations or liabilities to the Purchaser, Contractor, or any other party (whether or not a party to that contract) pertaining to any matter resulting from the underlying contract.
2. The Contractor agrees to include the above clause in each subcontract financed in whole or in part with Federal assistance provided by FTA. It is further agreed that the clause shall not be modified, except to identify the subcontractor who will be subject to its provisions.

MM. Veteran's Employment

The Contractor shall ensure that contractors working this project shall give a hiring preference, to the extent practicable, to veterans (as defined in Section 2108 of title 5) who have the requisite skills and abilities to perform the work required under the contract. This shall not be understood, construed, or enforced in any manner that would require an employer to give a preference to any veteran over any equally qualified applicant who is a member of any racial or ethnic minority, female, an individual with a disability, or a former employee.

NN. Solid Waste (Recycled Products)

This Contract must comply with Section 6002 of the Solid Waste Disposal Act as amended by the Resource Conservation and Recovery Act. The requirements of Section 6002 include procuring only items designated in guidelines of the Environmental Protection Agency (EPA) at 40 C.F.R. part 247 that contain the highest percentage of recovered materials practicable, consistent with maintaining a satisfactory level of competition, where the purchase price of the item exceeds $10,000 or the value of the quantity acquired during the preceding fiscal year exceeded $10,000; procuring solid waste management services in a manner that maximizes energy and resource recovery; and establishing an affirmative procurement program for procurement of recovered materials identified in the EPA guidelines.

OO. Prohibition on certain telecommunications and video surveillance services or equipment.

Vendors responding to this contract are prohibiting from providing the equipment that uses covered telecommunications equipment or services as a substantial or essential component of any system,
or as critical technology as part of any system. As described in Public Law 115–232, section 889, covered telecommunications
equipment is telecommunications equipment produced by Huawei Technologies Company or ZTE Corporation (or any subsidiary or
affiliate of such entities). (i) For the purpose of public safety,

security of government facilities, physical security surveillance of critical infrastructure, and other national security purposes, video surveillance and telecommunications equipment produced by Hytera Communications Corporation, Hangzhou Hikvision Digital
Technology Company, or Dahua Technology Company (or any subsidiary or affiliate of such entities). (ii) Telecommunications or video surveillance services provided by such entities or using such equipment. (iii) Telecommunications or video surveillance equipment or services produced or provided by an entity that the Secretary of Defense, in consultation with the Director of the National Intelligence
or the Director of the Federal Bureau of Investigation, reasonably believes to be an entity owned or controlled by, or otherwise connected to, the government of a covered foreign country.

PP. **Disputes, Breaches, Defaults, and Litigation.**

The FTA Interest. FTA has a vested interest in the settlement of any violation of federal law, regulation, or requirement, or any disagreement involving the Award, the accompanying Underlying Agreement, and any Amendments thereto including, but not limited to, a default, breach, major dispute, or litigation, and FTA reserves the right to concur in any settlement or compromise. (b) Notification to FTA; Flow Down Requirement. If a current or prospective legal matter that may affect the Federal Government emerges, the RIPTA must promptly notify the FTA Chief Counsel and FTA Regional Counsel for the Region in which the RIPTA is located. The Contractor must include a similar notification requirement in its subcontracts at every tier, for any agreement that is a "covered transaction" according to 2 C.F.R. §§ 180.220 and 1200.220. (1) The types of legal matters that require notification include, but are not limited to, a major dispute, breach, default, litigation, or naming the Federal 95 Government as a party to litigation or a legal disagreement in any forum for any reason. (2) Matters that may affect the Federal Government include, but are not limited to, the Federal Government's interests in the Award, the accompanying Underlying Agreement, and any Amendments thereto, or the Federal Government's administration or enforcement of federal laws, regulations, and requirements. (3) Additional Notice to U.S. DOT Inspector General. RIPTA shall promptly notify the U.S. DOT Inspector General in addition to the FTA Chief Counsel or Regional Counsel for the Region in which the RIPTA is located, if the RIPTA has knowledge of potential fraud, waste, or abuse occurring on a Project receiving assistance from FTA. The notification provision applies if a person has or may have submitted a false claim under the False Claims Act, 31 U.S.C. § 3729, et seq., or has or may have committed a criminal or civil violation of law pertaining to such matters as fraud, conflict of interest, bid rigging, misappropriation or embezzlement, bribery, gratuity, or similar misconduct involving federal assistance. This responsibility occurs whether the Project is subject to this Agreement or another agreement between the RIPTA and FTA, or an agreement involving a principal, officer, employee, agent, or Third-Party Participant of the RIPTA. It also applies to subcontractors at any tier. Knowledge, as used in this paragraph, includes, but is not limited to, knowledge of a criminal or civil investigation by a Federal, state, or local law enforcement or other investigative agency, a criminal indictment or civil complaint, or probable cause that could support a criminal indictment, or any other credible information in the

possession of RIPTA In this paragraph, "promptly" means to refer information without delay and without change. This notification provision applies to all divisions of the RIPTA, including divisions tasked with law enforcement or investigatory functions. (c) Federal Interest in Recovery. The Federal Government retains the right to a proportionate share of any proceeds recovered from any third party, based on the percentage of the federal share for the Underlying Agreement. Notwithstanding the preceding sentence, RIPTA may return all liquidated damages it receives to its Award Budget for its Underlying Agreement rather than return the federal share of those liquidated damages to the Federal Government, provided that RIPTA receives FTA's prior written concurrence. (d) Enforcement. RIPTA must pursue its legal rights and remedies available under any third-party agreement or any federal, state, or local law or regulation.

VII. GENERAL PROVISIONS

A. Definitions:

As used throughout this Contract, the following terms shall have the meanings set forth below:

1. Authority

Authority means Rhode Island Public Transit Authority (RIPTA).

2. Contracting Manager

the person executing this Contract on behalf of the Authority, and his or her successor, and the term includes, except as otherwise provided in this Contract, the authorized representative of a Contracting Officer acting within the limits of his authority.

3. Directed, Ordered, designated, or prescribed.

Wherever in the scope of the work the words directed, ordered, designated, prescribed, or words of like importance are used, it shall be understood that the direction, requirement, order, designation, or prescription of the Contracting Manager is intended and similarly the words approved, acceptable, satisfactory, or words of like importance shall mean approved by, or acceptable to, satisfactory to the Contracting Officer, unless expressly stated.

B. Changes:

The Contracting Officer may at any time, by a written order, and without notice to the sureties, make changes within the general scope of this Contract. If any such changes cause an increase or decrease in the cost of, or the time required for, the performance of any part of the work under this Contract, whether changed or not changed by the order, the Contracting officer shall make an equitable adjustment in the Contract price, the delivery schedule, or both, and shall modify the Contract.

The Contractor must assert its right to an adjustment under this article within 30 days from the date of receipt of the written order. Failure to agree to any adjustment shall be a dispute under the Disputes article. However, nothing in this article shall excuse the Contractor from proceeding with the contract as changed.

C. Extras:

Except as otherwise provided in this Contract, no payment for extras shall be made unless such extras and the price therefore have been authorized in writing in advance by the Contracting Officer.

D. Inspection:

All supplies, which term throughout this article includes without limitation raw materials, components, intermediate assemblies, and end products, shall be subject to inspection and test by the Authority, to the extent practicable at all times and places including the period of manufacture, and in any event prior to acceptance.

In case any supplies or lots of supplies are defective in material or workmanship or otherwise not in conformity within the requirements of this Contract, the Authority shall have the right either to reject them or require their correction. If any inspection or test is made by the Authority on the premises of the Contractor or a subcontractor, the Contractor without additional charge shall provide all reasonable facilities and assistance for the safety and convenience of the Authority inspectors in the performance of their duties.
All inspections and test by the Authority shall be performed in such a manner as not to unduly delay this work. The Authority reserves the right to charge to the Contractor any additional cost of Authority inspection and test when supplies are not ready at the time such inspection and test is requested by the Contractor or when re-inspection or retest is necessitated by prior rejection. Acceptance or rejection of the supplies shall be made as promptly as practicable after delivery, except as otherwise provided in this Contract; but failure to inspect and accept or reject supplies shall neither relieve the Contractor from responsibility for such supplies as are not in accordance with the contract requirements nor impose liability on the Authority, therefore. The inspection and test by the Authority of any supplies or lots thereof does not relieve the Contractor from any responsibility regarding defects or other failures to meet the Contract requirements, which may be discovered prior to acceptance. Except as otherwise provided in this Contract, acceptance shall be conclusive except as regard latent defects, fraud, or such gross mistakes as amount to fraud. The Contractor shall provide and maintain an inspection system acceptable to the Authority covering the supplies hereunder. Records of all inspection work by the Contractor shall be kept complete and available to the Authority during the performance of this Contract and for such longer period as may be specified elsewhere in this Contract.

E. **Responsible:**

Notwithstanding the requirements for any Authority inspection and test contained in Specifications applicable to this Contract, except where specialized inspections or tests are specified for performance solely by the Authority, the Contractor shall perform or have performed the inspections and tests required to substantiate that the supplies and services provided under the contract conform to the Drawing, Specifications and Contract requirements.

F. **Title and Risk of Loss**

Unless this Contract specifically provides for earlier passage of title, title to supplies covered by this Contract shall pass to the Authority upon formal acceptance. Unless this Contract specifically provides otherwise, risk of loss of or damage to supplies covered by this Contract shall remain with the Contractor, until acceptance by the Authority.

Notwithstanding the above, the risk of loss of or damage to supplies which so fail to conform to the Contract as to give a right of rejection shall remain with the Contractor until cure or acceptance, at which time the above shall apply.

G. **Storage of Contractor Material on RIPTA Property**

The Authority will not accept responsibility for any Contractor Material stored on RIPTA Property. It shall be the responsibility to provide a secure, method of storing their material on RIPTA Property.

H. Payments

The Contractor shall be paid, upon the submission of proper invoices or vouchers, the prices stipulated herein for supplies delivered and accepted or services rendered and accepted, less deductions, if any, as specified. The failure to perform may result in partial or full suspension of payment and/or process payment. The Authority's payment terms are 60 days after approval of an invoice unless otherwise negotiated.

I. Stop Work Order

The Contracting Manager may, at any time, by written order to the Contractor, require the Contractor to stop all, or part of the work called for by this Contract. Any such order shall be specifically identified as a STOP WORK ORDER issued pursuant to this article. Upon receipt of such an order, the Contractor shall forthwith comply with its terms and take all reasonable steps to minimize the incurrence of costs allocable to the work covered by the order during the period of work stoppage.

J. Disputes

1. Except as otherwise provided in this Contract, any dispute concerning a question of fact arising under this Contract which is not disposed of by agreement shall be decided by the Contracting Officer, who shall reduce his decision to writing and mail or otherwise furnish a copy thereof to the Contractor. The decision of the Contracting Officer shall be final and conclusive unless, within 30 days from the date of receipt of such copy, the Contractor mails or otherwise furnishes to the Contracting Officer a written appeal addressed to the Chief Executive Officer. The decision of the Chief Executive Officer or his/her duly authorized representative for the determination of such appeals shall be final and conclusive unless determined by a court of competent jurisdiction to have been fraudulent, or capricious, or arbitrary, or so grossly erroneous as necessarily to imply bad faith or is not supported by substantial evidence. In connection with any appeal proceeding under this article, the Contractor shall be awarded an opportunity to be heard and to offer evidence in support of his appeal. Pending final decision of a dispute hereunder, the Contractor shall proceed diligently with the performance of the contract and in accordance with the Contracting Officer's decision.
2. This **DISPUTES** article does not preclude consideration of questions of law in connection with decisions provided for in paragraph a. above. Nothing in this Contract, however, shall be construed as making the final decisions of the General Manger of his/her representative on a question of law.

K. Default

1. The Authority may, subject to the provisions of paragraph b. below, by written notice of default to the Contractor, terminate the whole or any part of this Contract in any one of the following circumstances:
   a. If the Contractor fails to make delivery of the supplies or to satisfactorily perform the services within the time specified herein or any extension thereof; or
   b. If the Contractor fails to perform any of the other provisions of this Contractor, or so fails to make its terms, and in either of these two circumstances does not cure such failure within a period of 10 days

(or such longer period of as the Contracting Officer may authorize in writing) after receipt of notice from the Contracting Officer specifying such failure

2. Default without the fault or negligence of the Contractor. Such causes may include, but are restricted to, acts of God or of the public enemy, acts of the Government in its sovereign capacity or the Authority in its contractual capacity, fires, floods, epidemics, quarantine restrictions, strikes, freight embargoes, and unusually severe weather; but in every case the failure to perform must be beyond the control and without the fault or negligence of the Contractor.
3. If the Contractor fails to deliver the supplies or satisfactorily perform the services within the time specified in this Contract, or any extension thereof, the actual damage to the Authority for the delay will be difficult or impossible to determine. Therefore in lieu of actual damages, the Contractor shall pay to the Authority as fixed, agreed, and liquidated damages for each calendar day of delay, the amount set forth elsewhere in this Contract. The Contractor shall not be charged with liquidated damages when the delay arises out of causes beyond the control and without the fault or negligence of the Contractor, and in such event, subject to this DISPUTES article, the Contracting Officer shall ascertain the facts and extent of the delay and shall extend the time for performance of the contract when in his judgment the findings of fact justify an extension.
4. The rights and remedies of the Authority provided in this article shall not be exclusive and are in addition to any other rights and remedies provided by law or under this Contract.

L. Termination for Convenience of the Authority

The performance of work under this Contract may be terminated by the Authority in accordance with this article in whole, or from time to time in part, whenever the Contracting Officer shall determine that such termination is in the best interest of the Authority. Any such termination shall be affected by delivery to the Contractor of a Notice of Termination specifying the extent to which performance of work under the contract is terminated, and the date upon which such termination becomes effective.

After receipt of a Notice of Termination, the Contractor shall submit to the Contracting Officer his termination claim, in the form and with certification prescribed by the Contracting Officer. Such claims shall be submitted promptly by in no event later than one year from the effective date of termination. Upon failure of the Contractor to submit his termination claim within the time allowed, the Contracting Officer may, subject to any review required by the contracting agency's procedures in effect as of the date of execution of this Contract, determine, on the basis of information available to him, the amount, if any, due the Contractor by reason of the termination and shall thereupon pay to the Contractor the amount so determined.

In the event of the failure of the Contractor and the Contracting Officer to agree upon the whole amount to be paid the Contractor by reason of the termination of work pursuant to this article, the Contracting Officer shall, subject to any review by the contracting agency's procedures in effect as of the date of execution of this

Contract, determine, on the basis of information available to him, the amount if any, due the Contractor by reason of the termination.

Costs claimed, agreed to , or determined pursuant to this paragraph shall be in accordance with the applicable with the applicable contract cost principles and procedures of the Federal Acquisition Regulations (48 CFR 31.1) in effect on the date of this Contract. The Contractor shall have the right to appeal, under the DISPUTES article of this Contract from any determination made by the Contracting Officer, except that, if the Contractor has failed to submit his claim within the time provided above and has failed to request extension of such time, he shall have no such right of appeal. Unless otherwise provided for in this Contract, or by applicable statue, the Contractor, from the effective date of termination and for a period of three years after final settlement under this Contract, shall preserve and make available to the Authority at all reasonable times at the office of the Contractor but without direct charge to the Authority, all his books, records, documents, and other evidence bearing on the costs and expenses of the Contractor under this Contract and relating to the work terminated hereunder, or, to the extent approved by the Contracting Officer, photographs, micro photographs, or other authentic reproductions thereof.

M. **Federal, State and Local Taxes**

Except as may be otherwise provided in this Contract, the Contract price includes all applicable Federal, State, and Local taxed and duties. The Authority upon the request of the Contractor shall, without further liability, furnish evidence appropriate to establish exemption from any Federal, State, or Local tax.

N. **Walsh-Healey Public Contracts Act**

If this contract is for the manufacture or furnishing of materials, supplies articles, or equipment in an amount which exceeds or may exceeds or exceed $14,000 and is otherwise subject to the Walsh-Healey Public Contract Act, as amended (41 U.S.C. 34-35), there are hereby incorporated by reference all representations and stipulations required by said Act and regulations issued thereunder by the Secretary of Labor, such representations of the Secretary of Labor which are now or may hereafter be in effect.

O. **Officials Not to Benefit**

No member, officer, or employee of the Authority during his tenure or one year thereafter shall have any interest, direct or indirect, in this Contract or the proceeds thereof.

P. **Covenant against Contingent Fees**

The Contractor warrants that no person or selling agency has been employed or retained to solicit or secure this Contract upon an agreement or understanding for a commission, percentage, brokerage, or contingent fee, excepting bona fide employees or bona fide established commercial or selling agencies maintained by the Contractor for the purpose of securing business. For breach or violation of this warranty, the Authority shall have the right to annul this Contract without liability or in its discretion, to full amount of such commission, percentage, brokerage, or contingent fee.

Q. **Notice to the Authority of Labor Disputes**

Whenever the Contractor has knowledge that any or potential labor disputes is delaying or threatens to delay the timely performance of this Contract, the Contractor shall immediately give notice thereof, including all relevant information with respect thereto, to the Contracting Officer. The Contractor agrees to insert the

substance of this clause, in any subcontract hereunder as to which a labor dispute may delay the timely performance of this Contract; except that each such subcontract shall provide that in the event its timely performance is delayed or threatened by delay by any actual or potential labor dispute, the subcontractor shall immediately notify his next higher tier subcontractor, or the Contractor, as the case may be, of all relevant information with respect to such dispute.

R. Patent Indemnity

1. If the amount of this Contract is in excess of $10,000, the Contractor shall indemnify the Authority and its officers, agents, and employees against liability, including costs, for infringement of any United States letters patent arising out of the manufacture or delivery of supplies under this Contract.
2. In addition, if specifically requested by the Contracting Officer prior to execution of the Contract, a copy of the current license agreement and identification of applicable claims of specific patents shall be furnished.

S. Use of Trade Names

Any trade names used in this document are merely used for a point of reference. The Authority will consider submission of approved equals on any or all products specified. Use of trade names by the Authority bears no actual or implicit approval for the violation of any current or pending patents or copyrights.

T. Rights in Technical Data

1. The Authority shall have the right to use, duplicate or disclose technical data, which includes computer software, in whole or in part, in any manner and for any purpose whatsoever, and to have or permit others to do so:
   a. Any manuals, instructional materials prepared for installation, operation, maintenance, or training purposes.
   b. Technical data pertaining to end items, components or processes which were prepared for the purpose of identifying sources, size, configuration, mating and attachment characteristics, functional characteristics and performance requirements ("for, fit and function: data; e/g/ specification control drawing, catalog sheets, outline drawing; except that for computer software it means data identifying source, functional characteristics, and performance requirements but specifically excludes the source code, algorithm, process, formulae, and flow charts of the software);
   c. Other technical data which has been or is normally furnished without restriction by the Contractor or subcontractor.
   d. Other specifically described technical data, which the parties have agreed will be furnished without restriction.
2. The Authority shall have the right to use, duplicate, or disclose technical data other than that defined in paragraph a. in whole or in part, with the express limitation that such technical data shall not, without the written permission of the party furnishing such technical data, be.
   a. released or disclosed in part by the Authority for manufacture, or
   b. used in whole or in part by the Authority for manufacture, or
   c. used by a party other than the Authority except for emergency repair or overhaul work only, by or for the Authority where the item or process concerned is not otherwise reasonably available to enable timely performance of the work; provided, that the release or

disclosure thereof outside the Authority shall be made subject to a prohibition against further use, release, or disclosure.

3. Technical data provided in accordance with the provisions of paragraph b. shall be identified by a legend, which suitably recites the aforesaid limitation. Nothing herein shall impair the right of the Authority to use similar or identical data acquired from other sources.
4. The term technical data as used in this article means technical writing, computer software, sound recording, pictorial reproductions, drawings, or other representations and works of a technical nature, whether or not copyrighted, which are specified to be delivered pursuant to this Contract. The term does not include financial reports, cost analysis, and other information incidental to Contract administration. Computer software as used in this article means computer programs, computer databases, and documentation.
5. Material covered by copyright:
   a. The Contractor agrees to and does hereby grant to the Authority, and to its officers, agents and employees acting within the scope of their official duties, a royalty-free, nonexclusive, and irrevocable license throughout the world for Authority purposes to publish, translate, reproduce, deliver, perform, dispose of, and to authorize others to do so, all technical data now or hereafter covered by copyright.
   b. No such copyright matter shall be included in technical data furnished hereunder without the written permission of the copyright owner for the Authority (or higher-tier contractor) promptly and in reasonable written detail each notice or claim of copyright infringement received by the Contractor with respect to any technical data delivered hereunder.
6. Relation to patents: Nothing contained in this article shall imply a license to the Authority under any patent or be construed as affecting the scope of any license or other right otherwise granted to the Authority under any patent.
7. Any dispute under this article shall be subject to the Disputes article of this contract

U. Audit and Inspection of Records

The Contractor shall maintain records, and the Contracting Officer, the State of Rhode Island, the U.S. Department of Transportation, and the Comptroller General of the United States or any of their duly authorized representatives shall, until the expiration of three years after final payment under this Contract, have access to and the right to examine any directly pertinent books, documents, papers and records of such contractor, involving transactions related to the Contract, for the purpose of making audit, examination, excerpts and transactions.

The Contractor further agrees to include in all his subcontracts hereunder a provision to the effect that the subcontractor agrees that the Contracting Officer, the State of Rhode Island, the U.S. Department of Transportation and the Comptroller General of the United States or any of their Duly authorized representatives shall, until the expiration of three years after final payment under the Contract, have access to and the right to examine any directly pertinent books, documents, papers and records of such subcontractor, involving transactions related to the subcontract, for the purpose of making audit, examination, excerpts and transcription.

V. Gratuities

In connection with performance of work required under this Contract, or any changes or modifications relative thereto, the giving of or offering to give gratuities (in the form of entertainment, gifts or otherwise) by the Contractor, or any agent, representative or other person deemed to be acting on behalf of the Contractor, or any supplier or subcontractor furnishing material to or performing work under this Contract, or agent, representative or other person deemed to be acting on behalf of such supplier or subcontractor, to any Director, Officer or employee of the Authority; or to any Director, employee or agent of any of the Authority's agents, consultants, representatives or other persons deemed to be acting for or on behalf of the Authority with a view toward securing a contract or securing favorable treatment with respect to the awarding to the awarding or amending, or the making of any determinations with respect to the performing of such contract is expressly forbidden. The terms of this GRATUITIES article shall be strictly construed and enforced in the event of violations hereto.

W. Limitation on Withholding Payments

If more than one article or schedule provision of this Contract authorized the temporary withholding of amounts otherwise payable to the Contractor for supplies delivered or services performed, the total of the amounts so withheld at any one time shall not exceed the greatest amount which may be withheld under any one such article or schedule provision at that time; provided, that this limitation shall not apply to:

1. Withholdings pursuant to any clause relating to wages or hours of employees.
2. Withholdings not specifically provided for by this Contract; and
3. The recovery of overpayment.

X. New Material

The Contractor represents that the supplies and components to be provided under this Contract are new (not used or reconditioned, and not of such age or so deteriorated as to impair their usefulness or safety).

Y. Order of Precedence

In the event of an inconsistency in the Contract, unless otherwise provided herein, the inconsistency shall be resolved by giving precedence in the following order:

1. The Proposal Schedule.
2. Special Conditions.
3. General Provisions.
4. The other provisions of the Contract, whether incorporated by reference or otherwise.
5. The Specifications; and
6. Drawings.

Z. Correction of Deficiencies

1. Definitions:

As used in this article:

a. Deficiency means any condition or characteristics in any supplies (which term shall include related technical data) or services furnished hereunder, which is not in compliance with the requirements of this Contract.

b. Correction means any and all actions necessary to eliminate any and all deficiencies.

c. Supplies mean the end item(s) furnished by the Contractor and related services required under this Contract.

2. General:

a. The rights and remedies of the Authority shall not be affected in any way by any other provisions under this Contract concerning the conclusiveness of inspection and acceptance.

b. The Contractor shall not be responsible under this article for the correction of deficiencies caused by the Authority. These shall be no extension in time for performance; no increase in contract price for the correction of deficiencies that are the responsibility of the Contractor, his suppliers, and/or subcontractors.

3. Deficiencies in accepted supplies or services:

If the Contracting Officer determines that a deficiency exists in any of the supplies or services accepted by the Authority under this Contract, he shall promptly notify the Contractor of the deficiency, in writing, within 30 days. Upon timely notification of the existence of such a deficiency, or if the Contractor independently discovers a deficiency in accepted supplies or services, the Contractor shall promptly submit to the Contracting Officer his recommendation for corrective actions, together with supporting information in sufficient detail for the Contracting Officer to determine what corrective action, if any, shall be undertaken.

4. Correction of Deficiencies by Contractor:

The Contractor shall promptly comply with any timely written direction by the Contracting Officer to correct or partially correct a deficiency, at no increase in the Contract price. The Contractor shall also prepare and furnish to the Authority data and reports applicable to any correction required under this article (including revision and updating of all other affected data called for under this Contract) at no increase in the Contract price.

5. Deficiencies in supplies or services not yet accepted:

If the Contractor becomes aware at any time before acceptance by the Authority (whether before or after tender to the Authority) that a deficiency exists in any supplies or services, he shall promptly correct the deficiency or, if he elects to invoke the procedures in paragraph c. above, he shall promptly communicate information concerning the deficiency to the Contracting Officer, in writing, together with his detailed recommendation for corrective action.

6. Extensions or Delays

In no event shall the Authority be responsible for extension or delays in the scheduled deliveries or periods of performance under this Contract as a result of the Contractor's obligations to correct deficiencies, nor shall there be any adjustment of delivery schedule or period of performance as a result of corrections of deficiencies, except as may be agreed to by the Authority in a supplemental agreement with adequate consideration.

7. Contract Price

It is hereby specifically recognized and agreed by the parties hereto that this article shall not be construed as obligating the Authority to increase the Contract price of this Contract.

8. Failure to correct:

If the Contractor fails or refuses to promptly rectify the deficiency the Contracting Officer shall give the Contractor written notice specifying the failure or refusal and setting a period after receipt of the notice within which it must be cured. If the failure or refusal is not cured within the specified period, the Contracting Officer may, by contract or otherwise, as required:

a. Obtain detailed recommendations for corrective action.
b. Correct the supplies or services, or
c. Replace the supplies or services; and if the Contractor fails to furnish timely disposition instructions, the Contracting Officer may dispose of nonconforming supplies for the Contractor's account in a reasonable manner, in which case the Authority is entitled to reimbursement from the Contractor or from the proceeds for the reasonable expenses of case and disposition, as well as for excess costs incurred or to be incurred; and
d. Obtain applicable data and reports; and charge to the Contractor the cost occasioned the Authority thereby.
e. Impose Liquidated Damages in accordance the terms of this document.
f. Terminate the contract. Termination of contract by RIPTA does not relieve the contractor of any liquidated damages imposed by the Authority.

AA. Assignment

1. The Contractor shall not transfer the rights and obligations of the Contract to third parties without the prior written approval of the Authority's Contracting Officer. After review of facts and circumstances without exception, the assignment shall not be approved unless the surety, in writing, agrees to that assignment and accepts the assignee as the Contractor and principal on the payment and/or performance bonds.
2. If this Contract provides for payments aggregating $1,000 or more, claims for monies due or to become due the Contractor from the Authority under this Contract may be assigned to a bank, trust company, or other financing institution, including any Federal lending agency, any may thereafter by further assigned and reassigned to any institution. (Notice of such assignment shall be made to the Authority.) Any such assignment or reassignment shall cover all amounts payable under this Contract and not already paid and shall not be made to more than one party, except that any such assignment or reassignment or reassignment may be made to one party as agent or trustee for two or more parties participating in such financing. It is the Authority's intent to recognize only bona fide lending institutions, therefore, assignment to any private corporation, business or individual, which does not qualify as such, is specifically prohibited.
3. Any attempt to transfer by assignment not authorized by this article shall constitute a breach of the Contract and the Authority may for such cause terminate the right of the Contractor to proceed as provided in the DEFAULT article of these General Provisions, and the Contractor and his sureties shall be liable to the Authority for any excess costs incurred by the Authority.

4. The Rhode Island Public Transit Authority may assign some or all of its rights to purchase the items specified in this contract to one or more third parties, provided, however, that nay such assignment shall not relieve RIPTA of its obligations under this contract unless otherwise agreed to by Contractor in writing.

BB. Certificates of Current Cost or Pricing Data

The Contractor shall provide a Certificate of Current Cost or Pricing Data as required in Subpart 15.804 of the Federal Acquisition Regulations (48 CFR 15.804) in support of any negotiated contract expected to exceed $100,000 any modification to a formally advertised or negotiated contract on which the aggregate of the increase and decrease in cost are expected to exceed $100,000; the Contracting Officer at his discretion may request cost or pricing data for modifications on which cost are $100,000 or less and an attendant certificate of current cost or pricing data.

CC. Cargo Preference

Use of United States Flag Vessels

Pursuant to Pub. L 664 (56 U.S.C. 1241 (b)):

"Cargo Preference-Use of United States-Flag Vessels

The Contractor agrees.

1. To utilize privately owned United States-flag commercial vessels to ship at least 50 percent of the gross tonnage (computed separately for dry bulk cargo liners, and tankers) involved, whenever shipping any equipment, materials, or commodities pursuant to this Contract, to the extent such vessels are available at fair and reasonable rates for United States-flag commercial vessels.
2. To furnish within 20 days following the date of loading for shipments originating within the United States, or within 30 working days following the date of loading for shipments originating outside the United States, a legible copy of a rated, "on-board" commercial ocean bill-of-lading in English for each shipment of cargo described in paragraph (1) above to the Grantee (through the prime Contractor in the care of subcontractor bills-of lading) and to the Division of National Cargo, Officer of Market Development, Maritime Administration, Washington, D.C. 20230, marked with appropriate identification of the Project.
3. To insert the substance of the provisions of this clause in all subcontracts issued pursuant to this Contract.

DD. Buy America Act

The Contractor agrees to comply with 49 U.S.C. §533(j), and its implementing regulations at 49 C.F.R. Part 661, any amendments thereto, and any implementing guidelines issued by FTA.

“Construction materials used in projects are subject to the domestic preference requirement of the Build America, Buy America Act, Pub. L. 117-58, div. G, tit. IX, 70911 70927 (2021), as implemented by the U.S. Office of Management and Budget, the U.S. Department of Transportation, and FTA. The Recipient acknowledges that this agreement is neither a waiver of 70914(a) nor a finding under 70914(b).”

EE. Equal Opportunity

1. **Race, Color, Creed, National Origin, Sex.**
In accordance with Title VII of the Civil Rights Act, as amended, 42 U.S.C. § 2000e, and Federal transit laws at 49 U.S.C. § 5332, the Contractor agrees to comply with all applicable equal employment opportunity requirements of U.S. Department of Labor (U.S. DOL) regulations, " Office of Federal Contract Compliance Programs, Equal Employment Opportunity, Department of Labor," 41 CFR Parts 60 et seq., (which implements Executive Order No. 11246, "Equal Employment Opportunity," as amended by Executive Order No. 11375, "Amending Executive Order 11246 Relating to Equal Employment Opportunity," 42 U.S.C. § 2000e note), and with any applicable Federal statutes, executive orders regulations, and Federal policies that may in the future affect construction activities undertaken in the course of the Project. The Contractor agrees to take affirmative action to ensure that applicants are employed, and that employees are treated during employment, without regard to their race, color religion, sex, or national origin. Such action shall include, but not be limited to, the following: employment, promotion, demotion or transfer, recruitment or recruitment advertising, layoff, or termination; rates of pay or other forms of compensation; and selection for training, including apprenticeship. In addition, the Contractor agrees to comply with any implementing requirements FTA may issue.

2. **Age**
In accordance with section 4 of the Age Discrimination in Employment Act of 1967, as amended, 29, U.S.C. § 623 and Federal Transit Law at 49 U.S.C. § 5332, the Contractor agrees to refrain from discrimination against present and prospective employees for reason of age. In addition, the Contractor agrees to comply with any implementing requirements FTA may issue.

3. **Disabilities**
In accordance with section 102 of the Americans with Disabilities Act, as amended, 42 U.S.C. § 12112, the Contractor agrees that it will comply with the requirements of U.S. Equal Employment Opportunity Commission, "Regulations to Implement the Equal Employment Provisions of the Americans with Disabilities Act," 29 CFR Part 1630, pertaining to employment of persons with disabilities. In addition, the Contractor agrees to comply with any implementing requirements FTA may issue.

The contractor also agrees to include these requirements in each subcontract financed in whole or in part with Federal assistance provided by FTA, modified only if necessary to identify the affected parties.

FF. Nondiscrimination under Federal Grants

In accordance with Title VI of the Civil Rights Act, as amended, 42 U.S.C. §2000d, section 303 of the Age Discrimination Act of 1975, as amended, 42 U.S.C. §6102, section 202 of the Americans with Disabilities Act of 1990, 42 U.S.C. § 12132, and Federal transit law at 49 U.S.C. § 5332, the Contractor agrees that it shall not discriminate against any employee or applicant for employment because of race, color,, religion, age, national origin, sexual orientation, disability, gender identity or expression or veteran status. In addition, the Contractor agrees to comply with applicable Federal implementing regulations and other implementing requirements FTA may issue.

GG. Rights in Data and Copyrights-FTA (June 1996)

The term "subject data" used in this section means recorded information, whether or not copyrighted, that is delivered or specified to be delivered under this contract. The term includes graphic or pictorial delineation in media such as drawings or photographs; text in specifications or related performance or design-type documents; machine forms such as punched cards, magnetic tape, or computer memory printouts; and information retained in computer memory. Examples include, but are not limited to computer software, engineering drawings and associated lists, specifications, standards, process sheets, manuals, technical reports, catalog item identifications, and related information. The term "subject data" does not include financial reports, cost analyses, and similar information incidental to Project administration.

When the Federal Transit Administration (FTA) provides financial assistance for a planning, research, development, or a demonstration project, it is FTA's general intention to increase mass transportation knowledge, rather than limit the benefits of the Project to participants in the Project. Therefore, unless FTA determines otherwise, the Contractor agrees that FTA may make available to any FTA recipient, sub-recipient, third party contractor, or third-party subcontractor, either FTA's license in the copyright to the subject data derived under this contract or a copy of the subject data as defined in subsection a. of this clause and shall be delivered as the Government may direct. Unless prohibited by state law, the Contractor agrees to indemnify, save, and hold harmless RIPTA and the Government, their officers, agents, and employees acting within the scope of their official duties against any liability, including costs and expenses, resulting from any willful or intentional violation by the contractor of proprietary rights, copyrights, or right of privacy, arising out of the publication, translation, reproduction, delivery, use, or disposition of any data furnished under this Contract. The Contractor shall not be required to indemnify RIPTA and the Government for any such liability arising out of the wrongful acts of employees or agents of RIPTA and the Government.

HH. Davis-Bacon Act

40 USC &167; 276a -276a-5 (1998) 29 CFR § 5 (1999)

1. Minimum wages

a. All laborers and mechanics employed or working upon the site of the work (or under the United States Housing Act of 1937 or under the Housing Act of 1949 in the construction or development of the project), will be paid unconditionally and not less often than once a week, and without subsequent deduction or rebate on any account (except such payroll deductions as are permitted by regulations issued by the Secretary of Labor under the Copeland Act (29 CFR part 3)), the full amount of wages and bona fide fringe benefits (or cash equivalents thereof) due at time of payment computed at rates not less than those contained in the wage determination of the Secretary of Labor which is attached hereto and made a part hereof, regardless of any contractual relationship which may be alleged to exist between the contractor and such laborers and mechanics.

Contributions made or costs reasonably anticipated for bona fide fringe benefits under section 1(b)(2) of the Davis-Bacon Act on behalf of laborers or mechanics are considered wages paid to such laborers

or mechanics, subject to the provisions of paragraph (1)(iv) of this section; also, regular contributions made or costs incurred for more than a weekly period (but not less often than quarterly) under plans, funds, or programs which cover the particular weekly period, are deemed to be constructively made or incurred during such weekly period. Such laborers and mechanics shall be paid the appropriate wage rate and fringe benefits on the wage determination for the classification of work actually performed, without regard to skill, except as provided in 29 CFR Part 5.5(a)(4). Laborers or mechanics performing work in more than one classification may be compensated at the rate specified for each classification for the time actually worked therein: Provided that the employer's payroll records accurately set forth, the time spent in each classification in which work is performed. The wage determination and the Davis-Bacon poster (WH-1321) shall be posted at all times by the contractor and its subcontractors at the site of the work in a prominent and accessible place where it can be easily seen by the workers.

b. The contracting officer shall require that any class of laborers or mechanics, including helpers, which is not listed in the wage determination, and which is to be employed under the contract shall be classified in conformance with the wage determination. The contracting officer shall approve an additional classification and wage rate and fringe benefits therefore only when the following criteria have been met:

   i. Except with respect to helpers as defined as 29 CFR 5.2(n)(4), the work to be performed by the classification requested is not performed by a classification in the wage determination; and

   ii. The classification is utilized in the area by the construction industry; and

   iii. The proposed wage rate, including any bona fide fringe benefits, bears a reasonable relationship to the wage rates contained in the wage determination; and

   iv. With respect to helpers as defined in 29 CFR 5.2(n) (4), such a classification prevails in the area in which the work is performed.

c. If the contractor and the laborers and mechanics to be employed in the classification (if known), or their representatives, and the contracting officer agree on the classification and wage rate (including the amount designated for fringe benefits where appropriate), a report of the action taken shall be sent by the contracting officer to the Administrator of the Wage and Hour Division, Employment Standards Administration, U.S. Department of Labor, Washington, DC 20210. The Administrator, or an authorized representative, will approve, modify, or disapprove every additional classification action within 30 days of receipt and so advise the contracting officer or will notify the contracting officer within the 30-day period that additional time is necessary.

d. In the event the contractor, the laborers, or mechanics to be employed in the classification or their representatives, and the contracting officer do not agree on the proposed classification and wage rate (including the amount designated for fringe benefits, where appropriate), the contracting officer shall refer the questions, including the views of all interested parties and the recommendation of the contracting officer, to the Administrator for determination. The Administrator, or an authorized representative, will issue a determination within 30 days of receipt and so advise the contracting officer or will notify the contracting officer within the 30-day period that additional time is necessary.

e. The wage rate (including fringe benefits where appropriate) determined pursuant to paragraphs (a)(1)(ii) (B) or (C) of this section, shall be paid to all workers performing work in the classification under this contract from the first day on which work is performed in the classification.

f. Whenever the minimum wage rate prescribed in the contract for a class of laborers or mechanics includes a fringe benefit, which is not expressed as an hourly rate, the contractor shall either pay the benefit as stated in the wage determination or shall pay another bona fide fringe benefit or an hourly cash equivalent thereof.

g. If the contractor does not make payments to a trustee or other third person, the contractor may consider as part of the wages of any laborer or mechanic the amount of any costs reasonably anticipated in providing bona fide fringe benefits under a plan or program, Provided, That the Secretary of Labor has found, upon the written request of the contractor, that the applicable standards of the Davis-Bacon Act have been met. The Secretary of Labor may require the contractor to set aside in a separate account asset for the meeting of obligations under the plan or program.

h. The contracting officer shall require that any class of laborers or mechanics which is not listed in the wage determination, and which is to be employed under the contract shall be classified in conformance with the wage determination. The contracting officer shall approve an additional classification and wage rate and fringe benefits therefore only when the following criteria have been met:

   i. The work to be performed by the classification requested is not performed by a classification in the wage determination; and

   ii. The classification is utilized in the area by the construction industry; and

   iii. The proposed wage rate, including any bona fide fringe benefits, bears a reasonable relationship to the wage rates contained in the wage determination.

i. If the contractor and the laborers and mechanics to be employed in the classification (if known), or their representatives, and the contracting officer agree on the classification and wage rate (including the amount designated for fringe benefits where appropriate), a report of the action taken shall be sent by the

contracting officer to the Administrator of the Wage and Hour Division, Employment Standards Administration, Washington, DC 20210. The Administrator, or an authorized representative, will approve, modify, or disapprove every additional classification action within 30 days of receipt and so advise the contracting officer or will notify the contracting officer within the 30-day period that additional time is necessary.

j. In the event the contractor, the laborers, or mechanics to be employed in the classification or their representatives, and the contracting officer do not agree on the proposed classification and wage rate (including the amount designated for fringe benefits, where appropriate), the contracting officer shall refer the questions, including the views of all interested parties and the recommendation of the contracting officer, to the Administrator for determination. The Administrator, or an authorized representative, will issue a determination with 30 days of receipt and so advise the contracting officer or will notify the contracting officer within the 30-day period that additional time is necessary.

k. The wage rate (including fringe benefits where appropriate) determined pursuant to paragraphs (a)(1)(v) (B) or (C) of this section, shall be paid to all workers performing work in the classification under this contract from the first day on which work is performed in the classification.

2. Withholding

The Rhode Island Public Transit Authority shall upon its own action or upon written request of an authorized representative of the Department of Labor withhold or cause to be withheld from the contractor under this contract or any other Federal contract with the same prime contractor, or any other federally-assisted contract subject to Davis-Bacon prevailing wage requirements, which is held by the same prime contractor, so much of the accrued payments or advances as may be considered necessary to pay laborers and mechanics, including apprentices, trainees, and helpers, employed by the contractor or any subcontractor the full amount of wages required by the contract. In the event of failure to pay any laborer or mechanic, including any apprentice, trainee, or helper, employed or working on the site of the work (or under the United States Housing Act of 1937 or under the Housing Act of 1949 in the Rhode Island Public Transit Authority may, after written notice to the contractor, sponsor, applicant, or owner, take such action as may be necessary to cause the suspension of any further payment, advance, or guarantee of funds until such violations have ceased.

3. Payrolls and basic records

a. Payrolls and basic records relating thereto shall be maintained by the contractor during the course of the work and preserved for a period of three years thereafter for all laborers and mechanics working at the site of the work (or under the United States Housing Act of 1937, or under the Housing Act of 1949, in the construction or development of the project). Such records shall contain the name, address, and social security number of each such worker, his or her correct classification, hourly rates of wages paid (including rates of

contributions or costs anticipated for bona fide fringe benefits or cash equivalents thereof of the types described in section 1(b) (2) (B) of the Davis-Bacon Act), daily and weekly number of hours worked, deductions made, and actual wages paid. Whenever the Secretary of Labor has found under 29 CFR 5.5(a)(1)(iv) that the wages of any laborer or mechanic include the amount of any costs reasonably anticipated in providing benefits under a plan or program described in section 1(b)(2)(B) of the Davis-Bacon Act, the contractor shall maintain records which show that the commitment to provide such benefits is enforceable, that the plan or program is financially responsible, and that the plan or program has been communicated in writing to the laborers or mechanics affected, and records which show the costs anticipated or the actual cost incurred in providing such benefits. Contractors employing apprentices or trainees under approved programs shall maintain written evidence of the registration of apprenticeship programs and certification of trainee programs, the registration of the apprentices and trainees, and the ratios and wage rates prescribed in the applicable programs.

b. i. The contractor shall submit weekly for each week in which any contract work is performed a copy of all payrolls to the Rhode Island Public Transit Authority for transmission to the Federal Transit Administration. The payrolls submitted shall set out accurately and completely all of the information required to be maintained under 29 CFR part 5. This information may be submitted in any form desired. Optional Form WH-347 is available for this purpose and may be purchased from the Superintendent of Documents (Federal Stock Number 029-005-00014-1), U.S. Government Printing Office, Washington, DC 20402. The prime contractor is responsible for the submission of copies of payrolls by all subcontractors.

ii. Each payroll submitted shall be accompanied by a "Statement of Compliance," signed by the contractor or subcontractor or his or her agent who pays or supervises the payment of the persons employed under the contract and shall certify the following:

(1) That the payroll for the payroll period contains the information required to be maintained under 29 CFR part 5 and that such information is correct and complete.

(2) That each laborer or mechanic (including each helper, apprentice, and trainee) employed on the contract during the payroll period has been paid the full weekly wages earned, without rebate, either directly or indirectly, and that no deductions have been made either directly or indirectly from the full wages earned, other than permissible deductions as set forth in Regulations, 29 CFR part 3.

(3) That each laborer or mechanic has been paid not less than the applicable wage rates and fringe benefits or cash equivalents for the classification of work performed, as

specified in the applicable wage determination incorporated into the contract.

c. The weekly submission of a properly executed certification set forth on the reverse side of Optional Form WH-347 shall satisfy the requirement for submission of the "Statement of Compliance" required by paragraph (a)(3)(ii)(B) of this section.

d. The falsification of any of the above certifications may subject the contractor or subcontractor to civil or criminal prosecution under section 1001 of title 18 and section 231 of title 31 of the United States Code.

The contractor or subcontractor shall make the records required under paragraph (a)(3)(i) of this section available for inspection, copying, or transcription by authorized representatives of the Federal Transit Administration or the Department of Labor, and shall permit such representatives to interview employees during working hours on the job. If the contractor or subcontractor fails to submit the required records or to make them available, the Federal agency may, after written notice to the contractor, sponsor, applicant, or owner, take such action as may be necessary to cause the suspension of any further payment, advance, or guarantee of funds. Furthermore, failure to submit the required records upon request or to make such records available may be grounds for debarment action pursuant to 29 CFR 5.12.

4. Apprentices and trainees

a. Apprentices - Apprentices will be permitted to work at less than the predetermined rate for the work they performed when they are employed pursuant to and individually registered in a bona fide apprenticeship program registered with the U.S. Department of Labor, Employment and Training Administration, Bureau of Apprenticeship and Training, or with a State Apprenticeship Agency recognized by the Bureau, or if a person is employed in his or her first 90 days of probationary employment as an apprentice in such an apprenticeship program, who is not individually registered in the program, but who has been certified by the Bureau of Apprenticeship and Training or a State Apprenticeship Agency (where appropriate) to be eligible for probationary employment as an apprentice. The allowable ratio of apprentices to journeymen on the job site in any craft classification shall not be greater than the ratio permitted to the contractor as to the entire work force under the registered program. Any worker listed on a payroll at an apprentice wage rate, who is not registered or otherwise employed as stated above, shall be paid not less than the applicable wage rate on the wage determination for the classification of work actually performed. In addition, any apprentice performing work on the job site in excess of the ratio permitted under the registered program shall be paid not less than the applicable wage rate on the wage determination for the work actually performed. Where a contractor is performing construction on a project in a locality other than that in

which its program is registered, the ratios and wage rates (expressed in percentages of the journeyman's hourly rate) specified in the contractor's or subcontractor's registered program shall be observed. Every apprentice must be paid at not less than the rate specified in the registered program for the apprentice's level of progress, expressed as a percentage of the journeymen hourly rate specified in the applicable wage determination. Apprentices shall be paid fringe benefits in accordance with the provisions of the apprenticeship program. If the apprenticeship program does not specify fringe benefits, apprentices must be paid the full amount of fringe benefits listed on the wage determination for the applicable classification. If the Administrator of the Wage and Hour Division of the U.S. Department of Labor determines that a different practice prevails for the applicable apprentice classification, fringes shall be paid in accordance with that determination. In the event the Bureau of Apprenticeship and Training, or a State Apprenticeship Agency recognized by the Bureau, withdraws approval of an apprenticeship program, the contractor will no longer be permitted to utilize apprentices at less than the applicable predetermined rate for the work performed until an acceptable program is approved.

b. Trainees - Except as provided in 29 CFR 5.16, trainees will not be permitted to work at less than the predetermined rate for the work performed unless they are employed pursuant to and individually registered in a program which has received prior approval, evidenced by formal certification by the U.S. Department of Labor, Employment and Training Administration. The ratio of trainees to journeymen on the job site shall not be greater than permitted under the plan approved by the Employment and Training Administration. Every trainee must be paid at not less than the rate specified in the approved program for the trainee's level of progress, expressed as a percentage of the journeyman hourly rate specified in the applicable wage determination. Trainees shall be paid fringe benefits in accordance with the provisions of the trainee program. If the trainee program does not mention fringe benefits, trainees shall be paid the full amount of fringe benefits listed on the wage determination unless the Administrator of the Wage and Hour Division determines that there is an apprenticeship program associated with the corresponding journeyman wage rate on the wage determination which provides for less than full fringe benefits for apprentices. Any employee listed on the payroll at a trainee rate who is not registered and participating in a training plan approved by the Employment and Training Administration shall be paid not less than the applicable wage rate on the wage determination for the classification of work actually performed. In addition, any trainee performing work on the job site in excess of the ratio permitted under the registered program shall be paid not less than the applicable wage rate on the wage determination for the work actually performed. In the event the Employment and Training Administration withdraws approval of a training program, the contractor will no longer be permitted to

utilize trainees at less than the applicable predetermined rate for the work performed until an acceptable program is approved.

c. Equal employment opportunity - The utilization of apprentices, trainees and journeymen under this part shall be in conformity with the equal employment opportunity requirements of Executive Order 11246, as amended and 29 CFR part 30.

5. Compliance with Copeland Act requirements

The contractor shall comply with the requirements of 29 CFR part 3, which are incorporated by reference in this contract.

6. Subcontracts

The contractor or subcontractor shall insert in any subcontracts the clauses contained in 29 CFR 5.5(a)(1) through (10) and such other clauses as the Federal Transit Administration may by appropriate instructions require, and also a clause requiring the subcontractors to include these clauses in any lower tier subcontracts. The prime contractor shall be responsible for the compliance by any subcontractor or lower tier subcontractor with all the contract clauses in 29 CFR 5.5.

7. Contract termination: debarment

A breach of the contract clauses in 29 CFR 5.5 may be grounds for termination of the contract, and for debarment as a contractor and a subcontractor as provided in 29 CFR 5.12.

8. Compliance with Davis-Bacon and related Act requirements

All rulings and interpretations of the Davis-Bacon and Related Acts contained in 29 CFR parts 1, 3, and 5 are herein incorporated by reference in this contract.

9. Disputes concerning labor standards.

Disputes arising out of the labor standards provisions of this contract shall not be subject to the general disputes clause of this contract. Such disputes shall be resolved in accordance with the procedures of the Department of Labor set forth in 29 CFR parts 5, 6, and 7. Disputes within the meaning of this clause include disputes between the contractor (or any of its subcontractors) and the contracting agency, the U.S. Department of Labor, or the employees or their representatives.

10. Certification of eligibility.

a. By entering into this contract, the contractor certifies that neither it (nor he or she) nor any person or firm who has an interest in the contractor's firm is a person or firm ineligible to be awarded Government contracts by virtue of section 3(a) of the Davis-Bacon Act or 29 CFR 5.12(a)(1).

b. No part of this contract shall be subcontracted to any person or firm ineligible for award of a Government contract by virtue of section 3(a) of the Davis-Bacon Act or 29 CFR 5.12(a)(1).

c. The penalty for making false statements is prescribed in the U.S. Criminal Code, 18 U.S.C. 1001

II. Contract Work Hours and Safety Standards Act

40 U.S.C. 327-333 (1995) 29C.F.R. 5 (1995) 29 C.F.R. 1926 (1995)

1. **Overtime requirements**
No contractor or subcontractor contracting for any part of the contract work which may require or involve the employment of laborers or mechanics shall require or permit any such laborer or mechanic in any workweek in which he or she is employed on such to work in excess of forty hours in such workweek unless such laborers or mechanics receive compensation at a rate not less than one and one-half times the basic rate of pay for all hours worked in excess of forty hours in such workweek.

2. **Violation; liability unpaid wages; liquidated damages**
In the event of any violation of the clauses set forth in paragraph (1) of this section, the contractor, and any subcontractor responsible therefore shall be liable for the unpaid wages. In addition, such contractor and subcontractor shall be liable to the United States for liquidated damages. Such liquidated damages shall be computed with respect to each individual laborer or mechanic, including watchmen and guards, employed in violation of the clauses set forth in paragraph (1) of this section, in the sum of $10 for each calendar day on which such individual was required or permitted to work in excess of the standard workweek of forty hours without payment of the overtime wages required by the clauses set forth in paragraph (1) of this section.

3. **Withholding for unpaid wages; liquidated damages**
The Rhode Island Public Transit Authority shall upon its own action or upon written request of an authorized representative of the Department of Labor withhold or cause to be withheld, from any moneys payable on account of work performed by the contractor or subcontractor under any such contract or any other Federal contract with the same prime contractor, or any other federally-assisted contract subject to the Contract Work Hours and Safety Standards Act, which is held by the same prime contractor, such sums as may be determined to be necessary to satisfy any liabilities of such contractor or subcontractor for unpaid wages and liquidated damages as provided in the clauses set forth in paragraph (2) of this section.

4. **Subcontracts**
The contractor or subcontractor shall insert in any subcontracts the clauses set forth in this section and also a clause requiring the subcontractors to include these clauses in any lower tier subcontracts. The prime contractor shall be responsible for compliance by any subcontractor or lower tier subcontractor with the clauses set forth in this section. (Section 102 non-construction contracts should also have the following provision :)

5. **Payrolls and basic records**
Payrolls and basic records relating theretoshall be maintained by the contractor during the course of the work and preserved for a period of three years thereafter for all laborers and mechanics working at the site of the work (or under the United States Housing Act of 1937, or under the Housing Act of 1949, in the construction or development of the project). Such records shall contain the nams, address, and social security number of each worker, his or her correct classification, hourly rates of wages paid (including rates of contributions or costs anticipated for bona fide fringe benefits or cash equivalents thereof of the types described in section 1(b) (2) (B) of the Davis-Bacon Act), daily and weekly number of hours worked, deductions.

Whenever the made and actual wages paid Secreary iof labor has found under 29 CFR 5.5 (a)(1)(iv) that the wages of any laborer or mechanic included the amount of any costs reasonably anticipated in providing benefits under a plan or program described in section 1(b)(2)(B) of the Davis-Beacon Act, the contractor shall maintain records which show that the commitment to provide such benefits is enforceable, that the plan or program is financially responsible, and that the plan or program has been communicated in writing to the laborers or mechanics affected, and records which show the costs anticipated or the actual cost incurred in providing such benefits. Contractors employing apprentices or trainees under approved programs shall maintain written evidence of the regisration of apprenticeship programs and certification of trainee programs, the registration of the apprentices and trainees, and the ratios and wage rates prescribed in the applicable programs.

6. Contract Work Hours and Safety Standards Act

The contractor agrees to comply with section 107 of the Contract Work Hours and Safety Standards Act, 40 U.S.C. section 333, and applicable DOL regulations, "Safety and Health Regulations for Construction" 29 C.F.R. Part 1926. Among other things, the Contractor agrees that it will not require any laborer of mechanic to work in unsanitary, hazardous, or dangerous surroundings or working conditions.

7. Subcontracts

The Contractor also agrees to include the requirements of the section in each. The term "subcontract" under this section is considered to refer to a person who agrees to perform any part of the labor or material requirements of a contract for construction, alteration, or repair. A person who undertakes to perform a portion of a contract involving the furnishing of supplies or materials will be considered a "subcontractor" under this section if the work in question involves the performance of construction work and is to be performed: (1) directly on or near the construction site, or (2) by the employer for the specific project on a customized basis. Thus, a supplier of materials, which will become an integral part of the construction, is a "subcontractor" if the supplier fabricates or assembles the goods or materials in question specifically for the construction project and the work involved may said to be construction activity. If goods or materials in question are ordinarily sold to other customers from regular inventory, the supplier is not a "subcontractor." The requirements of this section do not apply to contracts or subcontracts for the purchase of supplies or materials or articles normally available on the open market.

JJ. Seismic Safety Requirements

42 U.S.C. 7701 et seq. 49 CFR Part 41

The contractor agrees that any new building or addition to an existing building will be designed and constructed in accordance with the standards for Seismic Safety required in Department of Transportation Seismic Safety Regulations 49 CFR Part 41 and will certify to compliance to the extent required by the regulation. The contractor also agrees to ensure that all work performed under this contract including work performed by a subcontractor is in compliance with the standards

required by the Seismic Safety Regulations and the certification of compliance issued on the project.

KK. Energy Conservation Requirements

42 U.S.C. 6321 et seq. 49 CFR Part 18

The contractor agrees to comply with mandatory standards and policies relating to energy efficiency, which are contained in the state energy conservation plan issued in compliance with the Energy Policy and Conservation Act.

LL. Clean Air

42 U.S.C. 7401 et Seq 40 CFR 15.61 49 CFR Part 18

1 The Contractor agrees to comply with all applicable standards, orders or regulations issued pursuant to the Clean Air Act, as amended, 42 U.S.C. §§ 7401 et Seq . The Contractor agrees to report each violation to the Purchaser and understands and agrees that the Purchaser will, in turn, report each violation as required to assure notification to FTA and the appropriate EPA Regional Office.

2. The Contractor also agrees to include these requirements in each subcontract exceeding $100,000 financed in whole or in part with Federal assistance provided by FTA.

MM. Clean Water

1 The Contractor agrees to comply with all applicable standards, orders or regulations issued pursuant to the Federal Water Pollution Control Act, as amended, 33 U.S.C. 1251 et Seq. The Contractor agrees to report each violation to the Purchaser and understands and agrees that the Purchaser will, in turn, report each violation as required to assure notification to FTA and the appropriate EPA Regional Office.

2 The Contractor also agrees to include these requirements in each subcontract exceeding $100,000 financed in whole or in part with Federal assistance provided by FTA.

NN. Recovered Materials

The contractor agrees to comply with all the requirements of Section 6002 of the Resource Conservation and Recovery Act (RCRA), as amended (42 U.S.C. 6962), including but not limited to the regulatory provisions of 40 CFR Part 247, and Executive Order 12873, as they apply to the procurement of the items designated in Subpart B of 40 CFR Part 247.

OO. Fly America Requirements

The Contractor agrees to comply with 49 U.S.C. 40118 (the "Fly America" Act) in accordance with the General Services Administration's regulations at 41 CFR Part 301-10, which provide that recipients and sub-recipients of Federal funds and their contractors are required to use U.S. Flag air carriers for U.S Government-financed international air travel and transportation of their personal effects or property, to the extent such service is available, unless travel by foreign air carrier is a matter of necessity, as defined by the Fly America Act. The Contractor shall submit, if a foreign air carrier was used, an appropriate certification or memorandum adequately explaining why service by a U.S. flag air carrier was not available or why it was necessary to use a foreign air carrier and shall, in any event, provide a certificate of compliance with the Fly America requirements. The Contractor agrees to include the requirements of this section in all subcontracts that may involve international air transportation.

PP. National Intelligent Transportation Systems Architecture

and Standards

The Contractor agrees to conform, to the extent applicable to the National Intelligent Transportation Systems (ITS) Architecture and Standards as required by section 5206(e) of TEA-21, 23 U.S.C. § 502 note, and comply with FTA Notice, "FTA National ITS Architecture Policy on Transit Projects" 66 Fed. Reg. 1455 *et seq*., January 8, 2001, and other Federal requirements that may be issued.

QQ. Federal Changes

Contractor shall at all times comply with all applicable FTA regulations, policies, procedures, and directives, including without limitation those listed directly or by reference in the Agreement (Form FTA MA (9) dated October 2002) between Purchaser and FTA , as they may be amended or promulgated from time to time during the term of this contract. Contractor's failure to so comply shall constitute a material breach of this contract.

RR. Incorporation of Federal Transit Administration (FTA) Terms

The preceding provisions include, in part, certain Standard Terms and Conditions required by DOT, whether or not expressly set forth in the preceding contract provisions. All contractual provisions required by DOT, as set forth in FTA Circular 4220.1F, dated November 1, 2008, are hereby incorporated by reference. Anything to the contrary herein notwithstanding, all FTA mandated terms shall be deemed to control in the event of a conflict with other provisions contained in this Agreement. The Contractor shall not perform any act, fail to perform any act, or refuse to comply with any (name of grantee) requests, which would cause (name of grantee) to be in violation of the FTA terms and conditions.

SS. Force Majeure

Neither Party will be liable for any failure or delay in performing an obligation under this Agreement that is due to any of the following causes, to the extent beyond its reasonable control: acts of God, accident, riots, war, terrorist act, government declared states of emergency, epidemic, pandemic, quarantine, civil commotion, breakdown of communication facilities, breakdown of web host, breakdown of internet service provider, natural catastrophes, governmental acts or omissions, changes in laws or regulations, national strikes, fire, explosion, generalized lack of availability of raw materials or energy and other events beyond its reasonable control, the effect of which, by the exercise of reasonable diligence, the non-performing party could not avoid. In the event that such failure or delay occurs, the affected Party shall notify the other Party of the occurrence thereof as soon as possible and the Parties shall discuss the best way to resolve the event of force.

Neither party shall, however, be excused from performance if nonperformance is due to forces which are preventable, removable, or remediable and which the non-performing party could have, with the exercise of reasonable diligence, prevented, removed, or remedied with reasonable dispatch. The non-performing party shall within a reasonable time of being prevented or delayed from performance by an uncontrollable force, give written notice to the other party describing the circumstances and uncontrollable forces preventing continued performance of the obligations of this Agreement. “

TT. Governing Law

The Contract shall be interpreted under, and its performance governed by the laws of the State of Rhode Island."

UU. Indemnification

Proposers shall indemnify and hold harmless, the State of Rhode Island, all departments and division thereof and the Rhode Island Public Transit Authority from all liability and said indemnification shall cover and include any and all aspects of liability arising from any lawsuit pertaining to the execution of this contract.

VV. Policy Concerning Federal and Stated False Claim Laws

As required by 42 U.S.C. §1396a(a)(68), the Rhode Island Public Transit Authority ("RIPTA") publishes the following information to all employees, contractors, and agents about federal and state False Claims laws and RIPTA's policies to detect and prevent fraud, waste, and abuse.

1. Prohibitions against False Claims

Federal False Claims Act

The federal False Claims Act, among other things, applies to the submission of claims for payment by Medicare, Medicaid, and other federal and state programs. The False Claims Act is the federal government's primary civil remedy for improper or fraudulent claims. It applies to all federal programs, including welfare and health care benefits.

2. Prohibitions of the Federal False Claims Act

The False Claims Act prohibits, among other things:

a knowingly presenting or causing to be presented to the federal government a false or fraudulent claim for payment or approval.

b knowingly making or using, or causing to be made or used, a false record or statement in order to have a false or fraudulent claim paid or approved by the government.

c conspiring to defraud the government by getting a false or fraudulent claim allowed or paid; and

d knowingly making or using, or causing to be made or used, a false record or statement to conceal, avoid, or decrease an obligation to pay or transmit money or property to the government.

"Knowingly" means that a person, with respect to information: (1) has actual knowledge of the information; (2) acts in deliberate ignorance of the truth or falsity of the information; or (3) acts in reckless disregard of the truth or falsity of the information and no proof of specific intent to defraud is required.

3. Enforcement

The United States Attorney General may bring civil actions for violations of the False Claims Act. As with most other civil actions, the government must establish its case by presenting only a preponderance of the evidence rather than by meeting the higher burden of proof that applies in criminal cases. The False Claims Act allows private individuals to bring "qui tam" actions for violations of the Act.

WW. American with Disabilities Act

All products, equipment or construction provided in accordance with this contract shall comply with the current version of the Americans with Disabilities Act of 1990 - 42 U.S.C. 12101, et seq. at the time of the solicitation.

XX. Expense Reimbursement Professional Services Contracts

The following methods of Reimbursement of Expenses directly related to the performance of this contract shall be utilized. Any expenses incurred must be approved in writing by the RIPTA Project Manager before they occur. The vendor is responsible to submit sufficient documentation to allow the Authority to verify the expenses.

1. Automobile mileage

Travel mileage will be reimbursed at the rate approved by the Internal Revenue Service at the time the travel is. incurred.

2. Per Diem Expenses

Meals will be reimbursed at the rates established by the General Services administration for the City of Providence or Newport, which is applicable to the RIPTA Project. The applicable Per Diem rates can be found at the following website: **www.gsa.gov**

A copy of the printout of the GSA website documenting the applicable per diem rate must be attached to the invoice.

3. Lodging

Lodging will be reimbursed at the rates established by the General Services administration for the City of Providence or Newport, which is applicable to the RIPTA Project. The applicable Per Diem rates can be found at the following website: **www.gsa.gov** .

A copy of the printout of the GSA website documenting the applicable per diem rate must be attached to the invoice

4. Miscellaneous Expenses

Materials used in conjunctions with this contract shall be provided at cost plus the following (applicable) fee for Overhead, Pickup, and Delivery. No additional charges will be acceptable.

Material Cost	Overhead Fee
$0-500	No Fee
$501-750	$75.00
$751-1000	$100.00
$1001-1500	$125.00
$1501-$2500	$180.00
$2501-5000	$300.00
$5001-7500	$450.00
Over 7501.	$525.00

Copies of Receipts must be submitted to verify Miscellaneous Expenses

5. Estimated Expenses

Proposers are required to submit an accurate list of projected expenses that may be necessary to properly execute the Scope of Services of this Contract. This must be submitted with the Proposal submittal.

YY. Background Check

Employees of the Successful Vendor that in the course of performance of this contract will be on any of RIPTA's Properties may be subject to a Criminal Background Check.

ZZ. Security Requirements for Work on RIPTA Property

1. Upon arrive at the RIPTA work location they are to sign in with the Mechanical Foreman (or designated person) on duty
2. Wear all the proper safety equipment as required.

3. Display RIPTA issued vendor badge so it can be observed on their person.
4. Access only areas where permission has been granted.
5. Sign out with the same Foreman they signed in with.
6. Secure the facility prior to the facility being locked up.
7. Any issued or non-compliance with these rules could result in their access to the property being denied.

AAA. Records Retention

All required records for this contract will be retained for a minimum of three years after grantees or sub grantees make final payments and all other pending matters are closed.

BBB. Litigation

In the last ten (10) years, has any customer to which you provide the same or similar services that are the subject of this procurement initiated a lawsuit or arbitration against you relating to your provision of the services?
If so, provide a copy of the complaint against you and advise as to the status of the proceeding. If the case has been resolved, please describe the resolution of the case.

CCC. Public Records/Confidentiality

The Proposals received become the exclusive property of RIPTA. When a contract award is approved by RIPTA, all Proposals submitted in response to this Request for Proposals shall become a matter of public record and shall be regarded as public records, with the exception of those elements of each Proposal that are marked as "CONFIDENTIAL" or PROPRIETARY". If required by law or by an order of a court, RIPTA may be required to disclose such records or portions thereof, including without limitation those so marked

DDD. Utilization of Small Business Sub-Contractors

It is suggested that Prime Contractors provide subcontracting opportunities that small business, including DBE's can reasonably perform rather than self-performing all of the work in the contract.

EEE. Federal, State and Local Safety, Health and Environmental Regulations.

It shall be the responsibility of the Contractor to follow all relevant Safety and Health Regulations. The Contractor shall be responsible to determine which regulations apply and they shall follow them. The Authority may include specific RIPTA policies, in the Scope of Work, which must be followed.

FFF. Licenses and Certifications

The Contractor shall be responsible to ensure their company and any and all Subcontractors possible the necessary licenses and certifications to perform the work as required by the State of Rhode Island and the Authorities having Jurisdiction.

GGG. Covid 19 Safety Procedures

The Contractor and all Subcontractors working on site for this project must adhere to the Center for Disease Control and Rhode Island Department of Health Safety Guidelines in effect at the time the work is being performed. The Guidelines include, but are not limited to the following:

1. Prior to anyone being allowed on the campus the following screening questions should be asked:
1. Have you or any family members tested positive for COVID-19?
2. Have you felt ill recently?

3. If the answer to any of these two questions is YES, then the person should be advised that they cannot come onto the job site.
4. All workers shall wear face coverings while on the property.
5. All workers shall check in with the job supervisor.
6. The General Contractor shall be responsible to keep a log with the following information on all the workers.
   a. name,
   b. date, time,
   c. location visited.
   d, this log shall be made available to RIPTA whenever requested.
7. Maintains proper hygiene while working on site.
8. Wipe down and sanitize any work areas with high volume touch points when completing their work.
9. Does not congregate-keep proper spacing (6 feet) distance when possible.

HHH. Retainage for Construction and Design Build Contracts

The Authority will reserve retainage in the amount of ten (10) percent of the contract value until Substantial Completion is complete at which point it will be reduced to five (5) percent until the project is complete. The balance of the retainage will be paid when the project reaches final completion.

III. Substantial completion

Substantial completion is defined as the stage in the progress of the work as determined and certified by the Authority in writing to the Contractor, on which the work is sufficiently complete and satisfactory. Substantial completion means that the property may be occupied or used for the purpose for which it is intended, and only minor items such as touch-up, adjustments, and minor replacements or installations remain to be completed or corrected ,

JJJ. Mobilization/Demobilization

Mobilization and Demobilization are not allowable expenses under Federal Transit Administration Rules. Therefore, vendors are advised that the costs associated with these items must be allocated to other areas of the Contract.

VIII. REQUEST FOR APPROVED EQUAL FORM

This form must be submitted electronically IN MICROSOFT WORD FORMAT TO RIPTA CONTRACTS MANAGER

REQUEST FOR APPROVAL EQUAL QUALIFICATION OR CLARIFICATION

Page:_____ **Ref: RFP NO. 23-34**
Project No._____

To: **Rhode Island Public Transit Authority**

From: _____

Page & Reference:_____

_____

Request Description

Use Additional Sheet If More Space Is Required

Accepted:_____ **Rejected:**_____ **See Addendum #**_____

Explanation:_____

_____
_____
_____
_____
_____
_____
_____

IX. REQUIRED PROPOSAL SUBMISSIONS

The following items marked with an "X" must be submitted with Response.
Failure to submit forms may result in Proposal being deemed non-responsive.
Please submit them in the correct order by Page Number.

Required Company Information Form (found third page of pkg)	X
Must be completed by Prime and All Subcontractors	
Solicitation	X
Offer	X
Statement of Eligibility	X
Affidavit of Non-Collusion	X
Certification of Restrictions on Lobbying	X
Buy America Certificate **FORM MUST BE SUBMITTED WITH PROPOSAL, IF CHECKED, OR PROPOSAL WILL BE CONSIDERED NON-RESPONSIVE**	X
Disadvantaged Business Enterprise	X
***This paperwork must be completed regardless of a DBE Goal; DBE Participation is strongly encouraged. All Subcontractors must be listed regardless of DBE Status**	
General Contract Compliance Certificate	X
Agreement (EEO)	
Certification of Primary Participant Debarment	X
Certification of a Subcontractor (Debarment)	X
Each Subcontractor and potential subcontractor must fill in and sign.	
Non-Resident Contractor (if applicable)	X
Davis Bacon Act Compliance Apprenticeship Certification	X
Applicable Type: (X**) Building** ( ) Highway	
Wage Determination Number https://sam.gov/content/wage-determinations	
Drug & Alcohol Testing	
Proposal Guarantee (Surety)	X
Trafficking in Persons	X
Federal Tax Liability & Felony Conviction	X
Telecommunications Clause	X

The following items marked with an "X" must be submitted AFTER AWARD of the Contract

Designation of an Independent Contractor Form	
After award of Contract for Sole Proprietors	X
IRS W-9 Form	X
Performance and Payment Bonds	X
Certificate of Insurance- (As required in Section XXII and the Technical Specifications)	X

NOTE:

ITEMS WITHOUT AN "X" AND THEIR RESPECTIVE TERMS AND CONDITIONS ARE NOT REQUIRED IN THIS PROPOSAL

X. SOLICITATION FORM

COMPANY NAME _____

PROPOSAL NO. OR PROJECT NO. **23-34**

DESCRIPTION **Providence Bus Tunnel Drainage and Interior Rehabilitation**

A. PROPOSAL REQUIREMENTS

Sealed Proposals in original and 3 copy (ies) will be received at the offices of the Rhode Island Public Transit Authority, 705 Elmwood Avenue Providence, Rhode Island 02907, at the Proposal date and hour set forth on the Request for Proposals or any time prior to the date and hour. Late Proposals will not be accepted.

B. CONTRACT DOCUMENTS

By executing the offer form enclosed herewith, the Proposers agrees to provide all services set forth on the specifications attached hereto upon the terms and conditions set forth in paragraphs A, B, C and D.

C. PAYMENT SCHEDULE

Payment will not be made until receipt and installation of merchandise is accepted by the Transit Authority.

D. COST FOR SERVICE

Please complete necessary cost information as outlined in the Proposal Technical Specifications.

XI. OFFER FORM

Proposers understands that any condition other than stated in the specifications, clarification made to the above, or information submitted on or with this form, other than that requested, may render the Proposal non-responsive.

By execution below, Proposers hereby offers to furnish services in accordance with the contract documents that are a part of the specifications and agrees to fully comply with the contract documents.

PROPOSAL NO 23-34

PROPOSERS _____

EMPLOYER IDENTIFICATION NO.: **to be provided by Vendor at time of Contract Award**

_____

NAME_____

ADDRESS_____

CITY/STATE/ZIP_____

TYPE OF BUSINESS ENTITY: (Please check one)

Sole Proprietor _____
Partnership _____
Corporation _____

PROPOSERS'S CONTRACTING OFFICER

_____
Name *(Please Print)*

_____
Authorized Signature

_____
Title

XII. STATEMENT OF ELIGIBILITY FORM

The _____hereby certifies that he/she
(Name of Proposers)
is/is not (underscore one) included on the Comptroller General's Lists of Persons or Firms Currently Barred for Violations of Various Public Contracts Incorporating Labor Standards Provisions.

_____
Name of Firm

_____
Address

_____
City, State, Zip

_____
Signature of Authorized Person

_____
Date Authorized

XIII. AFFIDAVIT OF NON-COLLUSION FORM

I hereby swear (or affirm) under penalty for perjury:

1. that I am the Proposers (if the Proposers is an individual), a partner of the Proposers (if the Proposers is partnership), or an officer or employee of the proposing corporation having authority to sign on its behalf (if the Proposers is a corporation).

2. that the attached Proposal has been arrived at by the Proposers independently, and has been submitted without collusion with, and without agreement, understanding, or planned common course of action with, any other vendor of materials, supplies, equipment, services described in Request for Proposals, designed to limit independent Proposals or competition.

3. that the contents of the Proposal have not been communicated by the Proposers or its employees or agents, to any person not an employee or agent of the Proposers or its surety on any bond furnished with the Proposal, and will not be communicated to any such person prior to the official opening of the Proposal; and

4. that I have fully informed myself regarding the accuracy of the statement made on this affidavit.

_____

Name

_____

Address

_____

City, State, Zip

_____

Signature of Authorized Official

_____

Date Authorized

Subscribed and sworn before me this _____ day of _____, 20____

Notary Public

My commission expires. _____

XIV. CERTIFICATION OF RESTRICTIONS ON LOBBYING FORM

I, _____, hereby certify on
(Name/title of Proposers Authorized Official)

behalf of: _____that:
(Name of Proposers)

1) No Federal appropriated funds have been paid or will be paid, by or on behalf of the undersigned, to any person for influencing or attempting to influence an officer or employee of any agency, a Member of Congress, an officer or employee of Congress, or an employee of a member of Congress in connection with the awarding of any Federal contract, the making of any Federal grant, the making of any Federal loan, the entering into of any cooperative agreement, and the extension, continuation, grant, loan, or cooperative agreement.

2) If any funds other than Federal appropriated funds have been paid to any person for influencing or attempting to influence an officer or employee of any agency, a Member of Congress, or an employee of a member of Congress in connection with this Federal contract, loan, or cooperative agreement, the undersigned shall complete and submit Standard Form-LLL, "Disclosure Form to Report Lobbying", in accordance with its instructions.

3) The undersigned shall require that the language of this certification be included in the award documents for all sub-awards at all tiers (including subcontracts, sub-grants, and contracts under grants, loans, and cooperative agreements) and that all sub-recipients shall certify and disclosure accordingly.

This certification is a material representation of fact upon which reliance is placed when this transaction was made or entered into. Submission of the certification is a prerequisite for making or entering into this transaction imposed by Section 1352, Title 31, U.S. Code. Any person who fails to file the required certification shall be subject to a civil penalty of not less than $10,000 and not more than $100,000 for each such failure.

Executed this _____ day of _____, 20_____.

By _____
(Signature of Authorized Official)

XV. BUY AMERICA CERTIFICATION REQUIREMENTS I FOR PROCUREMENT OF STEEL OR MANUFACTURED PRODUCTS

49 U.S.C. 5323(j) and 49 CFR 661.6 provide that no Federal funds may not be obligated for mass transportation projects unless steel and manufactured products used in these projects are produced in the United States.

If steel or manufactured products are being procured, the appropriate certificate as set forth below shall be completed and submitted by each Proposers.

"Construction materials used in projects are subject to the domestic preference requirement of the Build America, Buy America Act, Pub. L. 117-58, div. G, tit. IX, 70911 70927 (2021), as implemented by the U.S. Office of Management and Budget, the U.S. Department of Transportation, and FTA. The Recipient acknowledges that this agreement is neither a waiver of 70914(a) nor a finding under 70914(b)."

Certificate of Compliance-The Proposers hereby certifies that it will comply with the requirements of 49 U.S.C. 5323 (j) (1) and the Applicable regulations on 49 CFR Part 661.12

COMPANY NAME _____

SIGNATURE _____

TITLE _____

DATE _____

Certification of Non-Compliance-The Proposers hereby certifies that it cannot comply with the requirements of 49 U.S.C. 5323 (j) (1).

COMPANY NAME _____

SIGNATURE _____

TITLE _____

DATE _____

FORM MUST BE SIGNED AND SUBMITTED WITH PROPOSAL OR PROPOSAL WILL BE CONSIDERED NON-RESPONSIVE.

XVI. BUY AMERICA CERTIFICATION REQUIREMENTS II OF PROCUREMENT OF BUSES, OTHER ROLLING STOCK AND ASSOCIATED EQUIPMENT

49 U.S.C. 5323 (j) and 49 CFR 661.11 and 12 provide that no Federal funds be obligated for procurement of buses, other rolling stock, and associated equipment unless the following conditions are met:

1. The cost of components which are produced in the United States is more than 70 per centum (70%) of the cost of all components of the vehicle or equipment described in this paragraph; and
2. Final assembly of the vehicle or equipment described in this paragraph has taken place in the United States.

   If buses or other rolling stock (including train control, communication, and traction power equipment) are being procured, the appropriate certificate as set forth below shall be completed and submitted by each Proposers in accordance with the requirements.

Certificate of Compliance-The Proposers hereby certifies that it **will comply** with the requirements of the 49 U.S.C. 5323 (j) (2) (c) and CFR Part 661.

COMPANY NAME _____

SIGNATURE _____

TITLE _____

DATE _____

Certificate of non-Compliance-The Proposers hereby certifies that it **cannot comply** with the requirements of the Surface Transportation Assistance Act of 1982, as amended, but may qualify for an exception to the requirements.

COMPANY NAME _____

SIGNATURE _____

TITLE _____

DATE _____

FORM MUST BE SIGNED AND SUBMITTED WITH PROPOSAL OR PROPOSAL WILL BE CONSIDERED NON-RESPONSIVE.

XVII. BUY AMERICA PRE-AWARD AND POST-DELIVERY AUDITS:

A. Prior to Contract award,

The apparent successful offeror shall provide to the Authority's auditors the cost of the components and subcomponents to be used in the manufacturing of the rolling stock, their country of origin, the location of final assembly, the activities that will take place at the location and pertinent supporting documentation for the purpose of RIPTA performing the cited Pre-Award Audit of Buy-America requirements.

B. After delivery and acceptance of the vehicles,

The Contractor shall provide to the Authority's auditors the cost of the components and subcomponents used in the manufacture of the rolling stock, their country of origin, the location of final assembly, the activities that took place at the location and pertinent supporting documentation to enable RIPTA to perform the cited Post-Delivery Audit of Buy America Requirements.

C. Authority Review

The contractor shall facilitate the reviews by the Authority's auditors by providing the supporting documentation for the above information in a timely fashion.

XVIII. DISADVANTAGED BUSINESS ENTERPRISES PROGRAM

For the purpose of this Contract, the goal for utilization of DBEs shall be the following percent of the Contract Dollar Amount:

DBE GOAL FOR THIS CONTRACT: Five Percent

A. Policy

1. It is the policy of the DOT that Disadvantaged Business Entities are given the maximum opportunity to participate in the performance of contracts financed in whole or in part with Federal funds, pursuant to 49 CFR Part 26. . Consequently, the DBE requirements of 49 CFR Part 26, as amended, apply to this Contract and RIPTA and its Contractors shall take all necessary and reasonable steps to ensure that DBE's have the maximum opportunity to compete for such contracts. RIPTA and its Contractors shall not discriminate on the basis of race, color, religion, national origin, age sexual orientation, disability, gender identity, expression, or veteran status, in the award and performance of DOT-assisted contracts.
2. Contractor Obligation –
   a. In the event that a DBE Utilization Goal is set on this Contract, Contractors and subcontractors failing to carry out applicable requirements of 49 CFR Part 26 and/or uses or attempts to use false, fraudulent, or deceitful statements/representations or otherwise exhibits a serious lack of business integrity or honesty to meet such DBE Utilization Goal, shall be in breach of contract. After notification to the DOT, RIPTA may terminate the Contract or take any other action it deems appropriate. The DOT may take joint or separate action, as it deems appropriate and necessary.
   b. The Contractor shall provide the following assurance and ensure that each subcontract that it enters with a subcontractor contains the same assurance:

      The Contractor, sub recipient or subcontractor shall not discriminate on the basis of race, color, religion, age, national origin, sexual orientation, disability, gender identity, expression, or veteran status in the performance of this contract. The Contractor shall carry out applicable requirements of 49 CFR part 26 in the award and administration of DOT-assisted contracts. Failure by the Contractor to carry out these requirements is a material breach of this contract, which may result in the termination of this contract or such other remedy as the recipient, deems appropriate, which may include, but is not limited to:
      (1). Withholding monthly progress payments.
      (2). Assessing sanctions.
      (3). Liquidated damages; and/or
      (4) Disqualifying the Contractor from future proposals as non-responsible
2. Contractor Obligation – In the event that a DBE Utilization Goal is set on this Contract, Contractors and subcontractors failing to carry out applicable

requirements of 49 CFR Part 26 and/or uses or attempts to use false, fraudulent, or deceitful statements/representations or otherwise exhibits a serious lack of business integrity or honesty to meet such DBE Utilization Goal, shall be in breach of contract. After notification to the DOT, RIPTA may terminate the Contract or take any other action it deems appropriate. The DOT may take joint or separate action, as it deems appropriate and necessary.

3. DBE Utilization - The Contractor shall provide for full and fair utilization of DBEs by complying with the requirements of this Section. Such requirements include the achievement of the stated DBE Utilization Goal in the performance and completion of the work under the Contract. Nothing in this Section shall be construed to require the utilization of any DBEs, which is either not qualified or unavailable.

   a. ***All DBEs submitted must be certified by the State of Rhode Island at the time of Proposal submittal. A copy of the DBE Certification Letter from the State of Rhode Island Office of Civil Rights must accompany the Proposal submittal.***

   b. **If a DBE Utilization Goal is set for this Contract, a Contractor's DBE utilization and/or "Good Faith Effort" to obtain DBE participation shall be considered when reviewing proposal submittals for responsiveness.**

   C. **If NO DBE Utilization Goal is set for this Contract, Contractors are, nonetheless, encouraged to have DBE/Small Business participation in their proposal and to include the associated DBE forms in its proposal submittal.**

B. Definitions.

The terms used in these special provisions shall be defined as follows:

1. Joint Venture

An association of two or more persons to carry out a single business enterprise for profit, for which purpose they combine their property, money, efforts, skills, and knowledge.

2. Disadvantaged Business

means a small business concern in which is, at least, 51 percent owned by one or more socially and economically disadvantaged individuals, or, in the case of any publicly owned business, at least 51 percent of the stock of which is owned by one or more socially and economically, disadvantaged individuals who own it.

3. Small Business Concern

A small business as defined pursuant to Section 3 of the Small Business Act and relevant regulations promulgated pursuant thereto.

4. Socially and Economically Disadvantaged Individuals

means those individuals who are citizens of the United Stated (or lawfully admitted permanent residents) and who are women, Black Americans, Hispanic Americans, Native Americans, Asian-Pacific Americans, or Asian-Indian Americans and any other minorities of individuals found to be disadvantaged by the Small Business Administration pursuant to Section 8 (a) of the Small Business Act, RIPTA shall make a rebuttal presumption the individuals in the following groups are socially and economically

disadvantaged. RIPTA may also determine, on a case-by-case basis, that individuals who are not a member of one of the following groups are socially and economically disadvantaged:

a. **Black or African Americans**, which includes persons having origins in any of the Black racial groups of Africa.
b. **Hispanic or Latino Americans**, which includes persons of Mexican, Puerto Rican, Cuban, Central or South America, or other Spanish culture or Portuguese culture, regardless of race.
c. **American Indian or Alaska Native**, which includes persons who are American Indian, Eskimo or Aleuts.
d. **Asian-Pacific Americans or Native Hawaiian**, which includes persons whose origins are Hawaii, Japan, China, Taiwan, Korea, Vietnam, Laos, Cambodia, the Philippines, Samoa, Guam, the U.S. Trust Territories of the Pacific, and the Northern Marianas; and
e. **Asian-Indian Americ**ans, which includes persons whose origins, are from India, Pakistan, and Bangladesh.
f. **Disadvantaged Business Enterprise (DBE) Liaison Officer** – the individual designated by the Authority to monitor compliance with these Special Provisions and to assist in their implementation.
g. **Proposers** – any individual, partnership, joint venture, corporation, or firm submitting a Proposal for the contract.

C. Recognition of DBE Commitment

Each Contractor shall recognize RIPTA's commitment to ensure that DBEs be afforded full opportunity to participate in contracts awarded by RIPTA and will not be discriminated against on the grounds of race, color, religion, age, national origin, sexual orientation, disability, gender identity or expression or veteran status.

D. Proposal Submissions for Contracts with DBE Utilization Goals and/or DBE Participation

The Schedule of DBE Participation (Attachment A) shall have the following information.

1. The name and address of each DBE firm that will participate in the Contract.
2. A description of the work each named DBE firm will perform; and
3. The dollar amount and percentage of the DBE Utilization Goal, if applicable, of participation by each named DBE firm.
4. RIPTA encourages all firms located in the United States that are currently certified as DBEs and SBAs by Federal, State and Local agencies to apply for certification in the State of Rhode Island. ***Only DBEs certified by the State of Rhode Island at the time of Proposal submittal shall be counted towards any DBE Utilization Goal requirement.***

If a minority business would like to be certified by the State of Rhode Island, contact the Minority Business Enterprise Compliance Program:

Ms. Dorinda Keene, Assistant Administrator – MBE Compliance
RI Department of Administration
Office of Diversity, Equity and Opportunity

Minority Business Enterprise Compliance Program
One Capitol Hill, 3rd Floor.
Providence, RI 02908
401.574.8670

E. Good Faith Efforts for DBE Participation:

If the apparent successful Contractors' submissions do not satisfy the goal, RIPTA shall determine whether the apparent successful competitor has made good faith efforts to obtain DBE participation in accordance with the guidelines stated in Paragraph F, Sub-paragraph 1, below.

Unsuccessful efforts in gaining DBE participation must be documented on the "DBE Unavailability Certification" attached hereto as Attachment D. Meeting the DBE contract goals or making good faith efforts to meet the goals is a condition of receiving a Federal Transit Administration assisted contract for which contract goals have been established by RIPTA.

The legitimacy of each DBE or disadvantaged-majority joint venture shall be determined by RIPTA, based on the information submitted in the affidavits attached hereto as Attachments C and D. RIPTA will require all prime contractors to make good faith efforts to replace a DBE subcontractor that is unable to perform successfully with another DBE. RIPTA shall approve all substitutions of subcontractors **before** award of contract and **during** contract performance, in order that substitute firms are eligible DBE's.

F. Procedure Prior to Contact Award

1. Guidance Concerning Good Faith Efforts to Meet DBE Contract Goals.

RIPTA may decide that a Contractor that has failed to meet DBE contract goals may receive the Contract upon determining that the efforts the Contractor made to obtain DBE participation were "good faith efforts" to meet the goal. RIPTA shall not consider efforts that are merely pro forma to be good faith efforts to meet the goals, even if they are sincerely motivated, if, given all relevant circumstances, they could not reasonably be expected to produce a level of DBE participation sufficient to meet the goals. In order to award a contract to a Contractor that has failed to meet DBE contract goals, RIPTA must determine that the competitor's efforts were those that, given all relevant circumstances, a competitor, actively and aggressively seeking to meet the goals would make.

Following is a list of the kinds of efforts RIPTA may consider. The list is not exclusive or exhaustive and in appropriate cases, RIPTA shall consider other relevant factors or types of efforts. RIPTA shall consider not only the different kinds of efforts the contractor has made, but also the quantity and intensity of those efforts. All information must be in writing and copies of all ads, written notices, follow-up letters and/or all other correspondence must be presented whenever a waiver is asked for.

RIPTA will consider the following efforts:

i. whether the contractor attended any pre-solicitation or pre-Proposal meetings that were scheduled by RIPTA to inform DBEs of contracting opportunities.
ii. whether the contractor advertised in general circulation, trade association, and disadvantaged focus media concerning the sub-contracting opportunities.
iii. whether the contractor provided written notice to a reasonable number of specific DBEs that their interest in the contract was being solicited in sufficient time to allow the DBEs to participate effectively.
iv. whether the contractor followed up initial solicitation of interest by contracting DBEs to determine with certainty whether the DBEs were interested.
v. whether the contractor selected portions of the work to be performed by DBEs in order to increase the likelihood of meeting the DBE goals including, where appropriate, breaking down contracts into economically feasible units to facilitate DBE participation.
vi. whether the contractor provided interested DBEs with adequate information about the plans, specifications, and requirements of the contract.
vii. whether the contractor negotiated in good faith with interested DBEs, not rejecting DBEs as unqualified without sound reasons based on a thorough investigation of their capabilities.
viii. whether the contractor made efforts to assist interested DBEs in obtaining bonding lines of credit, or insurance required by RIPTA or contractor; and
ix. Whether the contractor effectively used the services of available disadvantaged community organizations, disadvantaged contractor's groups, Local, State and Federal disadvantaged business assistance offices, and other organizations that provide assistance in the recruitment and place of DBEs.

G. Termination of DBE Subcontractors

In any case when a prime contractor wishes to either: A: decrease the price to be paid to the DBE and the disadvantaged non-disadvantaged joint venture or to B: terminate a DBE firm, the prime contractor must first provide the DBE with five days' notice of the prime contractor's intent and reason to terminate the contract between them, and must also advise the DBE firm that it has the right to contact RIPTA to object to the termination. In addition, after the five-day written notice to the DBE has expired, the prime contractor must provide RIPTA with a written request to approve termination. The request must state the business reason why the prime contractor wishes to terminate the contract and must include all documentation in support of that business reason. A prime contractor may only reduce the scope or terminate a DBE firm for cause. It may not terminate a DBE contract for convenience. A DBE firm may not be terminated until written approval has been provided by RIPTA. If RIPTA approves a request to terminate, the prime contractor must make a good faith effort to substitute another DBE firm to replace the firm that has been terminated. This good faith effort shall be documented and subject to review by RIPTA. Failure to make a good faith effort may be deemed a breach of the prime contractor's contract with RIPTA and may result in the prime contractor being barred

from submitting proposals on future RIPTA projects or subject to any other remedy RIPTA deems appropriate.

H. Substitution of Subcontractors

RIPTA shall review for its approval all substitutions of subcontractors in order to determine if the percentage goal will be decreased by substitution of a disadvantaged contract/supplier with a non-disadvantaged contractor/supplier. Where RIPTA has approved termination of a sub-contract held by an DBE or disadvantaged non-disadvantaged joint venture, the successful Proposers shall make every reasonable effort to propose and enter into an alternative sub-contract or subcontracts for the same work to be performed by another qualified DBE for a contract price or prices totaling not less than the contract price of the terminated sub-contract. Satisfactory evidence of reasonable efforts shall be timely furnished by RIPTA.

I. Program Compliance

Discrimination on the basis of race, color, religion, age, national origin, sexual orientation, disability, gender identity or expression or veteran status shall not be tolerated under any circumstance. RIPTA shall monitor the schedule for DBE participation in an effort to isolate those prime contractors who do not adhere to the non-discriminatory policies of RIPTA. If such contractor fails to respond to counseling with respect to the disposition of subcontracts pertaining to RIPTA funds, RIPTA reserves the right to terminate the contract and to consider future Proposals of such contractor to be non-responsive in the absence of written assurance from it of the full opportunity for DBEs to participate in its awards of subcontracts, together with the follow-up to verify such participation.

J. Maintenance of Records

All records relating to the contract shall be maintained by the contractor for a period of three (3) years after project completion.

K. Prompt Payment

The prime contractor agrees to pay each subcontractor under this prime contract for satisfactory performance of its contract no later than 30 days from the receipt of each payment the prime contractor receives from RIPTA. The prime contractor agrees further to return retainage payments to each subcontractor within 30 days after the subcontractor's work is satisfactorily completed. Any delay or postponement of payment from the above reference period may occur only for good cause following written approval of RIPTA. This clause applies to both DBE and non-DBE subcontractors. RIPTA reserves the right to hold payments to the Contractor if payments verification logs are not submitted within 30 days of payments. Failure to submit payments to DBE subcontractors within 30 days will result in action by RIPTA up to and including disqualification from any future RIPTA Procurements.

L. Monitoring Payments to DBEs

RIPTA requires that prime contractors to maintain records and documents of payments to DBEs following the completion of the contract. These records will be made available for inspection upon request by any authorized representative of RIPTA or United States Department of Transportation. This requirement also extends to any DBE Subcontractor. Reports of payments to DBE Subcontractors shall be provided to the RIPTA DBE Liaison Officer on a monthly basis. Failure to submit these reports on a timely basis may result in delay of payments.

XIX. DISADVANTAGED BUSINESS ENTERPRISE REQUIRED FORMS

Attachment A: Schedule of DBE Participation
Submitted if DBE firm or firms will be participating in the Proposal.

Attachment B: DBE Application Agreement
Submitted if DBE firm or firms will be participating in the Proposal.

Attachment C: Letter of Intent to Perform as a Subcontractor
Submitted if DBE firm or firms will be participating in the Proposal.

Attachment D: DBE Unavailability Summary Sheet
Submitted if DBE firm or firms you have contacted cannot participate. This form is used to document good faith effort. This form only needs to be completed when there is a DBE Participation Goal.

Attachment E: Narrative Explanation for Lack of DBE Participation
Submitted by the Prime Contractor to explain lack of DBE/SBA participation.

Attachment F: Documentation of DBE Utilization
To be filled in by the DBE firm and the prime contractor once the DBE Subcontractor has been paid.
Please Note: Final payment to the Prime Contractor will be held until this form or forms are received for each DBE Subcontractor.

DBE FIRMS PROPOSING AS A PRIME CONTRACTOR: the following forms must be filled in, signed, and submitted with the Proposal.

Attachment A, Attachment B
Please state, on these forms, that you are proposing as a prime contractor.

CERTIFICATION LETTER OR NOTIFICATION MUST BE INCLUDED FOR EACH DBE FROM THE STATE OF RHODE ISLAND.

Please record by letter (using the list below) under the DBE Category Column found on Attachment A: Schedule of DBE Participation Form on the following page

a. "Black Americans", which includes persons having origins in any of the Black racial groups of Africa.
b. "Hispanic Americans", which includes persons of Mexicans, Puerto Rican, Cuban, Central or South America, or other Spanish culture or Portuguese or origin, regardless of race.
c. "Native Americans", which include persons who are American Indian, Eskimos, Aleuts, or Native Hawaiians:
d. "Asia-Pacific Americans", which includes persons whose origins are from Japan, China, Taiwan, Korea, Vietnam, Laos, Cambodia, the Philippines, Samoa, Guam, the U.S. Trust Territories of the Pacific, and the Northern Marianas.
e. "Asian-Indian Americans", which includes persons whose origins are from India, Pakistan, and Bangladesh; and
f. Any other minorities or individuals found to be disadvantaged by the Small Business Administration pursuant to Section 8 (a) of the Small Business Act.

SCHEDULE OF SUBCONTRACTOR PARTICIPATION

All Subcontractors must be listed regardless of DBE Status

A. **Attachment A**

Company Name: _____

Project Number: **23-34** **Project:** **Providence Bus Tunnel Drainage and Interior Rehabilitation**

*Please provide copy of DBE Certification Letter for each DBE firm listed from the Rhode Island Office of Civil Rights. **DBE Vendors must be certified in the State of Rhode Island at the time of Proposal Submittal to be considered. A full, up to date list of Rhode Island DBEs can be obtained at the following website:** https://dedi.ri.gov/divisions-units/minority-business-enterprise-compliance-office/us-dot-disadvantaged-business

Firm Name	Firm Address	DBE Category (if applicable)	Phone Number	Contact Name	Work to be Performed	Estimated Value Dollars	Estimated Value Percent of Proposal

The undersigned will enter into a formal agreement with Disadvantaged Business Enterprise firms for work listed in this schedule conditioned upon execution of a contract with the Rhode Island Public Transit Authority.

Authorized Signature of Proposers Official_____

Each DBE Firm listed in the Section must also complete the Required Company Information Form and the Certification of Subcontractor Form *Use additional forms as needed.

DBE APPLICATION AGREEMENT

B. **Attachment B**

Project Number: **23-34**

Project Name: **Providence Bus Tunnel Drainage and Interior Rehabilitation**

With respect to the above numbered project, I hereby certify that I am the
_____ and duly authorized representative of _____
(Title) (Firm)
Address is _____, _____, _____
(Street) (State) (Zip Code)

I do hereby certify that it is the intention of the above organization to affirmatively seek out and consider Disadvantaged Business Enterprises to participate in this contract as contractors, Subcontractors and/or suppliers of requirements of the U.S. Department of Transportation's regulation 49 CFR Part 26.

I understand and agree that any and all contracting in connection with this contract, whether undertaken prior to or subsequently to award of contract, will be in accordance with this provision.

The utilization of Disadvantaged Business Enterprise is in addition to all other equal opportunity requirements of this contract.

_____
Authorized Signature

_____
Title

LETTER OF INTENT TO PERFORM AS A SUBCONTRACTOR

C. Attachment C.

RIPTA requires a listing of DBE firms contacted; but not able to perform work. Use additional pages as needed. The DBE Goal for this project is Five percent. **. A full, up to date list of Rhode Island DBEs can be obtained at the following website: www.mbe.ri.gov/.**

Project Name: Providence Bus Tunnel Drainage and Interior Rehabilitation **Project Number: 23-34**

DBE Firm Name	DBE Firm Address	DBE Category	Phone Number Email Address	Contact Name	Reason Unable to Perform Work

Form completed by: _____ Date:_____

NARRATIVE EXPLANATION FOR LACK OF DBE PARTICIPATION

D. Attachment D

To: _____

(Name of Prime or General Proposers)

The undersigned intends to perform work in connection with the above project as (check one):

___ **an** individual ___ **a** corporation

___ **a** partnership ___ **a** joint venture

The undersigned is prepared to perform the following described work in connection with the above project (specify in detail particular work items or parts thereof to be performed).

_____
_____
_____
_____
_____
_____
_____
_____
_____
_____

for the following compensation: _____

_____
(Name of DBE Contractor)

DBE GOOD FAITH EFFORT SUMMARY SHEET

E. **Attachment E**

Company Name: _____

Project Number: **23-34**

Project Name: **Providence Bus Tunnel Drainage and Interior Rehabilitation**

_____
_____
_____
_____
_____
_____
_____
_____
_____
_____
_____
_____
_____
_____
_____
_____
_____
_____
_____
_____
_____
_____

_____
(Authorized Signature of Prime Contractor)

TO BE FILLED IN BY THE PRIME CONTRACTOR TO EXPLAIN LACK OF DBE PARTICIPATION.

DOCUMENTATION OF DBE UTILIZATION

F. **Attachment F**

RIPTA Contract Number: **23-34**

Prime Contractor: _____

DBE Name: _____

Starting Date: _____ **Completion Date:** _____

This is to verify the following:

- I was the approved DBE on the above contract.
- I performed the items of work Subcontracted.
- I actually received $_____ for my work.
- I received payment of retainage on _____
  (Date)

_____ _____
(Signature & Title of DBE) (Date)

_____ _____
(Signature & Title of Prime Contractor) (Date)

This form is to be filled in by the DBE firm and the prime contractor once the DBE Subcontractor has been paid.

Retainage payments will be made to each subcontractor within 30 days after the subcontractor's work is satisfactorily completed

Please Note: Final payment to the Prime Contractor will be held until this form or forms are received for each DBE Subcontractor.

XX. PERFORMANCE AND PAYMENT BOND INFORMATION

The selected Proposers shall furnish, within twenty (20) calendar days (if required) (See Required Proposal Submissions Page) after the date of notice of award of contract by RIPTA, Performance and Payment Bonds in the amount of 100% of the Proposal amount covering the faithful performance of the contract.

The Performance Bond is to be secured through an insurance company or companies which is licensed in the State of Rhode Island, or which is approved by the Authority.

The Bond will remain in effect until the Warranty commences.

XXI. PROPOSAL GUARANTEE (SURETY)

A Proposal Guarantee (if required) shall be submitted with the Proposal response. This guarantee shall be equivalent to five (5) percent of the Proposal price. The "Proposal guaranty shall consist of a firm commitment such a Proposal bond, certified check, or other negotiable instrument accompanying a Proposal as assurance that the Proposers will, upon will, upon acceptance of its Proposers, execute such contractual documents as may be required within twenty (20) calendar days after the date of notice of award of contract by RIPTA.

XXII. REQUIRED INSURANCE

The Proposers will be required to secure and maintain the following insurance coverages:

A. Minimum limits

1. Commercial comprehensive general liability insurance, with limits of $3,000,000.00 per accident and $5,000,000.00 aggregate.
1. Workers' Compensation Coverage in accordance with RI Statutory requirements.
2. The Rhode Island Public Transit Authority shall be named as additional insured under said policies.
3. Automotive Liability Insurance
   - $1,000,000.00 per accident and $3,000,000.00 aggregate: bodily injury.
   - $1,000,000.00 property damage
4. All insurance coverage must provide under an occurrence policy. Claims made policies are not acceptable.

B. Certificate Requirements

1. Each Proposers must provide RIPTA a Certificate of Insurance upon award of the contract. Coverage indicated on certificate must be kept in effect at all times during the contract period.
1. The General Liability Coverage shall include Contractual Liability and Completed Operations Coverages. The General Liability coverage, certificates must name: RIPTA and its respective directors, officers, employees, and affiliates as additional insureds. Reference should be made to project or job number and location.

2. A Waiver of Subrogation in favor of RIPTA must apply to the General Liability, Employers Liability, and Excess Liability / Umbrella policies.
3. Automobile Liability must cover any owed, rented, hired, or borrowed vehicles.
4. The Excess or Umbrella coverage must provide the required Liability limit over the General Liability, Automobile Liability, Employers Liability s, Professional Liability and Environmental Liability policies (if required).
5. If Proposers is to use any subcontractor during the course of the project, the subcontractor must maintain the same limits and terms as the Proposers. Certificates of Insurance for subcontractors must be provided to RIPTA with the Proposer's Submittal after award of the Contract.
6. All certificates of insurance must indicate the carrier policy cancellation terms.
7. All proposers must utilize insurance companies with a "Best" Rating of no less than A-, Size VIII.

C. Special Coverages

1 Contractor must maintain Environmental Pollution coverage with limits no less than $1,000,000 if contractors work includes the transport, delivery, storage, handling or disposal of any pollutants or other hazardous materials. This insurance is also required for all contracts involving any work on RIPTA's storage tanks, and fluid distribution systems

2 Installation Floater Insurance is required for all construction projects equal to the value of the project.

3 Professional Liability/Errors and Omission coverage shall be included in all Professional Services Contracts

RIPTA will entertain requests for a waiver of the requirements with regard to Commercial General Liability limits and Worker's Compensation Insurance on a case-by-case basis. RIPTA reserves the right to approve such requests, and or modify the requirements given a review of the project needs, and applicable federal/state regulations, requirements, and law. This request must be submitted through the Request for Approved Equal Process before award of the Contract.

Proposers shall provide to RIPTA Contracts Manager a Certificate of Insurance upon award of contract. This Certificate shall be kept in effect at all times. Current copies shall be provided to the Contracts Manager

XXIII. GENERAL CONTRACT COMPLIANCE CERTIFICATE AND AGREEMENT

RHODE ISLAND STATE EQUAL OPPORTUNITY OFFICE

The undersigned Contractor agrees and certifies, unless otherwise exempt, that it is in compliance with the applicable requirements of Federal Executive order No. 11246, as amended, Rhode Island General Law 28-5.1-10, and other regulations as issued by the

Rhode Island Public Transit Authority, as set forth below, or will take steps to comply with such requirements prior to acceptance of any order from us. This agreement and certificate shall form a part of, and be deemed incorporated in, each order submitted to you for supplies or services exceeding $10,000. Failure to comply will be considered a substantial breach of the contract.

A. Equal Opportunity Clause

During the performance of this contract, the Contractor agrees as follows:

1. The Contractor will not discriminate against any employee or applicant for employment because of race, color, religion, sex, or natural origin. The Contractor will take affirmative action to ensure that applicants are employed, and that employees are treated during employment, without regard to their race, color, religion, sex, or national origin. Such action shall include, but not be limited to, the following: employment, upgrading, or transfer, recruitment or recruitment advertising, layoff or termination, rates of pay or other forms of compensation, and selection for training, including apprenticeship. The Contractor agrees to post in conspicuous places, available to employees and applicants for employment, notices to be provided by the contracting officer setting forth the provisions of the non-discrimination clause.
2. The Contractor will, in all solicitations or advertisements for placed by or on behalf of the contractor, state that all qualified applicants will receive consideration for employment without regard to race, color, religion, sex, or national origin.
3. The Contractor will send to each labor union or representative of workers with which he/she has collective bargaining agreement or other contract or understanding a notice, advising the labor union or worker's representative of the Contractor's commitments under Section 202 of Federal Executive order No. 11246, as amended, Rhode Island Law 28-5.1-10, and other regulations and relevant orders of the Secretary of Labor.
4. The Contractor will comply with all provisions of Federal Executive Order No. 11246, as amended, Rhode Island General Law 28-5.1-10, and other regulations and relevant orders of the Secretary of Labor.
5. The Contractor will furnish all information and reports required by Executive Order No. 11246, as amended, Rhode Island General Law 28-5.1-10 and other regulations as issued by the State of Rhode Island, and by the rules, regulations, and orders of the Secretary of Labor, or pursuant thereto, and will permit access to his/her books, records and accounts by the State Equal Opportunity Office and the Secretary of Labor for purposes of investigation to ascertain compliance with such rules, regulations and orders.
6. In the event of the Contractor's non-compliance with the non-compliance with the non-discrimination clauses of this contract or with any of such rules, regulations, or orders, this contract may be cancelled, terminated or suspended in whole or part, and the Contractor may be declared ineligible for further State contracts in accordance with procedures authorized in Federal Executive Order No. 11246, as amended, Rhode Island General Law 28-5.1-10 , and other regulations as issued by the State of Rhode Island, and such other sanctions may be

imposed and remedies invoked as provided in Federal Executive Order No. 11246, as amended; Rhode Island Public Transit Authority, or by rule, regulation, or order of the Secretary of Labor, or as otherwise provided by law, or the State of Rhode Island and Providence Plantations.

7. The Contractor will include the provisions of paragraphs (1) through (7) in every sub-contract or purchase order unless exempted by rules, regulations, or orders of the Secretary of Labor issued pursuant to Section 204 of Federal Executive Order No. 11246, as amended, Rhode Island General Law 28-5.1-10, and other regulations as issued by the Rhode Island Public Transit Authority, so that such provisions will be binding upon each subcontractor or vendor. The Contractor will take such action with respect to any sub-contract of purchase order as the contracting agency may direct as a means of enforcing such provisions including sanctions for non-compliance; provided, however, that in the event the Contractor becomes involved in, or is threatened with litigation with a subcontractor or vendor as a result of such direction by the contracting agency, the Contractor may request the United States and the State of Rhode Island to enter into such litigation to protect the interest of the United States and the State of Rhode Island.

B. **Age Discrimination**

Pursuant to Federal Executive Order No. 11246, as amended, the Contractor will not, in connection with the employment, advancement or discharge of employees, or in connection with the terms, conditions, or privileges of their employment, discriminate against persons because of their age except upon the basis of a bona fide occupational qualification, retirement plan or statutory requirement, nor will the Contractor specify, in solicitations or advertisements for employees, a maximum age limit for employment unless the specified maximum age limit is based upon a bona fide occupational qualification, retirement plan or statutory requirement.

C. **Employment of the Handicapped**

1. Contractor will not discriminate against any employee or applicant for employment because of physical or mental handicap in regard to any position for which the employee or applicant for employment is qualified. Contractor agrees to take affirmative action to employ, advance in employment, and otherwise treat qualified handicapped individuals without discrimination based upon their physical or mental handicap in all employment practices such at the following employment, upgrading, demotion or transfer, recruitment, or recruitment advertising; layoff or termination, rates of selection for training, including apprenticeship.
2. Contractor agrees that if a handicapped individual files a complaint with him/her that he/she is not complying with the requirements of the Rehabilitation Act of 1973, he/she will (1) investigate the complaint and take appropriate action consistent with requirements of 41 CFR Part 60-741.29 and (2) maintain on file for three years, the record regarding the complaint and the actions taken.
3. Contractor agrees that if a handicapped individual files a complaint with the Department of Labor that he/she has not complied with the

requirements of the act, (1) he/she will cooperate with the Department in its investigation of the complaint, and (2) he/she will provide all pertinent information regarding his/her employment practices with respect to the handicapped.

4. Contractor agrees to comply with the rules and regulations of Section 503 of the Rehabilitation Act of 1973 as interpreted in 41 CFR Part 60-741.29.
5. In the event of Contractor's noncompliance with the requirements of this clause contract may be terminated or suspended in whole or in part.
6. This clause shall be included in all subcontracts. In the event that this contract exceeds $10,000 but is less than $500,000 and provides for performance in 90 days or more, Contractor further agrees as follows:
7. Contractor agrees (1) to establish an affirmative action program, appropriate procedures consistent with the guidelines and the rules of the Secretary of Labor, will provide the affirmative action regarding employment and advancement of the handicapped required by P.L. 93-516, (2) to publish the program in the employees or personnel handbook or otherwise distribute a copy to all personnel, (3) to review the program each year and to make such changes as may be appropriate, and (4) to designate one of the principal officials to be responsible for the establishment and operation of the program.
8. Contractor agrees to permit the examination by appropriate contracting agency officials or the Assistant Secretary for Employment Standards or the designee, of pertinent books, documents, papers, and records concerning employment and advancement of the handicapped.
9. Contractor agrees to post in conspicuous places, available to employees and applicants for employment, notices in a form to be prescribed by the Assistant Secretary for Employment Standards, provided by the contracting officer, stating Contractor's obligation under the law to take affirmative action to employ and advance in employment qualified handicapped employees and applicants for employment and the rights and remedies available.
10. Contractor will notify each labor union or representative of workers with which he/she has a collective bargaining agreement or other contract understanding, that he/she is bound by the terms of Section 503 of the Rehabilitation Act and is committed to take affirmative action to employ and advance in employment, physically and mentally handicapped individuals.

    In the event this contract exceeds $100,000 and provides for performance in 90 days or more, Contractor further agrees as follows:
11. Contractor agrees to submit a copy of his/her affirmative action program to the State Equal Opportunity Office within 30 days after the award of a contract or sub-contract.
12. Contractor agrees to submit a summary report to the State of Rhode Island and Providence Plantations Equal Opportunity Office by March 31 of each year during performance of the contract and by March 31 of the year following completion of the contract, in the form prescribed by State Equal Opportunity Office covering employment and complaint

experience accommodations made and all steps taken to effectuate and carry out the commitments set forth in the affirmative action program.

XXIV. CERTIFICATE OF NON-SEGREGATED FACILITIES

Contractor certifies that he/she does not maintain or provide for his/her Employees any segregated facilities at any of his/her establishments, and that he/she does not permit his/her employees to perform their services at any such location, under his/her control, where segregated facilities are maintained. He/she certifies further that he/she will not permit his/her employees to perform their services at any location, under his/her control, where segregated facilities are maintained. Contractor agrees that a breach of this certification is a violation of the Equal Opportunity Clause in this contract. As used in this certification, the term "Segregated Facilities" means any waiting room, work areas, rest rooms, and washrooms, restaurants, and other eating areas, parking lots, drinking fountains, recreation or entertainment areas, transportation, and housing facilities provided for employees which are segregated by explicit directive or are, in fact, segregated on the basis of race, creed, color, or national origin, because of habit, local custom, or otherwise. He/she further agrees that (except where he/she has obtained identical certifications from proposed subcontractors for specific time periods), he/she will obtain identical certifications from proposed subcontractors prior to the award of subcontracts exceeding $10,000, which are not exempt from the provisions of the Equal Opportunity Clause; that he/she will forward the following notice to proposed subcontractors (except where the proposed subcontractors have submitted identical certifications for specific time periods).

XXV. NOTICE OF PROSPECTIVE SUBCONTRACTORS OF REQUIREMENT FOR CERTIFICATION OF NONSEGREGATED FACILITIES

A Certificate of Nonsegregated Facilities must be submitted prior to the award of a sub-contract exceeding $10,000 which is not exempt from the provisions of the Equal Opportunity Clause. The certification may be submitted either for each sub-contractor for all subcontracts during a period (i.e., quarterly, semi-annually, or annually).

NOTE: The penalty for making false statements in offers is prescribed in 18 USA 1001.

A. Affirmative Action Compliance Program

Contractor agrees to develop a written Affirmative Action Compliance Program for each of its establishments as required by Section 60-1.40 of Title 41 of the Code of Federal Regulations.

B. Employer's Information Report (EE)-1) Form 100

Contractor agrees to file in duplicate, Standard Form 100, entitled, **"Equal Employment Opportunity Employer Information Report EEO-1"** as required by Section 60-1.7 of Title 41 of the Code of Federal Regulations.

Send original copy to Federal authorities, duplicate copy to the State Equal Opportunity Office, 1 Capitol Hill, Providence, Rhode Island 02908-5865.

C. Notice to All Vendors

If it should be determined by the State Equal Opportunity Office that any company doing business with the State is guilty of non-compliance with the provisions of this document, said company will be given two (2) written warnings. If the said company does not comply immediately after the second written notice, then the State Equal Opportunity Office will notify the Rhode Island Public Transit Authority, who shall have the authority to have the contract **revoked** and all contractual obligations of the State dealing with the contract in question will be **null** and **void.**

D. Post Award Conference

Post Award Conference for the Implementation of Affirmative Action prior to Signing of Contract.

E. Signature Required

Failure to provide a signature prior to Award to successful Proposers shall be cause for Rejection of Proposal.

XXVI. GENERAL CONTRACT COMPLIANCE CERTIFICATE & AGREEMENT FORM

(Equal Employment Opportunity)

Authorized Signature: _____

Print Name: _____

Title: _____

Company Name: _____

Date: _____

Indicate Job Location Address: _____

PROPOSAL NO. 23-34

XXVII. DAVIS BACON ACT COMPLIANCE

I certify that I will comply with the Provisions of the Davis-Bacon Act for this project. I certify that I will pay the applicable Prevailing Wages as listed at the following web address: **http://www.access.gpo.gov/davisbacon/ri.html**

Authorized Signature: _____

Print Name: _____

Title: _____

Company Name: _____

Date: _____

Indicate Job Location Address: _____

XXVIII. CONTRACTOR APPRENTICESHIP CERTIFICATION FORM

Rhode Island Department of Labor and Training Professional Regulation
(***Applicable to Construction Contracts with a cost in excess of $1 million***)

_____(Company Name & Address) (hereafter "bidder") hereby certifies that bidder meets the general contractor apprenticeship requirements of R. I. Gen. Laws § 37- 13-3.1 because bidder meets one of the following qualifications (check):

A. _____Bidder sponsors a current and duly approved Rhode Island Department of Labor and Training Apprenticeship Program and currently employs at least one apprentice per trade/occupation, who will obtain "on the job training" experience in the apprentice's trade by performing on the contract.

B. _____Bidder sponsors a current and duly registered Rhode Island Department of Labor and Training reciprocal apprenticeship program pursuant to R. I. Gen. Laws § 28-45-16 and currently employs at least one apprentice per trade/occupation, who will obtain "on the job training" experience in the apprentice's trade by performing work on the contract (attach apprenticeship program standards, apprenticeship agreement and Rhode Island Department of Labor and Training Reciprocal Apprenticeship Program Approval);

C. _____Bidder has entered into a current collective bargaining agreement with a duly approved Rhode Island Department of Labor and Training Apprenticeship Program sponsor and, pursuant to the terms of the collective bargaining agreement, will employ at least one apprentice per trade/occupation, who will obtain "on the job training" experience in the apprentice's trade by performing work on the contract (attach relevant section of collective bargaining agreement and signature page).

D. _____Bidder has entered into a current labor agreement with a duly approved Rhode Island Department of Labor and Training Apprenticeship Program sponsor and, pursuant to the terms of the labor agreement, will employ at least one apprentice per trade/occupation, who will obtain "on the job training" experience in the apprentice's trade by performing work on the contract (attach relevant section of labor agreement and signature page).

E. _____Bidder will not perform work on the awarded contract except through subcontractors (nonperformance).

F. _____Bidder has received approval from the Rhode Island Department of Labor and Training that it satisfies the general contractor requirements of R. I. Gen. Laws §37-13-3.1 for purposes of a particular bid (attach Rhode Island Department of Labor and Training correspondence).

_____ _____
Printed Name and Title of Authorized Representative Date

_____
Signature of Authorized Representative

XXIX. CERTIFICATION OF PRIMARY PARTICIPANT FORM

Request for Proposals Number: 23-34
Project Providence Bus Tunnel Drainage and Interior Rehabilitation

The primary participant _____ certifies to the best of its knowledge and belief, that it and its principals:

1) Are not presently debarred, suspended, proposed for debarment, declared eligible, or voluntarily excluded from covered transactions by any Federal Department or Agency.
2) Have not within a three-year period preceding this Proposal been convicted of or had a civil judgment rendered against them for commission of fraud or a criminal offense in connection with obtaining, attempting to obtain, or performing a public (Federal, State, or Local) transaction or contract under a public transaction; violation of Federal or State antitrust statutes or commission of embezzlement, theft, forgery, bribery, falsification or destruction or records, making false statements, or receiving stolen property;
3) Are not presently indicted for or otherwise criminally or civilly charged by a government entity (Federal, State, or Local) with commission of any of the offenses enumerated in paragraph (2) of this certification; and
4) Have not within a three-year period preceding this application/Proposal had one or more public transactions (Federal, State, or Local) terminated for cause or default.
5) The Primary Participant also certifies that, if it later becomes aware of any information contradicting the statements of Paragraphs 1-4 above, it will promptly notify RIPTA.

The primary participant _____, certifies or affirms the truthfulness and accuracy of the contents of the statements submitted on or with this certification and understands that the provisions of 31 U.S.C Sections 3801 **ET SEQ**. are applicable thereto.

_____ _____
Signature/Title of Authorized Official Date

XXX. DEBARMENT CERTIFICATION

CERTIFICATION REQUIREMENTS FOR RECIPIENTS OF GRANTS
AND
COOPERATIVE AGREEMENTS
REGARDING DEBARMENT AND SUSPENSIONS

The purpose of the attached certifications is to exclude entities and individuals that the Federal Government has either debarred or suspended from obtaining Federal assistance funds through grants, cooperative agreements, or third-party contracts.

To assure that such entities and individuals are not involved in projects financed with Federal Transit Administration (FTA) assistance, FTA requires its applicants to complete the certificates.

The primary participant must sign the "**Certification of Primary Participant**" and, if there is a subcontractor, they must sign **the "Certification of a Subcontractor"** (If there is more than one subcontractor, they must all sign one of these forms.).

XXXI. CERTIFICATION OF A SUBCONTRACTOR FORM

Request for Proposals Number: 23-34

Project **Providence Bus Tunnel Drainage and Interior Rehabilitation**

The potential Subcontractor, _____
Certifies, by submission of this certification, that neither it nor its principals are presently debarred, suspended, proposed for debarment, declared ineligible or voluntarily excluded from participation in this transaction by any Federal Department or agency.

The Subcontractor, _____ certifies or affirms the truthfulness and accuracy of the contents of the statements submitted on or with this certification and understands that the provisions of 31 U.S.C. Sections 3801 **ET SEQ**. are applicable thereto.

_____
Signature/Title of Authorized Official

_____ _____
Print Signature Date

XXXII. NON-RESIDENT CONTRACTOR INFORMATION

From: Department of Administration
Division of Taxation
289 Promenade Street
Providence, RI 02908
Notice: "To All Persons Engaging Non-Resident Contractors"
Regulation Re: Contractors and Subcontractors - "Regulation C"
Article III, Non-Resident Contractors
Any individual, partnership, joint venture, corporation, state, municipal government or exempt organization awarding a construction contract in Rhode Island to a non-resident contractor (as hereinafter defined) is required, pursuant to Section 44-1-6 of the General Laws, as last amended, to withhold 3% of the contract price to secure payment of any sales and use tax or income tax withheld, or both, that may be due to the State of Rhode Island in carrying out the contract.

Upon completion of the contract, the non-resident contractor is required to notify the Tax Administration shall, within 30 days after receipt of the request, audit the records and provide by certified mail to the person holding the funds and to the non-resident contractor, either a certificate of no tax due or a notice of taxes due.

The person holding the funds is required to pay to the Tax Administrator the amount set forth in the notice of taxed due, including interest and penalties, but not in excess of 3% of the contract price. Monies withheld in excess of taxes due the Tax Administrator may be paid to the non-resident contractor.
If the Tax Administrator does not furnish a certificate of no tax due or a notice of taxes due within 30 days after receipt of the request for the making of the audit, the person holding the funds may remit the full amount due to the non-resident contractor. The Tax Administrator shall not have any claim against such funds in the hand of the person holding the funds.

DEFINITION OF NON-RESIDENT CONTRACTOR

"A non-resident contractor is one who does not maintain a regular place of business in this state. A regular place of business shall be deemed to mean and include any bona fide office (other than a statutory office), factory, warehouse, or other space in this state at which the taxpayer is doing business in its own name in a regular and systematic manner and which is continuously maintained, occupied, and used by the taxpayer in carrying on its business through its regular employees regularly in attendance. A temporary office at the site of construction shall not constitute a regular place of business".
In order to effectively implement this legislative change, which became effective on passage, non-resident contractors shall forward such notice of completion by certified or registered mail (in duplicate) to the Division of Taxation.
R. Gary Clark
Tax Administrator

XXXIII. DRUG & ALCOHOL TESTING PROGRAM

In accordance with the Federal Transit Administration Rules 49 CFR 40, 653, and 654, pertaining to prohibited drug use and Contract Service Providers who perform safety-sensitive functions as follows:

- Operation of Revenue Service Vehicles in and Out of Service.
- Dispatch or Control Movement of Revenue Service Vehicles.
- Maintain, Repair and Inspect Revenue Service Vehicle.

The standards they must meet are:

1. Provide each employee performing a RIPTA safety-sensitive function a copy of RIPTA's Prohibited Drug Use and Alcohol Misuse Policy and Procedures. Each Employee must sign and return to RIPTA "Confirmation of Receipt" form.
2. Provide RIPTA with documentation that all employees, both full and part-time, participate in a prohibited drug use testing program in compliance with 49 CFR 653 and an alcohol misuse testing program in compliance with 49 CFR 654. Documentation must be provided which ensures that all testing is performed in compliance with 49 CFR 40.
3. Provide to RIPTA's, by February 1st, following each calendar year, annual Management Information Systems (MIS) reports for submission to the FTA. The MIS form used must be that which is contained in 49 CFR 653 and 654.
4. Identify a contact person responsible for handling all 49 CFR 40, 653 and 654 regulation compliance.

XXXIV. DRUG AND ALCOHOL POLICY ACKNOWLEDGEMENT

CONTRACT SERVICE PROVIDER
ACKNOWLEDGEMENT AND CONFIRMATION OF RECEIPT

Employee Name:_____

Company Name: _____

I have received a copy of Rhode Island Public Transit Authority's Prohibited Drug Use and Alcohol Misuse Policy and Procedures.

Employee
Signature: _____ Date: _____

Return To: Drug and Alcohol Test Coordinator
Department of Human Resources
Rhode Island Public Transit Authority
Room 217
705 Elmwood Avenue
Providence, Rhode Island 02907

XXXV. TRAFFICKING IN PERSONS

Contractor agrees that it and its employees that participate in the contract, may not: Engage in severe forms of trafficking in persons during the period of time the contract is in effect, procure a commercial sex act during the period of time that the contract is in effect, or use forced labor in the performance of the contract or subcontracts thereunder. Contractor will inform Agency immediately of any information it receives from any source alleging a violation of the prohibitions listed in section.

_____

President / Vendor Representative

XXXVI. FEDERAL TAX LIABILITY AND RECENT FELONY CONVICTION

The contractor hereby certifies the following:

Does not have any unpaid Federal tax liability that has been assessed, for which all judicial and administrative remedies have been exhausted or have lapsed, and that is not being paid in a timely manner pursuant to an agreement with the authority responsible for collecting the tax liability; and was not convicted of the felony criminal violation under any Federal law within the preceding 24 months.

The contractor agrees to require all subcontractors to provide this certification and to flow this requirement down to participants at all lower tiers, without regard to the value of any subcontract.

_____

President / Vendor Representative

XXXVII. TELECOMMUNICATIONS CLAUSE

VENDOR hereby acknowledges that the John S. McCain National Defense Authorization Act for Fiscal Year 2019, Pub. L. 115232, § 889 (Aug. 13, 2018) (the Act) prohibits the Agency from procuring certain "covered telecommunications equipment or services," as defined in the Act, in federally assisted procurements and that the instant procurement is a federally assisted procurement subject to that prohibition. VENDOR represents and warrants that it has performed a due diligence review of its supply chain and that no such "covered telecommunications equipment or services" shall be provided to the Agency that would cause the Agency to be in violation of the prohibition contained in the Act.

President/ Vendor Representative

XXXV. PROJECT OVERVIEW

The Rhode Island Public Transit Authority is seeking proposals for the rehabilitation of the East Side Tunnel between Thayer Street on the East and North Main Street on the West. The project includes, but is not limited to, the following.

- Obtain all required state permits
- Remove defective concrete on the tunnel walls and arch and replace with new concrete
- Remove deficient tunnel lighting system and replace with a new system
- Replace the incoming electrical service with a new service including all electrical equipment inside the electrical room abutting the West end of the tunnel
- Repair portal facades
- Repair electrical room walls and ceiling place a new concrete floor slab
- Abandon existing roadway drainage system and replace with new drainage system
- Remove electrical room wood door and frame and install metal door and frame
- Close off electrical splice chambers in tunnel
- Replace asphalt in tunnel and approaches
- Line striping
- Replace drainage downspouts
- Install a new tunnel fire standpipe system
- Refurbish the historic bus shelter and replace the missing column
- Reconnect the drain gutters to underground drain pipe

XXXVI. PROPOSAL EVALUATION FACTORS

Candidates shall be evaluated based upon their qualifications and responsiveness to the RFP. Final selection shall be based on the following:

A. Qualifications /Experience /Past Performance in comparable projects – (20 points)

- Describe your company's qualifications as it relates to the scope of this work (certifications, licenses, etc…)
- Provide examples of experience in ongoing and completed projects with similar scope.

B. Timeline (25 Points)

Each proposal should include a project schedule that includes all major milestones, phases of construction, and completion date. A schedule limiting the duration of the project and any interruptions of service is favorable. Priority shall be given to drainage work followed by any work needed to make the roadway accessible for transit buses at the completion of the tunnel closure.

C. Pricing (25 Points)

The respondent can receive up to 25 points for their proposed pricing. This pricing must be inclusive of all scope outlined in the project RFP, schedule, drawings, and specifications. Proposal will not be considered if scope items

areexcluded within the proposal.

D. Safety Program (20 Points)

Each proposal should include a brief description of the contractor's commitment to safety and EMR rating. Please include information on your safety policies, procedures, department, and personnel training.

E. Experience with Construction Administrative Procedures (10 points)

Describe your company's experience/procedures in handling the administrative side of construction as it relates to: Scheduling, Submittals, Construction Project Management Software, Quality control, Invoicing, Project documentation, closeout documentation and As-Built drawings.

Respondents can be awarded up to 100 points based on the requested information in the evaluation criteria. Proposals will be evaluated by an evaluation committee and scored based on the established weights set forth. The proposal receiving the highest combined score will be awarded the contract.

XXXVII. BASIS OF AWARD

This contract will be awarded to the contractor that submits the highest rated proposal of those received. Proposed pricing of project is only a portion of the criteria considered during award. The Rhode Island Public Transit Authority (RIPTA), reserves the right to cancel this RFP, or reject any or all proposals or parts thereof, to waive any formality in same, or accept any proposal deemed to be in the best interest of RIPTA. Any proposal not received by the designated date and time will be determined late and not be considered. Applicants may withdraw their proposals, by written request, prior to, but not after the set time for proposal submission. Thereafter, proposals are irrevocable for a period of not less than one hundred twenty (120) days, and may not be withdrawn or modified.

XXXVIII. PROJECT SPECIFIC TERMS AND CONDITIONS

A. Order of Precedence

In the event of an inconsistency in the Contract, unless otherwise provided herein, the inconsistency shall be resolved by giving precedence in the following order:

1. The Proposal Schedule;
2. Special Conditions;
3. General Provisions;
4. The other provisions of the Contract, whether incorporated by reference or otherwise;
5. The Specifications; and
6. Drawings.
7. Attachments

XXXIX. TIME FOR PROJECT COMPLETION

The construction schedule is assuming to provide NTP to the winning proposer on September 28, 2023 and turn the tunnel over to the contractor on March 25, 2024

weather dependent. The schedule assumes a complete tunnel closure of approximately 6 months.

RIPTA requests Contractors propose a timeline with their earliest possible completion date. The completion date will be agreed upon between Owner and the selected Contractor. The date of Substantial Completion will be the date used for calculating liquidated damages or incentives.

XL. LIQUIDATED DAMAGES

Liquidated Damages will be assessed at the rate of $6000.00 per calendar day after the agreed upon project's Substantial Completion date.

XLI. EARLY COMPLETION INCENTIVE

The contractor will receive an incentive of $6000.00 per calendar day for completion of the project before the agreed upon project's Substantial Completion date. The incentive will be limited to a maximum of 10 days

XLII. PROJECT SCHEDULE

Issue Request for Proposals	June 29, 2023
Pre-Bid Meeting with on-site tour following	July 13, 2023 at 10 am
Deadline to submit Questions and Request for Approved Equals and Changes	July 20, 2023 at 1:00 pm

Request for Approved equals and Questions

must be submitted ELECTRONICALLY IN MICROSOFT WORD FORMAT to RIPTA Contracts Manager by:

1. Date: **July 20, 2023**
2. Time: 1:00 p.m. Eastern Time
3. Response to approved equals: **5-10** days prior to Proposal opening.

Please submit all your questions in writing in one document by the deadline above; do not submit them piecemeal.

Requests for Approved Equals must be accompanied by adequate Technical Information for the Authority to review. Requests submitted with insufficient information will not be considered.

Requests for Approved Equals/Questions submitted after the deadline will NOT be considered

It should be noted that Requests for Approved Equals/Questions can be used for both questions regarding the technical specifications and regarding contractual terms and conditions

RHODE ISLAND PUBLIC TRANSIT AUTHORITY
Request for Proposals Number 23-34
SCOPE OF WORK

Approved Equals must be submitted by the Prime Contractors only. Potential Subcontractors must coordinate with Prime Contractors for submission of any products they wish to submit.

Last day for RIPTA to issue addenda and clarifications	5-10 days prior to Deadline to Submit Proposals
Deadline to Submit Proposals	August 10, 2023, at 1:00 pm
Board Consideration of Approval Meeting	September 27, 2023, Board

The dates listed below are based upon Board Approval at the September 27, 2023, meeting. If approval is delayed the schedule will be adjusted to reflect the delay.

Notify Participants of Award	September 28, 2023
Turn Site over to Contractor	March 25, 2024 (weather dependent)
Substantial Completion	September 24, 2024

RHODE ISLAND PUBLIC TRANSIT AUTHORITY

East Side Tunnel Rehabilitation

Specifications

Dated: June 2023

Location:
East Side Tunnel
Providence, RI 02903

Owner:
RIPTA – Rhode Island Public Transit Authority
705 Elmwood Avenue
Providence, RI 02907

Engineer:
WSP USA
BLDG 5
166 Valley Street
Providence, Rhode Island 02909

SECTION 00 01 00 – TABLE OF CONTENTS

SECTION 00 01 50 – LIST OF DRAWINGS
RIPTA – East Side Tunnel Rehabilitation

Dated: June 29, 2023

Drawing No.	Drawing Title
G-01	COVER SHEET
G-02	STANDARD PLAN SYMBOLS & STANDARD LEGEND
G-03	STANDARD NOTES
EX-01	EXISTING TUNNEL PLAN 1
EX-02	EXISTING TUNNEL PLAN 2
EX-03	EXISTING TUNNEL PLAN 3
EX-04	EXISTING TUNNEL PLAN 4
EX-05	EXISTING ELEVATION 1 - LOOKING NORTH
EX-06	EXISTING ELEVATION 2 - LOOKING NORTH
EX-07	EXISTING ELEVATION 3 - LOOKING SOUTH
EX-08	EXISTING ELEVATION 4 - LOOKING SOUTH
EX-09	EXISTING PORTAL DEFECTS
EX-10	EXISTING ELECTRICAL ROOM SHEET 1 OF 2
EX-11	EXISTING ELECTRICAL ROOM SHEET 2 OF 2
EX-12	EXISTING TYPICAL CROSS SECTIONS
XS-01	COMPOSITE TYPICAL SECTIONS
S-01	STEEL FRAMING REPAIR PLAN
S-02	STRUCTURAL REPAIR ELEVATION 1 - LOOKING NORTH
S-03	STRUCTURAL REPAIR ELEVATION 2 - LOOKING NORTH
S-04	STRUCTURAL REPAIR ELEVATION 3 - LOOKING NORTH
S-05	STRUCTURAL REPAIR ELEVATION 4 - LOOKING NORTH
S-06	STRUCTURAL REPAIR ELEVATION 5 - LOOKING NORTH
S-07	STRUCTURAL REPAIR ELEVATION 6 - LOOKING SOUTH
S-08	STRUCTURAL REPAIR ELEVATION 7 - LOOKING SOUTH
S-09	STRUCTURAL REPAIR ELEVATION 8 - LOOKING SOUTH
S-10	STRUCTURAL REPAIR ELEVATION 9 - LOOKING SOUTH
S-11	STRUCTURAL REPAIRELEVATION 10- LOOKING SOUTH
S-12	PORTAL REPAIRS
S-13	ELECTRICAL ROOM REPAIR PLAN SHEET 1 OF 2
S-14	ELECTRICAL ROOM REPAIR PLAN SHEET 2 OF 2
S-15	STRUCTURAL TUNNEL REPAIR DETAILS 1
S-16	STRUCTURAL TUNNEL REPAIR DETAILS 2
S-17	STRUCTURAL TUNNEL REPAIR DETAILS 3
S-18	STRUCTURAL TUNNEL REPAIR DETAILS 4
S-19	STRUCTURAL TUNNEL REPAIR DETAILS 5
S-20	STRUCTURAL TUNNEL NICHE CLOSURE DETAILS
S-21	STRUCTURAL TUNNEL ATTACHMENT DETAILS 1
S-22	STRUCTURAL TUNNEL DEFLECTOR DETAILS

S-23 - STRUCTURAL BUS SHELTER REPAIR DETAILS 1
S-24 - STRUCTURAL BUS SHELTER REPAIR DETAILS 2
S-25 - STRUCTURAL BUS SHELTER REPAIR DETAILS 3
A-01 - ARCHITECTURAL SYMBOLS, NOTES, AND ABBREVIATIONS
A-02 - OVERALL BUS SHELTER FLOOR DEMOLITION PLAN & PHOTOS
A-03 - OVERALL BUS SHELTER DEMOLITION ELEVATIONS, PLAN & PHOTOS
A-04 - OVERALL BUS SHELTER CEILING DEMOLITION PLAN & PHOTOS
A-05 - OVERALL BUS SHELTER ROOF DEMOLITION PLAN & PHOTOS
A-06 - OVERALL BUS SHELTER FLOOR NEW WORK FLOOR, CEILING AND ROOF PLANS
A-07 - ROOF AND CEILING DETAILS
A-08 - CEILING DETAILS
A-09 - DOOR DETAILS, SIGNAGE
C-01 - DRAINAGE PLAN 1
C-02 - DRAINAGE PLAN 2
C-03 - DRAINAGE PLAN 3
C-04 - DRAINAGE PLAN 4
C-05 - CIVIL DETAILS - SHEET 1 OF 6
C-06 - CIVIL DETAILS - SHEET 2 OF 6
C-07 - CIVIL DETAILS - SHEET 3 OF 6
C-08 - CIVIL DETAILS - SHEET 4 OF 6
C-09 - CIVIL DETAILS - SHEET 5 OF 6
C-10 - CIVIL DETAILS - SHEET 6 OF 6
M-01 - GENERAL NOTES, ABBREVIATIONS, SYMBOLS, SCHEDULES
M-02 – MECHANICAL EXIST. & PROP. PLANS, DETAILS & AUTOMATIC TEMPERATURE CONTROLS
L-01 - LIGHTING LEGEND, ABBREVIATIONS AND GENERAL NOTES
L-02 - LIGHTING PLAN 1
L-03 - LIGHTING PLAN 2
L-04 - LIGHTING PLAN 3
L-05 - LIGHTING PLAN 4
L-06 - LIGHTING DETAILS 1
L-07 - LIGHTING DETAILS 2
L-08 - LIGHTING DETAILS 3
L-09 - LIGHTING DETAILS 4
FP-01 - FIRE PROTECTION NOTES, SYMBOLS & LEGEND
FP-02 - FIRE PROTECTION PLAN & ELEVATION 1
FP-03 - FIRE PROTECTION PLAN & ELEVATION 2
FP-04 - FIRE PROTECTION PLAN & ELEVATION 3
FP-05 - FIRE PROTECTION PLAN & ELEVATION 4
FP-06 - FIRE PROTECTION DETAILS SHEET 1 OF 2
FP-07 - FIRE PROTECTION DETAILS SHEET 2 OF 2
TR-01 - PAVEMENT MARKING PLAN
TR-02 - SIGNING PLAN
TR-03 - TRAFFIC CONTROL

END OF SECTION

SECTION 00 10 00 – RFP SOLICITATION SUMMARY

General Information			
Project Name	RIPTA – Providence Bus Tunnel Drainage and Interior Rehabilitation		
Project Description	The project includes, but is not limited to, the following. - Remove defective concrete on the tunnel walls and arch and replace with new concrete - Remove deficient tunnel lighting system and replace with a new system - Replace the incoming electrical service with a new service including all electrical equipment inside the electrical room abutting the West end of the tunnel - Repair portal facades - Repair electrical room walls and ceiling place a new concrete floor slab - Abandon existing roadway drainage system and replace with new drainage system - Remove electrical room wood door and frame and install metal door and frame - Close off electrical splice chambers in tunnel - Replace asphalt in tunnel and approaches - Line striping - Replace drainage downspouts - Install a new tunnel fire standpipe system - Refurbish the historic bus shelter and replace the missing column - Reconnect the drain gutters to underground drain pipe		
Project Start Date/Length	Fall 2023 – See Attachment C for activities		
Completion	Winter 2024 - See Attachment C for activities		
Contract Type	RI AIA Documents		
Funding Source	☐ Local	☒ State	☒ Federal
DBE Goal	Not applicable, however encouraged.		
Pre-Bid Meeting	Date: 7/13/23 Time: 10 am Location: RIPTA Board Conference Room 269 Melrose Street, Providence, RI 02907 With following site tour		
Procurement Process Information			
Contract Manager *All correspondence during RFP must be through the Contract Manager.	Sheryl Gomes, Contract Manager Purchasing Department, Room 217 705 Elmwood Avenue, Providence, RI 02907 401-781-9400, x1281, sgomes@RIPTA.com		

Projected RFP Schedule: Please refer to RIPTA Procurement for updates to all dates and times.

Issue Request for Proposals	6/29/23	
Pre-Bid Meeting with on-site tour following	7/13/23	10 am
Deadline to submit Questions and Request for Approved Equals to RIPTA	7/20/23	1:00 pm
Deadline to Submit Proposals	8/10/23	1:00 pm
Board Consideration of Approval	9/27/23	Board Meeting
Notice of Award to bidder	9/28/23	
Turn Site over to Contractor (Tunnel Closed Milestone 0)	3/25/24 (weather dependent)	
Substantial Completion	9/24/24	

The construction schedule is assuming to provide notice of award to the winning proposer on September 28, 2023, and start work in the tunnel on March 25, 2024.The schedule assumes a complete tunnel closure of approximately 6 months. The RIPTA requests Contractors to propose a timeline with their earliest possible completion date. The completion date will be agreed upon between Owner and the selected Contractor. The date of the Project's Substantial Completion will be the date used for calculating liquidated damages or incentives.

Proposal Evaluation Criteria: Candidates shall be evaluated based upon their qualifications and responsiveness to the RFP. Final selection shall be based on the following: A. Qualifications / Experience / Past performance in comparable projects. B. Proposed Project Timeline C. Safety Program D. Experience with construction administrative procedures. E. Pricing Respondents can be awarded up to 100 points based on the requested information in the evaluation criteria. Proposals will be evaluated by an evaluation committee and scored based on the established weights set forth.	Qualifications /Experience /Past Performance in comparable projects – (20 points) -Describe your company's qualifications as it relates to the scope of this work (certifications, licenses, etc…) -Provide examples of experience in ongoing and completed projects with similar scope. Timeline (25 Points) Each proposal should include a project schedule that includes all major milestones, phases of construction, and completion date. A schedule limiting the duration of the project and any interruptions of service is favorable. Priority shall be given to drainage work followed by any work needed to make the roadway accessible for transit buses at the completion of the tunnel closure. Pricing (25 Points) The respondent can receive up to 25 points for their proposed pricing and responsiveness to scope. This pricing must be inclusive of all scope outlined in the project RFP, schedule, drawings, and specifications. Proposal will not be considered if scope items are excluded within the proposal. Safety Program (20 Points) Each proposal should include a brief description of the contractor's commitment to safety and EMR rating. Please include information on your safety policies, procedures, department, and personnel training. Experience with Construction Administrative Procedures (10 points) Describe your company's experience/procedures in handling the administrative side of construction as it relates to: Scheduling, Submittals, Construction Project Management Software, Quality control, Invoicing, Project documentation, closeout documentation and As-Built drawings.
Basis of Award	This contract will be awarded to the contractor that submits the highest rated proposal of those received. Proposed pricing of project is only a portion of the criteria considered during award. The Rhode Island Public Transit Authority (RIPTA), reserves the right to cancel this RFP, or reject any or all proposals or parts thereof, to waive any formality in same, or accept any proposal deemed to be in the best interest of RIPTA. Any proposal not received by the designated date and time will be determined late and not be considered. Applicants may withdraw their proposals by written request, prior to, but not after the set time for proposal submission. Thereafter, proposals are irrevocable for a period of not less than one-hundred twenty (120) days, and may not be withdrawn or modified.
Liquidated Damages	Liquidated Damages will be assessed at the rate of $6000.00 per calendar day after the agreed upon project's Substantial Completion date.
Project Incentives	The contractor will receive an incentive of $6000.00 per calendar day for completion of the project before the agreed upon the project's Substantial Completion date. The incentive will be limited to a maximum of 10 days

Proposal Contents

Proposal Copies Required:

- One (1) Original
- One (1) Electronic Copy (thumb drive)

Proposal Content:

- Proposal shall include information that addresses all aspects of the proposal evaluation criteria and any other pertinent information.
- Completed Bid Form "Attachment H"
- Completed forms from RIPTA Procurement's "Request for Proposal" listed below:
  - Required Company Information Form
  - Solicitation Form
  - Offer Form
  - Statement of Eligibility Form
  - Affidavit of Non-Collusion Form
  - Certification of Restrictions on Lobbying Form
  - Buy America Certification Requirements For Procurement of Steel or Manufactured Products
  - Buy America Certification Requirements of Procurement of Buses, Rolling Stock, and Associated Equipment
  - Schedule of DBE Participation
  - DBE Application Agreement
  - Letter of Intent to Perform as a Sub-contractor
  - DBE Good Faith Effort Summary Sheet
  - Narrative Explanation for Lack of DBE Participation E
  - Documentation of DBE Utilization F
  - General Contract Compliance Certificate & Agreement Form (EEO
  - Contractor Apprenticeship Certification Form
  - Certification of Primary Participant Form
  - Debarment Certification
  - Drug & Alcohol Testing Program (if applicable)
  - Notice of Designation as Independent Contractor
  - W-9 Request for Taxpayer Identification Number and Certification

RFP Documents/References

RIPTA – East Side Tunnel Rehabilitation Drawings - Dated: June 2023
RIPTA – East Side Tunnel Rehabilitation Specifications – Dated: June 2023
RIPTA – East Side Tunnel Rehabilitation Listing of Activities
AIA Document A101-2017 RI (Available for preview at www.aiacontracts.org)
AIA Document A201-2017 RI (Available for preview at www.aiacontracts.org)
AIA G702-1992 (Available for preview at www.aiacontracts.org)
AIA G703-1992 (Available for preview at www.aiacontracts.org)
Bid Form

BACKGROUND
The East Side Transit Tunnel is a critical piece of historic transit infrastructure connecting downtown Providence and Kennedy Plaza to the East Side and beyond. The Tunnel was built in 1914 to aid the former trolley lines in climbing College Hill. RIPTA has procured design and construction documents for the Rehabilitation of this tunnel.
SCOPE OF Project:
Includes, but not limited to: 1. Remove defective concrete on the tunnel walls and arch and replace with new concrete 2. Remove deficient tunnel lighting system and replace with a new system 3. Replace the incoming electrical service with a new service including all electrical equipment inside the electrical room abutting the West end of the tunnel 4. Repair portal facades 5. Repair electrical room walls and ceiling place a new concrete floor slab 6. Abandon existing roadway drainage system and replace with new drainage system 7. Remove electrical room wood door and frame and install metal door and frame 8. Close off electrical splice chambers in tunnel 9. Replace asphalt in tunnel and approaches 10. Line striping 11. Replace drainage downspouts 12. Install a new tunnel fire standpipe system 13. Refurbish the historic bus shelter and replace the missing column 14. Reconnect the drain gutters to underground drain pipe

END OF SECTION

SECTION 00 41 00 - BID FORM

BID OFFER FORM

RIPTA – Providence Bus Tunnel Drainage and Interior Rehabilitation

Providence, RI 02903

BIDDER INFORMATION

Contractors Name: _____

Street Address: _____

City, State, Zip: _____

Phone: _____

Contact Person: _____

Date Completed: _____

OFFER

A. Having examined the place of the Work and all matters referred to in the Contract Documents prepared by WSP (Owner's designee for the above-mentioned project) and Rhode Island Public Transit Authority (Owner), we, the undersigned, hereby offer to enter into a Contract to perform the Work, Providence Bus Tunnel Drainage and Interior Rehabilitation, for the amount indicated below, subject to the additions and deductions according to the terms of the Contract Documents and as stated below. The undersigned will provide all necessary and proper material, machinery, equipment, facilities, and means to complete the Work.

B. This bid includes Addenda numbered (to be filled in by Bidder, if addenda are issued):

   Addenda No. 1 Dated: _____

   Addenda No. 2 Dated: _____

C. The undersigned herby understands that the Owner has the right to reject any and all bids and to award the contract in the best interest of the Owner. The Owner reserves the right to award the entire project or delete portions of the work to funds available, whichever is in the best interest of the Owner.

D. The undersigned also understands that the contract must be carried out in strict accordance with the Contract Documents.

PROJECT:	East Side Tunnel Rehabilitation	RIDOT NO.:	
PTS #:		SHEET NO.:	
COMPUTED BY:	CHECKED BY	DATE:	

QUANTITIES

ITEM NO.	DESCRIPTION	QTY	UNITS	UNIT PRICE	AMOUNT
201.0420	REMOVE AND DISPOSE CONCRETE SLAB	292	SY		
201.0428	REMOVAL AND DISPOSAL OF EXISTING CATCH BASIN GRATES	22	EA		
201.9901	REMOVE AND DISPOSE TUNNEL LIGHTING SYSTEM	1	LS		
201.9902	SELECTIVE DEMOLITION	1	LS		
202.0100	EARTH EXCAVATION	193	CY		
203.0600	FILL GRAVEL BORROW UNDER STRUCTURES	4	CY		
401.1000	CLASS 12.5 HMA	1,020	TON		
601.0200	CLASS XX PORTLAND CEMENT CONCRETE	22	CY		
601.0501	CLASS B PORTLAND CEMENT CONCRETE	320	CY		
701.0512	REINFORCED CONCRETE PIPE M 170 CLASS IV 12 INCH	100	LF		
701.5204	4 INCH DUCTILE IRON PIPE	1,360	LF		
701.9901	FIRE STANDPIPE SYSTEM PIPING AND APPURTENANCES	1	LS		
701.9902	METAL DUCTS	1	LS		
701.9903	AIR DUCT ACCESSORIES	1	LS		
701.9904	CENTRIFUGAL HVAC FANS	1	LS		
701.9905	UNIT HEATERS	1	LS		
701.9906	MODULAR SEAL SYSTEM FOR CONNECTION TO EXISTING WALL DRAINS	62	EA		
702.0210	SOLID BLOCK SHALLOW 4'-0" ROUND MANHOLE STANDARD 3.2.2	1	EA		
702.0605	PRECAST 4'-0" ROUND CATCH BASIN	2	EA		
702.0722	SOLID BLOCK SHALLOW TYPE "F" CATCH BASIN	4	EA		
703.9901	12 INCH POLYMER COATED CORRUGATED STEEL PIPE	3,236	LF		
703.9902	12 INCH SLOTTED DRAIN PIPE - 6 INCH GRATE (CORRUGATED STEEL PIPE)	640	LF		
703.9903	12 INCHFABRICATED CLEAN-OUT TEE (CORRUGATED STEEL PIPE)	26	EA		
703.9904	12 INCH X 6 INCH FABRICATED WYE (CORRUGATED STEEL PIPE)	26	EA		
703.9905	CELLULAR GLASS INSULATION FOR DUCTILE IRON PIPE - 1 INCH THICK	914	LF		
703.9906	GUTTER DRAIN CONNECTION	1	LS		
806.9901	EXTERIOR FINISH CARPENTRY	1	LS		
806.9902	BUS SHELTER TIE BEAM	1	EA		
807.0200	SPLIT FACE MASONRY	15	CY		
807.0350	MASONRY REPOINTING OF MORTAR JOINTS	12,540	LF		
807.0351	MASONRY REPAIR	279	SF		
807.0352	MASONRY CLEANING	2,090	SF		
810.0210	GALVANIZED BAR REINFORCEMENT GRADE 60	300	lbs		
810.0702	WELDED WIRE FABRIC (GALVANIZED)	1,077	SF		
817.9901	REPAIRS TO STRUCTURE CONCRETE MASONRY - SPALLS - S1	10	SF		
817.9902	REPAIRS TO STRUCTURE CONCRETE MASONRY - SPALLS - S2	1,457	SF		
817.9903	REPAIRS TO STRUCTURE CONCRETE MASONRY - SPALLS - S3	71	SF		
817.9904	REPAIRS TO STRUCTURE CONCRETE MASONRY - SPALLS - S4	10	SF		
817.9905	REPAIRS TO STRUCTURE CONCRETE MASONRY - SHOTCRETE	39	CY		
819.0800	DRILL AND GROUT REINFORCING DOWELS	7,788	EA		
819.0900	DRILL AND SET CONCRETE EXPANSION ANCHORS	1,000	EA		
820.0100	CONCRETE SURFACE TREATMENT PROTECTIVE SEALER	1,644	SF		
820.0200	HIGH PRESSURE WATER CLEANING OF CONCRETE SURFACES	97,000	SF		
824.0000	STRUCTURAL STEEL REPAIRS	3,953	LBS		
824.0710	STAINLESS STEEL FURNISH FABRICATE AND ERECT ELETRICAL CONDUIT AND LUMINAIRE SUPPORTS	10,000	LBS		
824.9901	STAINLESS STEEL DOORS AND FRAMES, DOOR HARDWARE, SEALANT	1	EA		
824.9902	BUS SHELTER CAST COLUMN	1	EA		
825.8025	SURFACE PREPARATION TO SSPC-SP6 STANDARDS	128	SF		
825.9901	STRUCTURAL FIRE PROTECTION	5,000	SF		
830.9901	MIRROR DEFLECTOR - STRUCTUAL STEEL	32	EA		
836.0100	STRUCTURAL CONCRETE CRACK REPAIR BY EPOXY-RESIN BASE ADHESIVE INJECTION	295	LF		
836.9901	REPAIRS TO STRUCTURE CONCRETE MASONRY - LEAKING CRACK REPAIRS - C2	10	LF		
836.9902	REPAIRS TO STRUCTURE CONCRETE MASONRY - LEAKING CRACK REPAIRS - C3	10	LF		
836.9903	REPAIRS TO STRUCTURE CONCRETE MASONRY - LEAKING CRACK REPAIRS - C4	1,622	LF		
840.0100	DECK SURFACE CONCRETE REMOVAL BY HYDRODEMOLITION	67,386	SF		
842.0100	ANTI GRAFFITI COATING	28,750	SF		
842.9901	PAINTING	28,700	SF		
901.0700	GUARDRAIL ENERGY ABSORBING TERMINAL IMPACT ATTENUATOR	1	EA		
932.0200	FULL-DEPTH SAWCUT OF BITUMINOUS PAVEMENT	8,500	LF		
932.0230	FULL DEPTH SAWCUT OF PORTLAND CEMENT CONCRETE SIDEWALK/DRIVEWAY	8,500	LF		
935.0400	REMOVING BITUMINOUS PAVEMENT BY MICRO MILLING	44,775	SF		
T04.9901	XHHW LSZH - 12 AWG	2,139	LF		
T04.9902	XHHW LSZH - 10 AWG	8,234	LF		

PROJECT:	East Side Tunnel Rehabilitation	RIDOT NO.:	
PTS #:		SHEET NO.:	
COMPUTED BY:	CHECKED BY	DATE:	

QUANTITIES

T04.9903	XHHW LSZH - 8 AWG	5,643	LF		
T04.9904	XHHW LSZH - 6 AWG	3,960	LF		
T04.9905	XHHW LSZH - 4 AWG	6,600	LF		
T04.9906	XHHW LSZH - 2 AWG	28,605	LF		
T05.9901	PULL BOX - 12" X 12" X 6"	24	EACH		
T05.9902	PULL BOX - 16" X 16" X 6"	65	EACH		
T06.5220	2" SCHEDULE 80 POLYVINYLE CHLORIDE PLASTIC CONDUIT UNDERGROUND	220	LF		
T06.9901	3/4" LMFC	713	LF		
T06.9902	1" RTRC	495	LF		
T06.9903	2" RTRC	6,084	LF		
T09.1000	SERVICE PEDESTAL	1	EACH		
T07.9901	FURNISH AND INSTALL TUNNEL LUMINAIRE - 102W (TYPE L1 & L4)	55	EA		
T07.9902	FURNISH AND INSTALL TUNNEL LUMINAIRE - 210W (TYPE L2)	38	EA		
T07.9903	FURNISH AND INSTALL TUNNEL LUMINAIRE - 140W (TYPE L3)	18	EA		
T07.9904	FURNISH AND INSTALL ELECTRICAL ROOM LUMINAIRE	2	EA		
T07.9905	TUNNEL LIGHTING CONTROL SYSTEM	1	LS		
T07.9907	FURNISH AND INSTALL BUS SHELTER LUMINAIRE	9	EA		
T07.9911	FURNISH TUNNEL LUMINAIRE (SPARE) - 102W (TYPE L1 & L4)	2	EA		
T07.9922	FURNISH TUNNEL LUMINAIRE (SPARE) - 210W (TYPE L2)	2	EA		
T07.9933	FURNISH TUNNEL LUMINAIRE (SPARE) - 140W (TYPE L3)	2	EA		
T15	DIRECTIONAL, REGULATORY, TACTILE BRAILLE, HOSE VALVE SIGNS	1	LS		
T18.9901	BARRIER WALL DELINEATORS	450	EA		
T20.2412	12 INCH WHITE FINAL EPOXY RESIN PAVEMENT MARKINGS	26	LF		
T20.2804	4 INCH YELLOW FINAL EPOXY RESIN PAVEMENT MARKINGS	4,360	LF		
T20.2806	6 INCH YELLOW FINAL EPOXY RESIN PAVEMENT MARKINGS	4,360	LF		
T20.9901	PRE-FORMED PRE-PATTERNED PAVEMENT MARKING MATERIAL	4,360	LF		
T20.9902	LINEAR DELINEATION SYSTEM PANELS	32	EA		
M05.04.9	METAL CASTINGS	1	EA		
M05.04.10	COPPER ROOF CEILING AND ORNAMENTS	1	LS		

ALLOWANCES

T07.9906	TUNNEL LIGHTING SERVICE CONTRACT	1	LS	$ 180,000.00	$ 180,000.00
300.2250	LOAD HAUL AND DISPOSE OF CONTAMINATED SOIL PER SECTION 300225	350	TN	$ 77.11	$ 26,988.50
T09.1000	SERVICE PEDETAL - RI Energy CoT	1	LS	$ 7,052.82	$ 7,052.82

Subtotal	$	214,041
15% E+C	$	-
Total	$	214,041

TOTAL BASE BID PRICE

FOR PURPOSES OF BID COMPARISON, TOTAL BASE BID PRICE FOR: UNIT PRICE BID ITEMS, AND ALLOWANCE ITEM 1 AND 2.

$ _____(Amount in Figures)

$ _____(Amount in Words)

BID FORM SIGNATURE(S)

The Corporate Seal of

_____

(Bidder – Please print the full name of your Proprietorship, Partnership, or Corporation)

Was hereunto affixed in the presence of:

_____

(Authorized Signee) (Title) (Date)

(Seal)

_____

(Notary Public Signature and Seal) (Date)

If the Bid is a joint venture of partnership, add additional forms of execution for each member of the joint venture in the appropriate form of forms as above.

END OF SECTION

DIVISION 01

SECTION 01 10 00 – SUMMARY

PART 1 – GENERAL

1.1 Summary

A. Section Includes:
1. Project information.
2. Work covered by Contract Documents.
3. Schedule
4. Access to Project Site.
5. Work restrictions.
6. Requires Licenses

1.2 References

All work indicated on the plans and in the specifications shall conform to:
The Rhode Island Department of Transportation Standard Specifications for Road and Bridge Construction (RI Standard Specifications), 2004 Edition (amended March 2018) with all revisions and addenda. Standard details for this work are R.I. Standard Details 1998 Edition (amended June 2019) with all revisions.

Attachment A: RIPTA – East Side Tunnel Rehabilitation Drawings - Dated: June 2023
Attachment B: RIPTA – East Side Tunnel Rehabilitation Specifications – Dated: June 2023
Attachment C: RIPTA – East Side Tunnel Rehabilitation Listing of Activities

Attachment D: AIA Document A101-2017 RI (Available for preview at www.aiacontracts.org)

Attachment E: AIA Document A201-2017 RI (Available for preview at www.aiacontracts.org)

Attachment F: AIA G702-1992 (Available for preview at www.aiacontracts.org)

Attachment G: AIA G703-1992 (Available for preview at www.aiacontracts.org)

Attachment H: Bid Form

1.3 Project Information

A. Project Identification: Providence Bus Tunnel Drainage and Interior Rehabilitation

B. Project Code: Tunnel

C. Project Location: East Side Tunnel, Providence, RI 02903

D. Owner: Rhode Island Public Transit Authority
1. Owner's Representative: Mr. John Plouffe, Project Management, RIPTA

2. Owner's Address: 705 Elmwood Avenue, Providence, RI 02907
3. Owner's Telephone: 401-573-4777

E. Owner's Designee: WSP
1. Owner's Designee Representative: Sabine Quinn, PE
2. Owner's Designee Address: BLDG 5 166 Valley Street Providence. Rhode Island 02909
3. Owner's Designee Representative Telephone: 617-960-4926

1.4 Work Covered By Contract Documents

A. Description of Work: The Work includes, but is not limited to, the following general item descriptions:
1. Remove defective concrete on the tunnel walls and arch and replace with new concrete
2. Remove deficient tunnel lighting system and replace with a new system
3. Replace the incoming electrical service with a new service including all electrical equipment inside the electrical room abutting the West end of the tunnel
4. Repair portal facades
5. Repair electrical room walls and ceiling place a new concrete floor slab
6. Abandon existing roadway drainage system and replace with new drainage system
7. Remove electrical room wood door and frame and install metal door and frame
8. Close off electrical splice chambers in tunnel
9. Replace asphalt in tunnel and approaches
10. Line striping
11. Replace drainage downspouts
12. Install a new tunnel fire standpipe system
13. Refurbish the historic bus shelter and replace the missing column
14. Reconnect the drain gutters to underground drain pipe

1.5 Type of Contract:

A. Project will be constructed under a single prime contract utilizing RI AIA documents.

1.6 Contract Schedule

A. The number of days within which, or the dates by which, have been approved by the Owner and Bidder in the Contract Schedule. The Work is to be completed and ready for final payment as set forth in the Agreement.

B. The Agreement will establish dates and/or durations for the following:
1. Issuing of Contract
2. Submittal Submission
3. Submittal Approval
4. Mobilization
5. Commissioning and Training
6. Milestone 1- Tunnel Work Completion Except Lighting, Fire Standpipe, Fire Proofing, Painting & Signs

7. Milestone 2 - All Scope of Work Completion / Tunnel Open for Bus Traffic
8. Demobilization
9. Substantial Completion
    a. Substantial Completion occurs when the project, or a portion of the project, is fit for its intended use and the Owner can occupy and use the property.
10. Punch List
11. Completion of Project

C. A detailed project schedule shall be developed by the Contractor, and approved by the Owner, 21 days after Notice to Proceed outlining project activities, phases, milestones, shut downs, cutovers, or any other pertinent information.
    1. The Contractor shall maintain a Gantt chart schedule from award of contract through final closeout and make the schedule readily available for the Owner and project team.
    2. Schedule shall include the following:
        a. Project Name, Run Date, Revision Number
        b. Duration (Working Days)
        c. Duration (Calendar Days)
        d. Activity Start and Finish dates
        e. Actual Activity start and Finish dates
        f. Activity Predecessors and Successors
    3. Coordinate and sequence Work to limit the duration of disturbance to project site.
    4. Coordinate Work to limit inactivity after Mobilization.
    5. Schedule should be updated <u>weekly</u> and be available for discussion during project meetings. Updated schedules will be subject to approval by the Owner.

D. The Contractor shall not sequester shared float through such strategies as extending activity duration estimates to consume available float, using preferential logic, or using extensive crew/resource sequencing, etc. Since float time within the schedule is jointly owned, no time extensions will be granted nor delay damages paid until a delay occurs which extends the work beyond the contract completion date. Since float time within the construction schedule is jointly owned, it is acknowledged that Owner caused delays on the Project may be offset by Owner caused timesaving (i.e., critical path submittals returned in less time than allowed by the contract, approval of substitution requests and credit changes which result in a savings of time to the Contractor, etc.). In such an event, the Contractor shall not be entitled to receive a time extension or delay damages until all Owner caused timesaving are exceeded and the contract completion date is also exceeded.

E. A detailed <u>3</u> Week Look-Ahead shall be submitted weekly outlining upcoming tasks, inspections, phase changes, shut downs, cutovers, and anything required of the Owner for the listed activities to stay on schedule.

1.6 Access To Project Site

A. General: Contractor shall have use of premises within contract limits, also referred to as the Limit of Disturbance, as shown on the Drawings for construction operations. Contractor's

use of premises is limited by the Owner's right to perform work or to retain other contractors on portions of Project.

B. Use of surrounding areas: Limit use of the surrounding area outside the Limits of Disturbance, to Work in areas shown on Drawings. Do not disturb areas beyond which the Work is indicated. The area, outside of the Limits of Disturbance, is available during construction after coordination and approval by Owner. Storage of materials, equipment, and vehicles shall be within the Limit of Disturbance and shall be for use on the project where stored.

C. Driveways, Walkways and Entrances: Keep driveways and entrances around the project site clear and available to Owner, Owner's employees, and emergency vehicles at all times. Do not use these areas for parking or storage of materials. Coordinate temporary blockage of these areas with Owner.

D. Access to the South Wall of the shelter will be through Rhode Island School of Design (RISD) property and must be coordinated with the Owner and RISD. Contractor shall provide 48 hour written notice to RISD before commencing any work on this South Wall. Contact name and telephone number and email address for RISD is as follows: Julia Parker, Director PD&C, jparke01@risd.edu, 203-444-7564.

E. Contractor shall be solely responsible for initiating, maintaining, and supervising all safety precautions and programs in connection with the performance of the Contract. The Contractor shall implement, erect, and maintain, as required by existing conditions and performance of the Contract, reasonable safeguards for safety and protection, including posting danger signs and other warnings against hazards; promulgating safety regulations; and notifying owners and users, such as RISD, of adjacent sites and utilities of the safeguards.

F. The Contractor shall take reasonable precautions for safety of, and shall provide reasonable protection to prevent damage, injury, or loss to (a) employees on the Work and other persons who may be affected thereby including but not limited to all employees and students at RISD; (b) and other property at the site or adjacent thereto including but not limited to RISD property and equipment as well as pavements, roadways, structures, and gas lines, underground utilities, and above-ground utilities which are not designated for removal, relocation, or replacement in the course of construction for the Project.

G. The Contractor shall promptly remedy damage and loss to property referred to in Section C caused in whole or in part by the Contractor, a Subcontractor, a Sub-subcontractor, or anyone directly or indirectly employed by any of them, or by anyone for whose acts they may be liable and for which the Contractor is responsible under Sections B and C. The repairing, restoring, rebuilding, or making good such damage or injury shall be at no additional cost to the Owner or RISD.

H. To the fullest extent permitted by law, the Contractor shall indemnify and hold harmless the Owner, RISD and members of RISD's Board of Trustees, and the officers, employees, agents, and representatives, of any of them (the "Indemnitees") from and against claims, damages, losses, and expenses, including but not limited to attorneys' fees, arising out of or resulting

from performance of the Work, provided that such claim, damage, loss, or expense is attributable to bodily injury, sickness, disease or death, or to injury to or destruction of tangible property (other than the Work itself), but only to the extent caused by the negligent acts or omissions of the Contractor, a Subcontractor, anyone directly or indirectly employed by them, or anyone for whose acts they may be liable, regardless of whether or not such claim, damage, loss, or expense is caused in part by a party indemnified hereunder. Such obligation shall not be construed to negate, abridge, or reduce other rights or obligations of indemnity that would otherwise exist as to a party or person described in this Section E.

1.7 Work Restrictions

A. Work Restrictions, General: Comply with restrictions on construction operations.
   1. Comply with limitations on use of public streets and with other requirements of authorities having jurisdiction.
   2. On-Site Work Hours: No limit to working hours. Contractor shall take advantage of 24 hour working schedule, Monday through Sunday, unless otherwise indicated.
   3. Hydrodemolition shall be performed only during the hours of 7:30 am to 3:30 pm.
   4. City Holidays: If work is required, the Contractor should coordinate with the Owner 72 hours in advanced.
   5. Existing Utility Interruptions: Do not interrupt utilities serving facilities occupied by Owner or others unless permitted under the following conditions and then only after providing temporary utility services according to requirements indicated:
      a. Notify Owner not less than five days in advance of proposed utility interruptions.
      b. Obtain Owner's written permission before proceeding with utility interruptions.
6. Use of tobacco, alcohol, electronic vapes, controlled substances, and illicit drugs are prohibited on project site and surrounding areas. Anyone found with alcohol, controlled substances or illicit drugs on their person, or in their vehicle, on site or in the surrounding areas will be removed from site. Work will be suspended at the Contractors expense until a meeting can be scheduled between Owner and Contractor. At this time, the Owner reserves the right to terminate any and all contracts with Contractor.
7. Employee Identification: Provide identification tags for Contractor personnel working on Project site. Require personnel to use identification tags at all times. Personnel shall have their companies name or logo on the outmost piece of clothing or hard hat. Personnel shall not wear any garment showing the name of a company other than the one they are employed.

1.8 Required Licenses

A. Contractor or Sub-contractor must have the required licenses and certifications to perform the Work.

PART 2 - PRODUCTS (Not Used)

PART 3 - EXECUTION (Not Used)

END OF SECTION

SECTION 01 22 00 – MEASUREMENT AND PAYMENT PROCEDURES

PART 1 - GENERAL

1.1 General

A. Measurement: Notify Owner, or Owner's Designee, at least 48-hours prior to the time at which necessary measurements must be taken. Notification must be in advance of obscuring pay item. Do not proceed until such measurements have been taken in the presence of the Owner or Owner's Designee.

1.2 List of Payment Items

A. The payment items listed below identify the major components of work identified and specified in the Contract Documents. Work that is not specifically called out within an individual payment item but is inherently required to complete the Work shall be considered as a part of that payment item.

B. Specification Sections are referenced below for the convenience of the Contractor only and are not intended to identify the sole or complete location of specified work required under the payment item.

1.3 List of Lump Sum Base Bid Items

A. Lump Sum Base Bid Item 1 – Base Bid Items as outlined in the Bid Form.

B. Measurement: As measured by the Owner, or Owner's Designee, pro-rated with the Contractor's progress of work at the Project Site.

1.4 List of Base Bid Unit Price Items

A. List of Base Bid Unit Price Items - Base Bid Unit Price Items as outlined in the Bid Form.

B. Measurement: As measured by the Owner, or Owner's Designee, by completed unit of measure.

C. Payment: Will be paid per unit of measure listed in Base Bid Unit Price Item on Bid Form.

1.5 List of Base Bid Allowance Items

A. List of Base Bid Allowance Items - Base Bid Allowance Items as outlined in the Bid Form.

B. Measurement: Prior to invoicing for allowances, backup documentation must be submitted indicating actual cost of allowance item and approved by Owner.

C. Payment: Will be paid per the backup documentation provided and approved by Owner.

1.6 Alternate Bid Items

A. List of Alternate Bid Items - Alternate Bid Items as outlined in the Bid Form.

B. Measurement: As measured by the Owner, or Owner's Designee, pro-rated with the Contractor's progress of work at the Project Site.

C. Payment: Will be paid per unit of measure listed in Alternate Bid Items on Bid Form.

PART 2 - PRODUCTS (Not Used)

PART 3 - EXECUTION (Not Used)

END OF SECTION

SECTION 01 31 00 - PROJECT MANAGEMENT AND COORDINATION

PART 1 – GENERAL

1.1 Summary

A. Section includes administrative provisions for coordinating construction operations on Project including, but not limited to, the following:
   1. General coordination procedures.
   2. Requests for Information (RFIs)
   3. Project meetings.

B. Related Sections:
   1. Section 01 71 13 "Mobilization."

1.2 Definitions

A. RFI: Request of Owner, or Owner's designee, seeking clarification or interpretation of the Contract Documents.

1.3 General Coordination Procedures

A. Coordination: Coordinate construction operations included in multiple sections of the Specifications and Drawings to ensure efficient and orderly installation of each part of the Work.
   1. Coordinate with Owner's Personnel or Owner's sub-contractors as required. Include these individuals in the weekly project meetings and distribution of applicable information.
   2. Coordinate and sequence Work to limit the duration of disturbance to project site.
   3. Coordinate Work to limit periods of inactivity after Mobilization.

B. Schedule construction operations in sequence required to obtain the best results where installation of one part of the Work depends on installation of other components, before or after its own installation.

C. Coordinate installation of different components to ensure maximum performance and accessibility for required maintenance, service, and repair.

D. Make adequate provisions to accommodate items scheduled for installation at a later date.

E. Contractor, at a minimum, shall hold weekly project meetings inclusive of the Owner and Owner's Designee. Contractor shall coordinate for the appropriate project team members to attend, document meeting with meeting minutes (distributed within 24 hours of meeting), and supply an updated Schedule and 3 Week Look Ahead. Location of meeting to be coordinated with Owner.

1.4 REQUESTS FOR INFORMATION (RFIs)

A. General: Immediately on discovery of the need for additional information or interpretation of the Contract Documents, Contractor shall prepare and electronically submit a RFI in the form specified or agreed upon.

B. Owner, or Owner's Designee, will return RFIs submitted directly to the Owner, or their Designee, by other entities controlled by Contractor with no response.

C. Coordinate and submit RFIs in a prompt manner as to avoid delays in Contractor's work or work of sub-contractors.

D. Content of the RFI: Include a detailed, legible description of the request needing additional information or interpretation, and the following:
   1. Project name
   2. Project number
   3. Date Submitted
   4. Name of Contractor, Name of Owner, Name of Engineer.
   5. RFI number, numbered sequentially.
   6. RFI Title (Title should clearly represent the topic of the RFI
   7. RFI Request (Request should clearly identify the additional information required).
   8. Specification Section number, title and related paragraphs, as appropriate.
   9. Drawing number and detail references, as appropriate.
   10. Field dimensions and condition, as appropriate.
   11. Contractor's suggested resolution. If Contractor's suggested resolution impacts the Contract Time or the Contract Sum, Contractor shall state impact in the RFI.
   12. Contractor's signature

E. Contractor shall give Owner written notification of impacts to Time or Contract Sum within 2 days of RFI response if necessary. Or prior to expenditure of additional funds requiring reimbursement.

F. RFI Log: When RFI's are submitted to the Owner, or Owners Designee, prepare, maintain, and submit a printed log of RFIs organized by the RFI number. Submit log weekly for review. Log shall include the following:
   1. Project name.
   2. Name and address of Contractor
   3. Name and address of Owner.
   4. RFI number including RFIs that were returned without action or withdrawn.
   5. RFI Status (Open, Closed, Void)
   6. RFI Titles
   7. Date the RFI was submitted.

8. Date Owner or its designee's response was received
9. Days RFI response is overdue
10. Cost impact (Time or Contract sum)

G. On receipt of Owner or its designee's action, update the RFI log and immediately distribute the RFI response to affected parties. Review response and notify Owner or its designee within 2 days if Contractor disagrees with response.

1.5 Project Meetings

A. Project Kick-Off Meeting: Contractor shall schedule and conduct a Project Kick-Off meeting within 2 weeks of being awarded the Project, at a time convenient to Owner and Owner's Designee.
   1. Attendees: Authorized representatives of Owner, Owner's Designee, Contractor, and their Sub-contractors.
   2. Agenda: Discuss items of significance that could affect progress, including the following:
      a. Project Schedule
      b. Permitting schedule Risk Review
      c. Phasing Plans
      d. Designation of key personnel and their duties
      e. Communications protocols
      f. Procedures for processing field decisions and Change Orders
      g. Procedures for RFIs
      h. Procedures for testing and inspecting
      i. Procedures for processing Applications for Payment
      j. Distribution of the Contract Documents
      k. Submittal procedures
      l. Contractors Submittal Log
      m. Contractors Log of Anticipated Tests and Inspections for use during construction
      n. Preparation of record documents
      o. Use of the premises
      p. Work restrictions
      q. Working hours
      r. Responsibility for temporary facilities and controls
      s. Construction waste management and recycling
      t. Parking availability
      u. Equipment deliveries and priorities
      v. Health and safety
      w. First aid
      x. Security
      y. Progress cleaning
   3. Minutes: Contractor shall record and distribute meeting minutes with sign-In sheet, schedules, and other attachments discussed during meeting.

B. Pre-Construction Meeting: Contractor shall schedule and conduct a Pre-Construction Meeting 5 days before Mobilization to review responsibilities and personnel assignments, at a time convenient to Owner and its designee.
   1. Attendees: Authorized representatives of Owner, Owner's Designee, Contractor, Contractor's superintendent and foreman, major sub-contractors, and other concerned parties shall attend the conference.
      a. Participants at the conference shall be familiar with the project and authorized to conclude matters relating to the Work.
   2. Agenda: Discuss items of significance that could affect progress, including the following:
      a. Project Schedule / 3 week look ahead
      b. Phasing and mobilization
      c. Designation of key personnel and their duties.
      d. Lines of communications.
      e. Project directory with email and phone numbers.
      f. Procedures for processing field decisions and Change Orders.
      g. Procedures for RFIs / Review any current RFI's
      h. Procedures for testing and inspecting.
      i. Contractors Log of Anticipated Tests and Inspections for use during construction.
      j. Use of the premises.
      k. Work restrictions
      l. Working hours.
      m. Temporary facilities.
      n. Construction waste management and recycling.
      o. Parking availability and site access.
      p. Equipment deliveries and priorities.
      q. Health and safety plan and requirements
      r. First aid.
      s. Security.
      t. Progress cleaning.
   3. Minutes: Contractor shall record and distribute meeting minutes with sign-In sheet, schedules, and other attachments discussed during meeting.

C. Weekly Progress Meetings - CONTRACTOR shall schedule and conduct weekly meetings and/or conferences at a RIPTA Office or the Project Site.
   1. Attendees: Contractor to inform participants, and any additional individuals whose presence is required, of date and time of each meeting. Notify Owner, Owner's Designee, other Contractor and Sub-contractors of scheduled meeting dates and times. Contractor's attendance is mandatory.
   2. Agenda: Prepare the meeting agenda. Distribute the agenda to all invited attendees. The meeting agenda should include the following at a minimum:
      a. Health and safety requirements / Issues.
      b. Project Schedule / 3 week Look-Ahead / Delays.
      c. Submittal Reviews

d. Submitted or Upcoming RFI's.
e. Submitted or upcoming Change Orders
f. Risk Mitigation Log
g. General Discussion Items

4. Minutes: Contractor will record significant discussions and agreements achieved during the meeting. Contractor shall record and distribute meeting minutes with sign-In sheet, schedules, submittal log, RFI log and other attachments discussed during meeting.

D. Project Closeout Conference: Contractor shall schedule and conduct a project closeout conference to review requirements and responsibilities related to Project closeout, at a time convenient to Owner and its designee, but no later than 10 days prior to the scheduled date of Substantial Completion. (Substantial Completion occurs when the project, or a portion of the project, is fit for its intended use and the Owner can occupy and use the property)

1. Attendees: Authorized representatives of Owner, Owner's Designee, Contractor, and their Sub-contractors.
2. Agenda: Discuss items of significance that could affect or delay project closeout, including the following:
   a. Preparation of record documents
   b. Procedures required for Substantial Completion, Final Inspection, and Closeout
   c. Submittal of written warranties
   d. Lien waiver requirements
   e. Requirements for preparing operations and maintenance data
   f. Preparation of Contractor's punch list
   g. Procedures for processing Applications for Payment at Substantial Completion and for final payment
   h. Responsibility for removing temporary facilities and controls
3. Minutes: Contractor shall record and distribute meeting minutes with sign-In sheet, schedules, and other attachments discussed during meeting.

E. Safety Meetings: At a minimum, The Contractor shall schedule and administer a weekly Safety Meetings, or if requested by the Owner or Owner's Designee.

1. Attendees: Owner and Owner's Designee, each Contractor including all onsite employees, Sub-contractors including all onsite employees, suppliers, and other entity concerned with current progress or involved in planning, coordination, or performance of future activities shall be represented at these meetings. All participants at the meetings shall be familiar with OSHA regulations relating to the Work.
2. Agenda: Review topics of significance that could affect safety. Include topics for discussion as appropriate to the phase of the Project. Review present and future concerns, including the following:
   a. Proposed Work activities for that week and/or day.
   b. Current hazards and risks onsite.
   c. Anticipated weather conditions.
   d. Anticipated changes to site conditions.

e. "Tool Box Talk" with topic that relates to on site activities.

F. Daily Arrival Meeting: All Contractor employees, visitors, vendors, and sub-contractors to the Project Site shall sign in with the Contractor before entering the property and sign the visitor log book. Log book should contain the following for each signee:
   1. Legal Name
   2. Company Name
   3. Phone Number
   4. Time In / Time Out

   Contractor shall maintain the visitor log book throughout the duration of the Project. The site-specific Health and Safety Plan (HASP) should be available to all visitors and be kept with visitor log book.

.

PART 2 - PRODUCTS (Not Used)

PART 3 - EXECUTION (Not Used)

END OF SECTION

SECTION 01 33 23 - SUBMITTAL PROCEDURES

PART 1 – GENERAL

1.1 Summary

A. Section includes requirements for the Submittal Log, and administrative procedural requirements for submitting Shop Drawings, Product Data, Samples, and other Submittals. ALL PRODUCTS INCORPORATED INTO THE CONSTRUCTION OF THIS PROJECT ARE REQUIRED TO BE SUBMITTED FOR APPROVAL REGARDLESS IF IT IS, OR IS NOT, INCLUDED IN THE SPECIFICATIONS.

B. Comply with requirements specified in other Specification Sections, Contract Documents, and the Rhode Island Department of Transportation Standard Specifications for Road and Bridge Construction 2004 EDITION (AMENDED MARCH 2018).

1.2 Definitions

A. Submittals: Written, graphic information, and/or physical samples that require the Owner's and their designee's responsive action prior to fabrication, procurement, and/or installation of item. Submittals are indicated in individual Specification Sections as "Submittals."

B. Informational Submittals: Written and graphic information and physical samples that do not require the Owner's and its designee responsive action. Submittals may be rejected for not complying with requirements. Informational submittals are those submittals not indicated in individual Specification Sections as "Submittals."

C. File Transfer Protocol (FTP): A file sharing program such as ProCore, or an approved equal, shall be used to enable transfer of files to and from the Owner and Contractor.

D. Portable Document Format (PDF): A versatile file format that gives people an easy, reliable way to present and exchange documents - regardless of the software, hardware, or operating systems being used by anyone who views the document..

1.3 Submittals

A. Submittal Log: Contractor to submit a log of submittals, arranged in chronological order by specification section. Include the following information in the Submittal Log:
   1. Status.
   2. Product Name
   3. Specification Number
   4. Date Submitted for Review
   5. Response required date
   6. Days the response is overdue
   7. Date Submittal was Returned

8. Lead Time of Product
9. Order Release Date
10. Ship Date
11. Tracking Numbers
12. Arrival Date

Submit Submittal Log for review concurrently with Kick-Off Meeting. Mark those submittals requiring immediate attention to maintain orderly progress of the Work and those required early due to long lead time for manufacture or fabrication. ALL PRODUCTS INCORPORATED INTO THE CONSTRUCTION OF THIS PROJECT ARE REQUIRED TO BE SUBMITTED FOR APPROVAL REGARDLESS IF IT IS, OR IS NOT, INCLUDED IN THE SPECIFICATIONS.

B. Project Administrative Submittals: Submit the following information for approval:
    1. Project Schedule – to be provided at Kick-Off Meeting
    2. Site Phasing Plan – to be provided at Kick-Off Meeting
    3. Contractor and Sub-contractor Licenses – to be provided at Kick-Off Meeting
    4. Health and Safety Plan – to be provided at Kick-Off Meeting
    5. List of Sub-contractors – to be provided at Kick-Off Meeting
    6. Quality Control Plan – to be provided at Pre-Construction Meeting
    7. Submittal Log – to be provided at Kick-Off Meeting.
    8. Pre-Construction Photos – to be submitted prior to Mobilization
    9. As-Built drawings – to be provided during Project Closeout
    10. Operation and Maintenance Manual/Owner's Manual – to be provided during Project Closeout

C. Coordination: Coordinate preparation and processing of submittals with sequence of construction activities.
    1. Coordinate each submittal with fabrication, purchasing, testing, delivery, other submittals, and related activities that require sequential activity.
    2. Submit all submittal items required for each Specification Section concurrently unless partial submittals for portions of the Work are indicated on reviewed Submittal Log.
    3. Submit Submittals and Informational Submittals required by the same Specification Section as separate packages under separate transmittals.
    4. Coordinate transmittal of different types of submittals for related parts of the Work so processing will not be delayed because of need to review submittals concurrently for coordination.
    5. Owner, or Owner's Designee, reserves the right to withhold action on a submittal requiring coordination with other submittals until related submittals are received.
    6. Processing Time: Allow time for submittal review, including time for resubmittals, as follows.
        a. Time for review shall commence on Owner's receipt of submittal. No extension of the Contract Time will be authorized because of failure to transmit submittals far enough in advance of the Work to permit processing, including resubmittals.

b. Initial Review: Allow 10 days for initial review of each submittal. Allow additional time if coordination with subsequent submittals is required. Owner or its designee will advise Contractor when a submittal being processed must be delayed for coordination.

7. Intermediate Review: If an intermediate submittal is necessary, process it in same manner as initial submittal.
8. Resubmittal Review: Allow 10 days for review of each resubmittal.

D. Electronic Submittals: Submittals shall only be transmitted digitally unless submittal is a physical sample or mockup. Identify and incorporate information in each electronic submittal file as follows:
   1. Assemble complete submittal package into a single indexed file incorporating submittal requirements of a single Specification Section and transmittal form.
      a. Name file with project identifier, submittal number, revision number, and submittal title.
      b. File name shall use project identifier and Specification Section number followed by a decimal point and then a sequential number (e.g., PARAFL-01 33 23.01).
      c. Resubmittals shall include a suffix "R#" after another decimal point (e.g., PARAFL-01 33 23.01.R1).
      d. Provide means for insertion to permanently record Contractor's review and approval markings, and action taken by Owner or its designee.
      e. Transmittal Form for Electronic Submittals: Use consistent electronic form acceptable to Owner.

E. Resubmittals: Make resubmittals in same form and number of copies as initial submittal. Note date and content of previous submittal. Note date and content of revision in label or title block and clearly indicate extent of revision throughout submittal.
   1. The Contractor shall resubmit the relative plans, documents, ect. until they are marked with approval notation from the Owner's action stamp. .
   2. After a total of two (2) submissions of the same section, the Contractor shall incur the costs of each subsequent submittal at $1,200.0 each. The Contractor will continue incurring said cost until marked with the Owner's action stamp.
      a. Should it be the Owner's opinion that the Contractor has re-numbered submittal documents, or conducted similar practices to avoid this fee, the cost incurred shall become $2,400.00 for the duration of the project for each resubmittal meeting Section 01 33 23(E)(1)(2) thereafter.

F. Distribution: Contractor to furnish copies of final submittals to manufacturers, sub-contractors, suppliers, fabricators, installers, authorities having jurisdiction, and others as necessary for performance of construction activities. Show distribution on transmittal forms.

G. Use for Construction: Retain complete copies of submittals on the project site or make available to field personnel digitally. Use only approved submittals that are marked with approval notation from Owner's action stamp.

PART 2 – PRODUCTS

2.1 Submittal Procedures

A. General Submittal Procedure Requirements: Prepare and submit submittals required by individual Specification Sections. Types of submittals are indicated in individual Specification Sections. ALL PRODUCTS INCORPORATED INTO THE CONSTRUCTION OF THIS PROJECT ARE REQUIRED TO BE SUBMITTED FOR APPROVAL REGARDLESS IF IT IS, OR IS NOT, INCLUDED IN THE SPECIFICATIONS. Submit electronic submittals as PDF electronic files via ProCore, or approved equal, furnished and maintained by the Contractor, and giving access to all project team members. Owner, will return annotated file. Contractor to retain one copy of file as an electronic project record document file for closeout.

B. Certificates and Certifications Submittals: Provide a statement that includes signature of entity responsible for preparing certification. Certificates and certifications shall be signed by an officer or other individual authorized to sign documents on behalf of that entity. Provide a digital signature with digital certificate on electronically submitted certificates and certifications where indicated. Provide a notarized statement on original paper copy certificates and certifications where indicated.

C. Product Data: Collect information into a single submittal for each element of construction and type of product or equipment. If information must be specially prepared for submittal because standard published data are not suitable for use. Mark each copy of each submittal to show which products and options are applicable. Include the following information, as applicable:
   1. Manufacturer's catalog cuts.
   2. Manufacturer's product specifications.
   3. Standard color charts.
      a. Supply hard copy of manufactures color chart for selection. Include a photo of color chart in digital submittal.
   4. Statement of compliance with specified referenced standards.
   5. Testing by recognized testing agency.
   6. Application of testing agency labels and seals.
   7. Notation of coordination requirements.
   8. Availability and delivery time information.
   9. For equipment, include the following in addition to the above, as applicable:
      a. Wiring diagrams showing factory-installed wiring.
      b. Printed performance curves.
      c. Operational range diagrams.

d. Clearances required to other construction, if not indicated on accompanying Shop Drawings.
e. Submit Product Data before or concurrent with Samples.

D. Shop Drawings: Prepare project-specific information, drawn accurately to scale. Do not base Shop Drawings on reproductions of the Contract Documents or standard printed data, unless submittal based on Owner's digital data drawing files is otherwise permitted.
1. Preparation: Fully illustrate requirements in the Contract Documents. Include the following information, as applicable:
a. Identification of products.
b. Schedules.
c. Compliance with specified standards.
d. Notation of coordination requirements.
e. Notation of dimensions established by field measurement.
f. Relationship and attachment to adjoining construction clearly indicated.
g. Seal and signature of professional engineer if specified.
2. Submit Shop Drawings in the following format:
a. PDF electronic file via ProCore or approved equal.
b. Samples for Verification: Submit full-size units or Samples of size indicated, prepared from same material to be used for the Work, cured and finished in manner specified, and physically identical with material or product proposed for use, and that show full range of color and texture variations expected. Include a photo of physical samples or mockups in digital submittal for record. Samples include, but are not limited to, the following:
1. Partial sections of manufactured or fabricated components
2. Small cuts or containers of materials.
3. Complete units of repetitively used materials.
4. Swatches showing color, texture, and pattern; color range sets; and components used for independent testing and inspection.
5. Number of Samples: Submit two sets of Samples. Owner will retain both Sample sets.

E. Test and Inspection Reports and Log of Tests and Inspections Submittals: Comply with required testing specified in the Contract Documents. Contractor's Testing agency shall copy Owner and Owner's Designee on the original distribution of results. Contractor shall compile all final test reports and formally submit for closeout.

F. Qualification Data: Prepare written information that demonstrates capabilities and experience of firm or person. Include copies of all licenses and certifications for each employee working on site.
1. Contractor or Sub-contractor must hold all licensee required to perform the work

G. Installer Certificates: Submit written statements on manufacturer's letterhead certifying that Installer complies with requirements in the Contract Documents and, where required, is

authorized by manufacturer for this specific project.

H. Manufacturer Certificates: Submit written statements on manufacturer's letterhead certifying that manufacturer complies with requirements in the Contract Documents. Include evidence of manufacturing experience where required.

I. Product Certificates: Submit written statements on manufacturer's letterhead certifying that product complies with requirements in the Contract Documents.

J. Material Certificates: Submit written statements on manufacturer's letterhead certifying that material complies with requirements in the Contract Documents.

K. Material Test Reports: Submit reports written by a qualified testing agency, on testing agency's standard form, indicating and interpreting test results of material for compliance with requirements in the Contract Documents. Contractor's Testing agency shall copy Owner and Owner's Designee on the original distribution. Contractor shall compile all final test reports and formally submit for closeout. Reports include, but is not limited to:
   1. Environmental testing for all imported materials (loam, fill, gravel borrow, etc.)
   2. Environmental testing for all exported materials
   3. Concrete testing including: air content, slump, concrete temperature, and compression test specimens.
      a. Compressive-Strength Tests at 7 days, 14 days and 28 days. (include 3 day breaks as required to accelerate schedule)
   4. Product Test Reports: Submit written reports indicating that current product produced by manufacturer complies with requirements in the Contract Documents. Base reports on evaluation of tests performed by manufacturer and witnessed by a qualified testing agency, or on comprehensive tests performed by a qualified testing agency.

L. Research Reports: Submit written evidence, from a model code organization acceptable to authorities having jurisdiction, that product complies with building code in effect for Project. Include the following information:
   1. Name of evaluation organization.
   2. Date of evaluation.
   3. Time period when report is in effect.
   4. Product and manufacturers' names.
   5. Description of product.
   6. Test procedures and results.
   7. Limitations of use.

M. Pre-Construction Test Reports: Submit reports written by a qualified testing agency, on testing agency's standard form, indicating and interpreting results of tests performed before installation of product, for compliance with performance requirements in the Contract Documents.

N. Field Test Reports: Submit written reports indicating and interpreting results of field tests performed either during installation of product or after product is installed in its final location, for compliance with requirements in the Contract Documents.

O. Design Data: Prepare and submit written and graphic information, including, but not limited to, performance and design criteria, list of applicable codes and regulations, and calculations. Include list of assumptions and other performance and design criteria and a summary of loads. Include load diagrams if applicable. Provide name and version of software, if any, used for calculations. Include page numbers.

PART 3 - EXECUTION

3.1 Owner's Action

A. Submittals: Owner or its designee will review each submittal, make marks to indicate corrections or revisions required, and return it. Owner or its designee will stamp each submittal with an action stamp and will mark stamp appropriately to indicate action, as follows:
   1. Furnish As Submitted: No response is required by the Contractor.
   2. Furnish as Noted: Contractor shall review Owner's annotations and Furnish accordingly.
   3. Rejected: Contractor shall resubmit until Owner finds submittal satisfactory.

B. Partial submittals prepared for a portion of the Work will be reviewed when use of partial submittals has received prior approval from Owner.

C. Incomplete submittals are unacceptable, will be considered nonresponsive, and will be returned for resubmittal without review.

D. Submittals not required by the Contract Documents may be returned by the Owner without action.

E. The Owner has the right to approve or reject any submittals and oversee critical project concerns.

END OF SECTION

SECTION 01 40 00 - QUALITY REQUIREMENTS

PART 1 – GENERAL

1.1 Summary

A. Section includes administrative and procedural requirements for quality assurance and quality control.

B. Testing and inspecting services are required to verify compliance with requirements specified or indicated. These services do not relieve Contractor of responsibility for compliance with the Contract Document requirements.
   1. Specific quality-assurance and -control requirements for individual construction activities are specified in the sections that specify those activities. Requirements in those sections may also cover production of standard products.
   2. Specified tests, inspections, and related actions do not limit Contractor's other quality-assurance and control procedures that facilitate compliance with the Contract Document requirements.
   3. Requirements for Contractor to provide quality-assurance and -control services required by Owner or Owner's designee, or authorities having jurisdiction are not limited by provisions of this section.
   4. Specific test and inspection requirements are not specified in this Section.

1.2 References

A. Construction Documents and Rhode Island Department of Transportation Standard Specifications for Road and Bridge Construction 2004 EDITION (AMENDED MARCH 2018)

1.3 Definitions

A. Quality-Assurance Services: Activities, actions, and procedures performed before and during execution of the Work to guard against defects and deficiencies and substantiate that proposed construction will comply with requirements.

B. Quality-Control Services: Tests, inspections, procedures, and related actions during and after execution of the Work to evaluate that actual products incorporated into the Work and completed construction comply with requirements. Services do not include contract enforcement activities performed by Owner or Owner's Designee.

C. Preconstruction Testing: Tests and inspections performed specifically for a project before products and materials are incorporated into the Work, to verify performance or compliance with specified criteria.

D. Product Testing: Tests and inspections that are performed by a Nationally Recognized Testing Laboratory, a National Voluntary Laboratory Accreditation Program, or a testing agency qualified to conduct product testing and acceptable to authorities having jurisdiction, to establish product performance and compliance with specified requirements.

E. Field Quality-Control Testing: Tests and inspections that are performed on-site for installation of the Work and for completed Work.

F. Testing Agency: An entity engaged to perform specific tests, inspections, or both. Testing laboratory shall mean the same as testing agency.

G. Installer/Applicator/Erector: Contractor or another entity engaged by Contractor as an employee, Sub-contractor, or Sub-subcontractor, to perform a particular construction operation, including installation, erection, application, and similar operations.
   1. Use of trade-specific terminology in referring to a trade or entity does not require that certain construction activities be performed by accredited or unionized individuals, or that requirements specified apply exclusively to specific trade(s).

H. Experienced: When used with an entity or individual, "experienced" means having successfully completed a minimum of five previous projects similar in nature, size, and extent to this Project; being familiar with special requirements indicated; and having complied with requirements of authorities having jurisdiction.

1.4 Conflicting Requirements

A. Referenced Standards: If compliance with two or more standards is specified and the standards establish different or conflicting requirements for minimum quantities or quality levels, comply with the most stringent requirement. Refer conflicting requirements that are different, but apparently equal, to Owner or Owner's Designee for a decision before proceeding.

B. Minimum Quantity or Quality Levels: The quantity or quality level shown or specified shall be the minimum provided or performed. The actual installation may comply exactly with the minimum quantity or quality specified, or it may exceed the minimum within reasonable limits. To comply with these requirements, indicated numeric values are minimum or maximum, as appropriate, for the context of requirements. Refer uncertainties to Owner or Owner's Designee for a decision before proceeding.

1.5 Submittals

A. Contractor's Quality-Control Plan: For quality-assurance and quality-control activities and responsibilities.

B. Testing Agency Qualifications: For testing agencies specified in "Quality Assurance" Article to demonstrate their capabilities and experience. Include proof of qualifications in the form of a recent report on the inspection of the testing agency by a recognized authority.

C. Log of Tests and Inspections - Prepare in digital form for approval and include the following:
   1. Specification Section number and title.
   2. Entity responsible for performing tests and inspections.
   3. Description of test and inspection.
   4. Identification of applicable standards.
   5. Identification of test and inspection methods.
   6. Number of tests and inspections required.
   7. Time schedule or time span for tests and inspections.
   8. Requirements for obtaining samples.
   9. Results indicating Pass or Fail when received.

1.6 Contractor's Quality-Control Plan

A. Quality-Control Plan, General: Submit quality-control plan not less than five days prior to Project Kickoff Meeting. Submit in format acceptable to Owner or Owner's Designee. Identify personnel, procedures, controls, instructions, tests, records, and forms to be used to carry out Contractor's quality-assurance and quality-control responsibilities.

B. Quality-Control Personnel Qualifications: Engage qualified full-time personnel trained and experienced in managing and executing quality-assurance and quality-control procedures similar in nature and extent to those required for the Project. Project quality-control manager may also serve as project superintendent.

C. Submittal Procedure: Describe procedures for ensuring compliance with requirements through review and management of submittal process. Indicate qualifications of personnel responsible for submittal preparation and review.

D. Testing and Inspection: In quality-control plan, include a comprehensive log of Work requiring testing or inspection prior to acceptance by the Owner, including the following:
   1. Contractor-performed tests and inspections including subcontractor-performed tests and inspections. Required tests and inspections, and Contractor-elected tests and inspections, include but are not limited to:
      a. Pre-commissioning test reports.
      b. Special inspections required by authorities having jurisdiction and indicated on the "Statement of Special Inspections."
      c. Owner-performed tests and inspections indicated in the Contract Documents.

E. Continuous Inspection of Workmanship: Describe process for continuous inspection during construction to identify and correct deficiencies in workmanship in addition to testing and inspection specified. Indicate types of corrective actions to be required to bring work into

compliance with standards of workmanship established by Contract Document requirements and approved mockups.

F. Monitoring and Documentation: Maintain testing and inspection reports including log of approved and rejected results. Include work Owner or Owner's designee has indicated as nonconforming or defective. Indicate corrective actions taken to bring nonconforming work into compliance with requirements. Comply with requirements of authorities having jurisdiction.

1.7 Reports And Documents

A. Test and Inspection Reports: Prepare and submit certified written reports specified in other Sections. Include the following:
   1. Date of issue.
   2. Project title and number.
   3. Name, address, and telephone number of testing agency.
   4. Dates and locations of samples and tests or inspections.
   5. Names of individuals making tests and inspections.
   6. Description of the Work and test and inspection method.
   7. Identification of product and Specification Section.
   8. Complete test or inspection data.
   9. Test and inspection results and an interpretation of test results. (Pass / Fail)
   10. Record of temperature and weather conditions at time of sample taking and testing and inspecting.
   11. Comments or professional opinion on whether tested or inspected Work complies with the Contract Document requirements.
   12. Name and signature of laboratory inspector.
   13. Recommendations on re-testing and re-inspecting.
   14. Manufacturer's Technical Representative's Field Reports: Prepare written information documenting manufacturer's technical representative's tests and inspections specified in other Sections. Include the Name, address, and telephone number of technical representative making report.
   15. Distribution list for inspection results

B. Factory-Authorized Service Representative's Reports: Prepare written information documenting manufacturer's factory-authorized service representative's tests and inspections specified in other Sections. Include the following:
   1. Name, address, and telephone number of factory-authorized service representative making report.
   2. Statement that equipment complies with requirements.
   3. Results of operational and other tests and a statement of whether observed performance complies with requirements.

4. Statement whether conditions, products, and installation will affect warranty.
5. Other required items indicated in individual Specification Sections.
6. Permits, Licenses, and Certificates: For Owner's records, submit copies of permits, licenses, certifications, inspection reports, releases, jurisdictional settlements, notices, receipts for fee payments, judgments, correspondence, records, and similar documents, established for compliance with standards and regulations bearing on performance of the Work.

1.8 Quality Assurance

A. General: Qualifications paragraphs in this article establish the minimum qualification levels required; individual Specification Sections specify additional requirements.

B. Manufacturer Qualifications: A firm experienced in manufacturing products or systems similar to those indicated for this Work and with a record of successful in-service performance, as well as sufficient production capacity to produce required units.

C. Fabricator Qualifications: A firm experienced in producing products similar to those indicated for this Work and with a record of successful in-service performance, as well as sufficient production capacity to produce required units.

D. Installer Qualifications: A firm or individual experienced in installing, erecting, or assembling products that are similar in material, design, and extent to that indicated for this Work, whose work has resulted in construction with a record of successful in-service performance.

E. Professional Engineer Qualifications: A professional engineer who is legally licensed to practice in the State of Rhode Island jurisdiction where Project is located and who is experienced in providing engineering services of the kind indicated. Engineering services are defined as those performed for installations of the system, assembly, or product that are similar in material, design, and extent to those indicated for this Project.

F. Professional Land Surveyor Qualifications: A professional land surveyor who is legally qualified to perform topographic and property line surveys in the State of Rhode Island and who has sufficient experience providing record documents or other required services.

G. Specialists: Certain Specification Sections require that specific construction activities shall be performed by entities who are recognized experts in those operations. Specialists shall satisfy qualification requirements indicated and shall be engaged for the activities indicated.
   1. Requirements of authorities having jurisdiction shall supersede requirements for specialists.

H. Testing Agency Qualifications: Shall be an acceptable Testing Agencies recognized by a NRTL, an NVLAP, or an independent agency with the experience and capability to conduct

testing and inspecting indicated, as documented according to ASTM E 329; and with additional qualifications specified in individual sections; and, where required by authorities having jurisdiction, that is acceptable to authorities.

1. NRTL: A nationally recognized testing laboratory according to 29 CFR 1910.7.
2. NVLAP: A testing agency accredited according to NIST's National Voluntary Laboratory Accreditation Program.

I. Manufacturer's Technical Representative Qualifications: An authorized representative of manufacturer who is trained and approved by manufacturer to observe and inspect installation of manufacturer's products that are similar in material, design, and extent to those indicated for this Project.

J. Preconstruction Testing: Where testing agency is indicated to perform preconstruction testing for compliance with specified requirements for performance and test methods, comply with the following:

1. Contractor responsibilities include the following:
   a. Provide test specimens representative of proposed products and construction.
   b. Submit specimens in a timely manner with sufficient time for testing and analyzing results to prevent delaying the Work.
   c. Provide sizes and configurations of test assemblies, mockups, and laboratory mockups to adequately demonstrate capability of products to comply with performance requirements.
   d. Build site-assembled test assemblies and mockups using installers who will perform same tasks for project.
   e. Build laboratory mockups at testing facility using personnel, products, and methods of construction indicated for the completed Work.
   f. When testing is complete, remove test specimens, assemblies, mockups, and laboratory mockups; do not reuse products on Project.

2. Testing Agency Responsibilities: Submit a certified written report of each test, inspection, and similar quality-assurance service to Owner, with copy to Contractor. Interpret tests and inspections and state in each report whether tested and inspected work complies with or deviates from the Contract Documents.

1.9 Quality Control

A. Contractor Responsibilities: Tests and inspections are the Contractor's responsibility and shall be completed in accordance with the Contract Documents. Perform additional quality-control activities required to verify that the Work complies with requirements, whether specified or not.

1. Unless otherwise indicated, provide quality-control services specified and those required by authorities having jurisdiction. Perform quality-control services required of Contractor by authorities having jurisdiction, whether specified or not.

2. Where services are indicated as Contractor's responsibility, engage a qualified testing agency to perform these quality-control services. Contractor shall not employ same entity engaged by Owner, unless agreed to in writing by Owner.
3. Notify testing agencies at least 24 hours in advance of time when work that requires testing or inspecting will be performed.
4. Where quality-control services are indicated as Contractor's responsibility, submit a certified written report, of each quality-control service.
5. Testing and inspecting requested by Contractor and not required by the Contract Documents are Contractor's responsibility.
6. Submit additional copies of each written report directly to authorities having jurisdiction, when they so direct.

B. Re-testing/Re-inspecting: Regardless of whether original tests or inspections were Contractor's responsibility, provide quality-control services, including re-testing and re-inspecting, for construction that replaced Work that failed to comply with the Contract Documents at the contractor's expense.

C. Testing Agency Responsibilities: Cooperate with Owner, Owner's designee and Contractor in performance of duties. Provide qualified personnel to perform required tests and inspections.
   1. Notify Owner, Owner's designee and Contractor promptly of irregularities or when deficiencies are observed in the Work during performance of its services.
   2. Determine the location from which test samples will be taken and conducted.
   3. Conduct and interpret tests and inspections and state within each report whether tested and inspected work complies with or deviates from requirements.
   4. Submit a certified written report, in duplicate, of each test, inspection, and similar quality-control service through distribution list established at the beginning of the project. Owner and Owner's Designee shall be on distribution list.
   5. Do not release, revoke, alter, or increase the Contract Document requirements or approve or accept any portion of the Work.
   6. Do not perform any duties of Contractor.

D. Associated Services: All project members will cooperate with agencies performing required tests, inspections, and similar quality-control services, and provide reasonable auxiliary services as requested. Notify project team sufficiently in advance of operations to permit assignment of personnel. Provide the following:
   1. Access to the Work.
   2. Incidental labor and facilities necessary to facilitate tests and inspections.
   3. Adequate quantities of representative samples of materials that require testing and inspecting. Assist agency in obtaining samples.
   4. Facilities for storage and field curing of test samples.
   5. Delivery of samples to testing agencies.
   6. Preliminary design mix proposed for use for material mixes that require control by testing agency.

7. Security and protection for samples and for testing and inspecting equipment at Project site.

E. Coordination: Coordinate sequence of activities to accommodate required quality assurance and quality control services with a minimum of delay and to avoid necessity of removing and replacing construction to accommodate testing and inspecting.
   1. Schedule times for tests, inspections, obtaining samples, and similar activities.

F. Log of Tests and Inspections: Prepare a Log of tests, inspections, and similar quality control services required by the Contract Documents. Coordinate and submit concurrently with Contractor's construction schedule. Update as the Work progresses.
   1. Distribution: Distribute Log to Owner, Owner's designee, testing agencies, and each party involved in performance of portions of the Work where tests and inspections are required.

PART 2 - PRODUCTS (Not Used)

PART 3 – EXECUTION

3.1 Acceptable Testing Agencies

A. Testing shall be conducted in accordance with the local and state regulations and site specific permits.

3.2 Test And Inspection Log

A. Test and Inspection Log: Prepare a record of tests and inspections. Include the following:
   1. Specification Section number and title.
   2. Entity responsible for performing tests and inspections.
   3. Description of test and inspection.
   4. Identification of applicable standards.
   5. Identification of test and inspection methods.
   6. Number of tests and inspections required.
   7. Time schedule or time span for tests and inspections.
   8. Requirements for obtaining samples.
   9. Results indicating Pass or Fail when received.

B. Maintain log at Project site. Post changes and revisions as they occur. Provide access to test and inspection log for Owner's reference during normal working hours.

3.3 Repair And Protection

A. General: On completion of testing, inspecting, sample taking, and similar services, repair damaged construction and restore substrates and finishes.
   1. Provide materials and comply with installation requirements specified in other Specification Sections or matching existing substrates and finishes. Restore areas and extend restoration into adjoining areas.

B. Protect construction exposed by or for quality control service activities.

C. Repair and protection are Contractor's responsibility, regardless of the assignment of responsibility for quality control services.

END OF SECTION

SECTION 01 45 29 - TESTING LABORATORY SERVICES

PART 1 - GENERAL

1.1 Summary

A. This Section consists of requirements for the services of independent Testing Laboratories to perform specified testing of work and materials at the Project Site.

B. Related Sections:
   1. Section 01 40 00 "Quality Requirements"

1.2 Requirements

A. Testing shall be conducted in accordance with the local and state regulations and site specific permits.

B. Employment of Testing Laboratory shall in no way relieve Contractor of his obligation to perform work in accordance with Contract.

1.3 Submittals

A. Contractor shall submit for Owner's, or Owner's Designee, approval the name and qualifications of the independent Testing Laboratory prior to the commencement of work.

PART 2 - PRODUCTS (Not Used)

PART 3 - EXECUTION

3.1 Laboratory duties

A. Demonstrate expertise in providing services as specified in the Contract Documents.

B. Test the samples submitted by Contractor.

C. Cooperate with Owner, Owner's designee and the Contractor; provide qualified personnel promptly on notice. Perform specified inspections, sampling and testing of materials and methods of construction; ascertain compliance with requirements of Contract Documents.

D. The Testing Laboratory shall perform specified inspections, sampling, testing of materials and methods of construction as described in the Contract Documents.

E. The Testing Laboratory shall promptly notify the Owner or its designee of observed irregularities or deficiencies of work or products and shall perform additional testing as

required. The Testing Laboratory shall promptly submit reports electronically for each test per the pre-established distribution list. Each report shall include:

1. Date of issue.
2. Project title and number.
3. Name, address, and telephone number of testing agency.
4. Dates and locations of samples and tests or inspections.
5. Location of sample or test in the Project. Sample locations shall be shown on site plan sketch.
6. Names of individuals making tests and inspections.
7. Description of the Work and test and inspection method.
8. Identification of product and Specification Section.
9. Complete test or inspection data.
10. Test and inspection results and an interpretation of test results. (Pass / Fail)
11. Record of temperature and weather conditions at time of sample taking and testing and inspecting.
12. Comments or professional opinion on whether tested or inspected Work complies with the Contract Document requirements.
13. Name and signature of laboratory inspector.
14. Recommendations on re-testing and re-inspecting.
15. Manufacturer's Technical Representative's Field Reports: Prepare written information documenting manufacturer's technical representative's tests and inspections specified in other Sections. Include the Name, address, and telephone number of technical representative making report.
16. Distribution List for inspection results
17. Interpretation of test results.

F. The Testing Laboratory shall not be authorized to release, revoke, alter or enlarge upon any requirements of the Contract Documents, and Laboratory shall not approve or accept any portion of the Work that does not conform to these Specifications.

G. Laboratory may not assume any duties of the Contractor, and the Laboratory has no authority to stop work.

3.2 Contractor's responsibility

A. Cooperate with Laboratory personnel and provide access to work and facilitate the execution of the Laboratory’s required services.

B. Provide to Laboratory representative samples of materials to be tested in required quantities.

C. Furnish labor and facilities to provide access to work to be tested, to obtain and handle samples at the project site, and to facilitate inspections and tests.

D. Notify Laboratory sufficiently in advance of operations to allow for its assignment of personnel and schedule of tests.

E. Arrange with Laboratory, and pay for, any additional samples and testing required for Contractor's convenience.

F. Arrange with Laboratory, and pay for, any additional inspections, sampling and testing required when initial tests indicate that work does not comply with Contract Documents.

G. Arrange for and conduct any inspections required by State and/or local building, fire protection, safety, health or environmental officials.

H. Testing shall be provided by the Contractor; the Contractor will supply any laborers and equipment necessary for performing the testing at no additional cost. This work may include, but is not limited to, providing materials and samples and revising or repairing work to meet the intent of the plans and specifications. The Contractor is also responsible for any costs associated with conformance testing performed by an Independent Laboratory.

END OF SECTION

SECTION 01 50 00 - TEMPORARY FACILITIES, EQUIPMENT AND CONTROLS

PART 1 - GENERAL

1.1 Summary

A. Section includes requirements for temporary utilities, support facilities, and security.

1.2 Use Charges

A. General: Installation and removal of and use charges for temporary facilities shall be included in the Contract Sum unless otherwise indicated. Allow other entities to use temporary services and facilities without cost, including, but not limited to, Owner or Owner's designees, testing agencies, and authorities having jurisdiction.

B. Sewer Service: Pay sewer-service use charges for sewer usage by all entities for construction operations.

C. Water Service: Pay water-service use charges for water used by all entities for construction operations.

D. Electric Power Service: Pay electric-power-service use charges for electricity used by all entities for construction operations.

1.3 Submittals

A. For each temporary system, Contractor shall submit their plan for installing, utilizing, and removing the temporary system.
   1. Submittal shall include any required drawings, data sheets, and/or calculations for the system.

PART 2 - PRODUCTS

2.1 Materials

A. Portable Chain-Link Fencing: Minimum 2-inch (50-mm), 0.148-inch- (3.8-mm-) thick, galvanized-steel, chain-link fabric fencing; minimum 6 feet (1.8 m) high with galvanized-steel pipe posts; minimum 2-3/8-inch- (60-mm-) OD line posts and 2-7/8-inch- (73-mm-) OD corner and pull posts, with 1-5/8-inch- (42-mm-) OD top and bottom rails. Provide concrete or galvanized steel with sand bags for supporting posts.
   1. Temporary Fencing should be new or in "like new" condition.
   2. Temporary fencing shall be maintained daily.

B. Plastic Sheet: Polyethylene sheeting, 6-mil minimum thickness. Fire Retardant Plastic Sheeting only.

2.2 Temporary Facilities

A. Field Offices, General: Prefabricated or mobile units with serviceable finishes, temperature controls, and foundations adequate for normal loading.

B. Dumpsters for Construction Waste: Contractor shall provide waste-collection containers in sizes adequate to handle waste from construction operations for the duration of the project.
   1. Comply with requirements of authorities having jurisdiction.
   2. Dumpster shall be swapped out when full; and debris should never extend above the top of the dumpster.
   3. Dumpster shall be covered when active loading is not taking place.
   4. Location of dumpster shall be adequately protected to prevent pavement damage, damage to the surrounding area, and staining.

C. Restroom facilities: Contractor shall provide sanitary temporary Restroom facilities according to OSHA standards for construction sites.
   1. The contractor shall provide adequate washing facilities for employees engaged in the application of paints, coating, herbicides, or insecticides, or in other operations where contaminants may be harmful to the employees. Such facilities shall be in near proximity to the worksite and shall be so equipped as to enable employees to remove such substances.
   2. Contractors are not permitted to use RIPTA facilities.

2.3 Temporary Equipment

A. Fire Extinguishers: Contractor to provide portable, UL rated; fire extinguishers with correct class and extinguishing agent as required by locations and classes of fire exposures.

PART 3 - EXECUTION

3.1 Installation, General

A. Locate facilities where they will serve project adequately and result in minimum interference with performance of the Work. Relocate and modify facilities as required by progress of the Work. Indicate location of facilities on all phasing plans and coordinate with Owner.

B. Dispose of or remove all temporary materials at the completion of the project.

3.2 Temporary Utility Installation

A. Install temporary service or connect to existing services as necessary to complete the

construction operations.

1. Arrange with utility company, Owner, and existing users for time when service can be interrupted, if necessary, to make connections for temporary services.

B. Sanitary Facilities: Provide temporary toilets for use of construction personnel. Comply with requirements of authorities having jurisdiction for type, number, location, operation, and maintenance of fixtures and facilities. Service facilities to maintain sanitary conditions at all times.

3.3 Security And Protection of Existing Facilities:

A. Protection of Existing Facilities: Protect existing vegetation, equipment, structures, utilities, and other improvements at Project site and on adjacent properties, except those indicated to be removed or altered. Repair any damage to existing facilities.

B. Environmental Protection: Provide protection, operate temporary facilities, and conduct construction as required to comply with environmental regulations and that minimize possible air, waterway, and subsoil contamination or pollution or other undesirable effects.

C. Clean, repair, and restore adjoining properties and roads affected by erosion and sedimentation from Project Site during the course of Project. Remove erosion and sedimentation controls and restore and stabilize areas disturbed during removal.

D. Storm water Control: Comply with requirements of authorities having jurisdiction. Provide barriers in and around excavations and subgrade construction to prevent flooding by runoff of storm water from heavy rains.

E. Tree and Plant Protection: Comply with requirements specified in Construction Documents.

F. Pest Control: Engage pest-control service to recommend practices to minimize attraction and harboring of rodents, roaches, and other pests and to perform extermination and control procedures at regular intervals so project site will be free of pests and their residues at Substantial Completion. Perform control operations lawfully, using environmentally safe materials.

G. Site Enclosure Fence: Before construction operations begin, furnish and install site enclosure fence in a manner that will prevent people and animals from easily entering site except by entrance gates.

H. Barricades, warning signs, and lights: Comply with requirements of authorities having jurisdiction for erecting structurally adequate barricades, including warning signs and lighting.

I. Termination and Removal: Remove each temporary facility when need for its service has

ended or when it has been replaced by authorized use of a permanent facility. If necessary, complete Work that may have been delayed because of interference with temporary facility. Repair damaged Work, clean exposed surfaces, and replace construction that cannot be satisfactorily repaired.

1. Materials and facilities that constitute temporary facilities are property of Contractor. Owner reserves right to take possession of Project identification signs.
2. Remove temporary roads and paved areas not intended for or acceptable for integration into final product. Where area is intended for landscape development, remove soil and aggregate fill that do not comply with requirements for fill or subsoil. Remove materials contaminated with road oil, asphalt and other petrochemical compounds, and other substances that might impair growth of plant materials or lawns. Repair or replace street paving, curbs, and sidewalks at temporary entrances, as required by authorities having jurisdiction.
3. At Substantial Completion, repair, renovate, and clean permanent facilities used during construction period. Comply with final cleaning requirements specified in 01 77 00 "Closeout Procedures."

END OF SECTION

SECTION 01 71 13 – MOBILIZATION

PART 1 - GENERAL

1.1 Summary

A. This Section includes work necessary for the movement of personnel, equipment, and operating supplies to and from the project site.

1.2 Informational Submittals

A. Site-specific Health and Safety Plan (HASP).

1.3 Coordination

A. Contractor shall schedule and conduct a Pre-construction Meeting 5 days before Mobilization to review responsibilities and personnel assignments, at a time convenient to Owner and their Designee.

PART 2 - PRODUCTS (Not Used)

PART 3 - EXECUTION

1.1 Health and Safety

A. The Contractor shall prepare a site-specific HASP in accordance with 29 CFR Part 1926 and 29 CFR Part 1910.120: Hazardous Waste Operations and Emergency Response of the Occupational Safety and Health Administration (OSHA). A copy must be maintained on-site at all times and be available for examination by the Owner and its designee.
   1. Reference section 30 01 20 and include required documentation in HASP

B. The Contractor shall designate a field site Health and Safety Officer (HSO) who will be responsible for ensuring that the Contractor's employees and the Contractor comply with the HASP.

C. The Contractor is solely responsible for providing a safe work environment for its employees, agents, authorized personnel, Owner's personnel, authorized representatives, authorized consultants, visitors, and/or similar entities in accordance with all applicable federal, state and local laws and regulations during the completion of the Work. Specifically, requirements for worker protection, and safe handling and management of several categories of project site hazards must be assured for hazardous substances as defined under 40 CFR 260-270 under 29CFR 1910.120 (OSHA HAZWOPER).

D. When any support system is used that requires design by an engineer, copies of the design stamped by a Professional Engineer registered in the State of Rhode Island shall be submitted to the Owner or Owner's Designee.

E. The Contractor has full responsibility to comply with all provisions of the State of Rhode Island Public General Statutes concerning Occupational Safety and Health. Any fines levied against the Contractor for violations shall be the Contractor's responsibility.

F. Consultants, Contractors, Sub-contractors and all other workers shall follow the Owner's safety standards while working at the Project Site, including but not limited to:
   1. The Contractor shall lead a Project Activities/ Daily Safety Meeting prior to work each day.
   2. The daily safety meetings should include safety topics that are relevant to the work being conducted.
   3. The Owner shall be invited to all daily project safety briefings.
   4. A job hazard analysis (JHA) shall be prepared by Contractor daily, reviewed, and signed by consultants, contractors, sub-contractors, and all other workers. The JHA should include safety concerns that are relevant to the work being conducted.
   5. All visitors, including new employees, delivery personnel, consultants, contractors, sub-contractors and any other visitors shall review and abide by the conditions contained in the HASP.
   6. All visitors to the site must check in with the Contractor before entering the property and sign the visitor log book including date, time in, time out, name, and purpose for visit.
   7. Any Owner employee, consultant, contractor, sub-contractor and/or any other worker has the Stop Work Authority when they feel that there is the potential for a serious injury, impairment of health, adverse effect on safe operation of a process, or an adverse impact to the environment resulting from a condition or practice in the workplace.
   8. Any accident, incident or injury, including near misses must be reported to the Owner as soon as possible but no later than the same calendar day.
   9. Owner required safety documents shall be requested and obtained from the Owner.
   10. One copy of the Owner required safety documentation shall be kept on file with the Contractor. Owner-required safety documentation includes, but is not limited to, HASP, signed JHA's, and visitor log book. Another copy shall be forwarded to the Owner.

1.2 Protection

A. The Contractor shall assume full responsibility for the protection of all public or private buildings, structures, and utilities in the rights-of-way, including gas pipes, water pipes, hydrants, sewers, drains, electric and telephone cables, and any other improvements whether or not they are shown on the Drawings. The Contractor shall carefully support and protect all such structures and utilities from damage of every description and any such

damage thereto shall be repaired or otherwise made good by the Contractor, at their expense, in a manner acceptable to the Owner or Owner's Designee.

B. All open excavations shall be adequately safeguarded by providing temporary barricades, caution signs, lights and other means to prevent accidents to persons and damage to property. The Contractor shall, at the Contractor's own expense, provide suitable and safe bridges and other crossings for accommodating travel by pedestrians and workmen. The length or size of excavation will be controlled by the particular surrounding conditions, but shall always be confined to the limits prescribed by the Contract Documents and Owner, or Owners Designee.

END OF SECTION

SECTION 01 73 00 – EXECUTION

PART 1 - GENERAL

1.1 Summary

A. Section includes general administrative and procedural requirements governing execution of the Work including, but not limited to, the following:
   1. Construction layout.
   2. Field engineering and surveying.
   3. Installation of the Work.
   4. Progress cleaning.
   5. Starting and adjusting.
   6. Protection of installed construction.

B. Related Sections:
   1. Section 01 31 00 "Project Management and Coordination."
   2. Section 01 40 00 "Quality Requirements."
   3. Section 01 78 39 “Project Record Documents.”

1.2 Quality Assurance

A. Land Surveyor Qualifications: As defined in Section 01 40 00 “Quality Requirements.”

B. Professional Engineer Qualifications: As defined in Section 01 40 00 “Quality Requirements.”

PART 2 - PRODUCTS

1.1 Materials

A. General: Comply with requirements specified in other Specification Sections, Contract Documents, and the Rhode Island Department of Transportation Standard Specifications for Road and Bridge Construction 2004 EDITION (AMENDED MARCH 2018).

PART 3 - EXECUTION

3.1 Examination

A. Existing Conditions: The existence and location of underground and other utilities and construction indicated as existing are not guaranteed. Before beginning site work, investigate and verify the existence and location of underground utilities and other construction affecting the Work.

1. Before construction, verify the location and invert elevation at points of connection of sanitary sewer, storm sewer, and water-service piping; underground electrical services, and other utilities.
2. Furnish location data for work related to project that must be performed by public utilities serving project site. Coordinate with authorities having jurisdiction.

B. Field Measurements: Take field measurements as required to fit the Work properly. Recheck measurements before installing each product. Where portions of the Work are indicated to fit to other construction, verify dimensions of other construction by field measurements before fabrication. Coordinate fabrication schedule with construction progress to avoid delaying the Work.

C. Space Requirements: Verify space requirements and dimensions of items shown diagrammatically on Drawings.

D. Review of Contract Documents and Field Conditions: Immediately on discovery of the need for clarification of the Contract Documents caused by differing field conditions outside the control of Contractor, submit a request for information to Owner, or Owner's Designee, according to requirements in Section 01 31 00 "Project Management and Coordination."

3.2 Construction Layout

A. Verification: Before proceeding to lay out the Work, verify layout information shown on Drawings, in relation to the property survey and existing benchmarks. If discrepancies are discovered, notify Engineer and Owner, or Owner's Designee promptly.

B. Topography Verification: Contours shown on Drawings are approximate in some areas. Before proceeding to lay out Work, verify topography information shown on Drawings. If any discrepancies are discovered, notify Engineer and Owner, or Owner's Designee promptly.

C. General: Engage a professional Land Surveyor to lay out the Work using accepted surveying practices.
   1. Establish benchmarks and control points to set lines and levels at each story of construction and elsewhere as needed to locate each element of Work.
   2. Establish the Limits of Disturbance.
   3. Establish dimensions within tolerances indicated. Do not scale Drawings to obtain required dimensions.
   4. Inform installers of lines and levels to which they must comply.
   5. Check the location, level and plumb, of every major element as the Work progresses.
   6. Notify Engineer, and Owner, or Owner's Designee, when deviations from required lines and levels exceed allowable tolerances.

7. Close site surveys with an error of closure equal to or less than the standard established by authorities having jurisdiction.

D. Site Improvements: Locate and lay out site improvements, including pavements, grading, fill and topsoil placement, utility slopes, and rim and invert elevations.

E. Record Log: Maintain a log of layout control work. Record deviations from required lines and levels. Include beginning and ending dates and times of surveys, weather conditions, name and duty of each survey party member, and types of instruments and tapes used. Make the log available for reference by Owner, or Owner's Designee.

F. Reference Points: Locate existing permanent benchmarks, control points, and similar reference points before beginning the Work. Preserve and protect permanent benchmarks and control points during construction operations.
   1. Do not change or relocate existing benchmarks or control points without prior written approval of Engineer and Owner, or Owner's Designee. Report lost or destroyed permanent benchmarks or control points promptly. Report the need to relocate permanent benchmarks or control points to Engineer and Owner, or Owner's Designee before proceeding.
   2. Replace lost or destroyed permanent benchmarks and control points promptly. Base replacements on the original survey control points.

G. Benchmarks: Establish and maintain a minimum of two permanent benchmarks on Project site, referenced to data established by survey control points. Comply with authorities having jurisdiction for type and size of benchmark.
   1. Record benchmark locations, with horizontal and vertical data, on as-built documents.
   2. Where the actual location or elevation of layout points cannot be marked, provide temporary reference points sufficient to locate the Work.
   3. Remove temporary reference points when no longer needed. Restore marked construction to its original condition.

H. Final Property Survey: Provide As-Built Survey as required in Section 01 78 39 "Project Record Documents."

3.3 Installation

A. General: Locate the Work and components of the Work accurately, in correct alignment and elevation, as indicated.
   1. Make vertical work plumb and make horizontal work level.
   2. Where space is limited, install components to maximize space available for maintenance and ease of removal for replacement.

B. Comply with manufacturer's written instructions and recommendations for installing products in applications indicated.

C. Install products at the time and under conditions that will ensure the best possible results. Maintain conditions required for product performance until Substantial Completion.

D. Conduct construction operations so no part of the Work is subjected to damaging operations or loading in excess of that expected during normal conditions of occupancy.

E. Sequence the Work and allow adequate clearances to accommodate movement of construction items on site and placement in permanent locations.
F. Tools and Equipment: Do not use tools or equipment that produce harmful noise levels.
G. Hazardous Materials: Use products, cleaners, and installation materials that are not considered hazardous.

3.4 Progress Cleaning

A. General: Clean Project Site and work areas daily, including common areas. Strictly enforce requirements. Dispose of materials lawfully.
   1. Comply with requirements in NFPA 241 and authorities having jurisdiction for removal of combustible waste materials and debris.
   2. Containerize hazardous and unsanitary waste materials separately from other waste. Mark containers appropriately and dispose of legally, according to regulations. Use containers intended for holding waste materials of type to be stored.
   3. Coordinate progress cleaning for joint-use areas where Contractor and other contractors are working concurrently.

B. Site: Maintain project site free of waste materials and debris.

C. Work Areas: Clean areas where work is in progress to the level of cleanliness necessary for safe and proper execution of the Work.
   1. Remove liquid spills promptly.
   2. Where dust would impair proper execution of the Work, broom-clean or vacuum the entire work area, as appropriate.

D. Installed Work: Keep installed work clean. Clean installed surfaces according to written instructions of manufacturer or fabricator of product installed, using only cleaning materials specifically recommended. If specific cleaning materials are not recommended, use cleaning materials that are not hazardous to health or property and that will not damage exposed surfaces.

E. Exposed Surfaces in Finished Areas: Clean exposed surfaces and protect as necessary to ensure freedom from damage and deterioration at time of Substantial Completion.

F. Waste Disposal: Do not bury or burn waste materials on-site. Do not wash waste materials down sewers or into waterways. Comply with waste disposal requirements in Section 01 50 00 "Temporary Facilities and Controls."

G. During handling and installation, clean and protect construction in progress and adjoining materials already in place. Apply protective covering where required to ensure protection from damage or deterioration at Substantial Completion.

H. Clean and provide maintenance on completed construction as frequently as necessary through the remainder of the construction period. Adjust and lubricate operable components to ensure operability without damaging effects.

I. Limiting Exposures: Supervise construction operations to assure that no part of the construction, completed or in progress, is subject to harmful, dangerous, damaging, or otherwise deleterious exposure during the construction period.

3.5 Starting And Adjusting

A. Start equipment and operating components to confirm proper operation. Remove malfunctioning units, replace with new units, and retest.

B. Adjust equipment for proper operation. Adjust operating components for proper operation without binding.

C. Test each piece of equipment to verify proper operation. Test and adjust controls and safeties. Replace damaged and malfunctioning controls and equipment.

D. Manufacturer's Field Service: Comply with qualification requirements in Section 01 40 00 "Quality Requirements."

3.6 Protection Of Installed Construction

A. Provide final protection and maintain conditions that ensure installed Work is without damage or deterioration at time of Substantial Completion.

B. Comply with manufacturer's written instructions for temperature and relative humidity.

END OF SECTION

SECTION 01 77 00 - CLOSEOUT PROCEDURES

PART 1 - GENERAL

1.1 Summary

A. Section includes administrative and procedural requirements for contract closeout, including, but not limited to, the following:
   1. Substantial Completion procedures.
   2. Final completion procedures.
   3. Warranties.
   4. Final cleaning.
   5. Repair of the Work.

B. Related Sections:
   1. Section 01 31 00 “Project Management and Coordination”
   2. Section 01 22 00 “Measurement and Payment Procedures.”
   3. Section 01 78 39 “Project Record Documents.”

1.2 Submittals

A. Contractor's List of Incomplete Items (contractors punch list)

B. Certificates of Occupancy: From authorities having jurisdiction

C. Log of Maintenance Material Items turned over to owner as specified in other Sections.

D. List of Warranties that will begin upon Substantial Completion.

E. Project closeout binder

F. Project as-builts

1.3 Substantial Completion Procedures

A. General: Substantial Completion occurs when the project, or a portion of the project, is fit for its intended use and the Owner can occupy and use the property.

B. Substantial Completion Procedure:
   1. Hold Project Closeout Conference
   2. Submit Contractor's List of Incomplete Items (Contractors Punch list)
   3. Request and Schedule Punch List Walkthrough.
   4. Hold Punch List Walkthrough
   5. Owner Issues Certificate of Substantial Completion

C. Contractor's List of Incomplete Items: When requesting inspection for determining date of Substantial Completion, prepare and submit a list of items to be completed. Include any listed items below that are incomplete at time of request:
   1. Closeout submittals specified in other Division 01 Sections, including project record documents, operation and maintenance manuals, final completion construction photographic documentation, damage or settlement surveys, property surveys, and similar final record information.
   2. Closeout submittals specified in individual Sections, including specific warranties, workmanship bonds, maintenance service agreements, final certifications, and similar documents.
   3. Turnover of maintenance materials as specified in individual Sections, including tools, spare parts, extra materials, and similar items, and deliver to location designated by Owner or Owner's Designee. Label with manufacturer's name and model number where applicable.
   4. Make final changeover of permanent locks and deliver keys to Owner.
   5. Perform preventive maintenance on equipment used prior to Substantial Completion and submit records.
   6. Advise Owner of changeover in control for heat and other utilities.
   7. Final cleaning requirements.
   8. Inspections and Certifications.

Contractor's List of Incomplete Items shall identify each space and area affected by construction operations for incomplete items and items needing correction including, if necessary, areas disturbed by Contractor that are outside the limits of construction.

1. Include the following information at the top of each page:
   a) Project name.
   b) Date
   c) Name of Owner.
   d) Name of Engineer.
   e) Name of Contractor.
   f) Page number
2. Include the following information, or space for information, for each Item:
   a) Item Location (Physical location on site, Submittal Number, or Closeout Book)
   b) Photos
   c) Item Description
   d) Responsible Entity
   e) Date Item was added
   f) Scheduled Completion Date
   g) Completion Date
   h) Owner or Owner's Designee sign-off of acceptance
   i) Comments
3. Submit list of incomplete items in the following format:

a) One PDF electronic file.
b) One electronic Microsoft Excel file (for Owners use in preparing Punch List)

D. Request and Schedule a Punch List Walkthrough: Submit written request to the Owner and Owner's Designee 10 days prior to the work being Substantially Complete and ready for a Punch List Walkthrough. The Contractors List of Incomplete Items shall be submitted with the written request.

E. Punch List Walkthrough: The Owner, Owner's Designee, Engineer, Architect, and Contractor shall perform a joint walkthrough of the completed Work to determine Substantial Completion and identify Work scope that remains to be completed or corrected.
   1. After the walkthrough, the Owner, or Owner's Designee, will issue a formal Punch List documenting Work that needs to be addressed for Project Completion. Contractor's List of Incomplete Items will be included in the Punch List for the Contractor to complete.

   2. Owner, or Owner's Designee will prepare the Certificate of Substantial Completion (AIA G704 -2017 Certificate of Substantial Completion) after inspection or will notify Contractor of specific Punch List items identified by the Owner, or Owner's Designee, that must be completed or corrected before certificate will be issued.

   3. Re-inspection: Request re-inspection when the Work identified for Substantial Completion is completed or corrected.

1.4 Final Completion Procedures

A. General: Final Completion shall be met 40 days after Substantial Completion.

B. Final Completion Procedure:
   1. Submit submittals required for Final Completion
   2. Submit written request for inspection
   3. Final Inspection and Owner Signoff

C. Submittals For Final Completion: Complete the following:
   1. Submit a written request for final inspection.
   2. Submit List of Warranties that will begin upon Final Completion.
   3. Submit a certified copy of Owner's Punch List, endorsed and dated by Owner or Owner's Designee indicating that each item has been completed or otherwise resolved for acceptance.
   4. Certificate of Insurance: Submit evidence of final, continuing insurance coverage complying with insurance requirements.
   5. Submit pest-control final inspection report.

D. Inspection: Submit a written request for final inspection to determine acceptance a minimum of 5 days prior to date the work will be completed and ready for final inspection and tests. On receipt of request, Owner or Owner's Designee will either proceed with inspection or notify Contractor of unfulfilled requirements. After inspection, the Owner or Owner's Designee will endorse and date the Punch List indicating that each item has been completed or otherwise resolved for acceptance.
   1. Re-inspection: Request re-inspection when the Work identified in previous inspections as incomplete is completed or corrected.
   2. Owner endorsement of the Punch List indicating that each item has been completed or otherwise resolved for acceptance will release Contractors Final Invoice for processing.

PART 2 - PRODUCTS (Not Used)

PART 3 - EXECUTION

3.1 Final Cleaning

A. General: Perform final cleaning. Conduct cleaning and waste-removal operations to comply with local laws and ordinances and Federal and local environmental and anti-pollution regulations.

B. Cleaning: Employ experienced workers or professional cleaners for final cleaning. Comply with manufacturer's written instructions.
   1. Complete the following cleaning operations before requesting inspection for certification of Substantial Completion for entire project or for a designated portion of the project:
      a. Clean Project Site, yard, and grounds, in areas disturbed by construction activities, including landscape development areas, of rubbish, waste material, litter, and other foreign substances.
      b. Sweep paved areas broom clean. Remove petrochemical spills, stains, and other foreign deposits.
      c. Rake grounds that are neither planted nor paved to a smooth, even-textured surface.
      d. Remove tools, construction equipment, machinery, and surplus material from project site.
      e. Remove labels that are not permanent.
      f. Leave project clean and ready for occupancy.

3.2 Repair Of The Work

A. Complete repair and restoration operations before requesting inspection for determination of Substantial Completion.

END OF SECTION

SECTION 01 78 39 - PROJECT RECORD DOCUMENTS

PART 1 - GENERAL

1.1 Summary

A. Section includes administrative and procedural requirements for project record documents, including the following:
   1. As-Built Survey
   2. Record Specifications
   3. Record Product Data
   4. Record submittals
   5. Closeout Book

B. Related Sections:
   1. Section 01 40 00 “Quality Requirements”
   2. Section 01 77 00 "Closeout Procedures"

1.2 Closeout Submittals

A. As-Built Survey: Comply with the following:
   1. Submit PDF electronic files, and AutoCAD files of As-Built Survey.

B. Record Specifications: Submit one copy of Project's Specifications, including addenda and contract modifications.

C. Record Product Data: Submit one copy of each Product Data submittal.
   1. Where Record Product Data is required as part of operation and maintenance manuals, submit marked-up Product Data as an insert in the manual instead of submittal as Record Product Data.

D. Record Submittals: See other Specification Sections for miscellaneous record-keeping requirements and submittals in connection with various construction activities. Submit an annotated PDF electronic file of each submittal.

PART 2 - PRODUCTS

2.1 As-Built Documentation

A. Immediately before inspection for Certificate of Substantial Completion, prepare and submit an As-Built Survey, as follows:
   1. As-Built Survey signed and sealed by a professional Land Surveyor, as defined in Section showing property boundary lines, dimensions, locations, angles, and elevations of construction and Site Work.
   2. As-Built Survey shall conform to Class I standards for property lines and Class III standards for topographic conditions as adopted by the Rhode Island Board of

Registration for Professional Land Surveyors, effective June 1, 1994 or most recent amendments.

3. Provide metes and bounds property description.
4. Format: Same AutoCAD program, version, and operating system as the original Drawings.
5. Engineer will furnish, as requested by Contractor, one set of the Drawings in AutoCAD format for use in preparation of the As-Built Survey.
6. Identify and date As-Built Survey; include the designation "As-Built" in a prominent location.
7. As-Built Survey: Organize AutoCAD information into separate electronic files that correspond to applicable sheets of the Drawings.
8. Name each file with the drawing identification. Include identification in each AutoCAD file. Identification: As follows:
    1. Project name.
    2. Name of Owner.
    3. Date.
    4. Designation "As-Built Survey."
    5. Name of Engineer.

2.2 Record Specifications

A. Preparation: Mark Specifications to indicate the actual product installation where installation varies from that indicated in Specifications, addenda, and contract modifications.
    1. Give particular attention to information on concealed products and installations that cannot be readily identified and recorded later.
    2. Mark copy with the proprietary name and model number of products, materials, and equipment furnished, including substitutions and product options selected.
    3. Record the name of manufacturer, supplier, Installer, and other information necessary to provide a record of selections made.
    4. For each principal product, indicate whether record Product Data has been submitted in operation and maintenance manuals instead of submitted as record Product Data.
    5. Note related Change Orders and record Drawings where applicable.
    6. Format: Submit record Specifications as annotated PDF electronic file and paper copy of Specifications.

2.3 Record Product Data

A. Preparation: Mark Product Data to indicate the actual product installation where installation varies substantially from that indicated in Product Data submittal.
    1. Give particular attention to information on concealed products and installations that cannot be readily identified and recorded later.
    2. Include significant changes in the product delivered to Project Site and changes in manufacturer's written instructions for installation.
    3. Note related Change Orders and record Drawings where applicable.

B. Format: Submit record Product Data as annotated PDF electronic file and paper copy of Product Data.
   1. Include record Product Data directory organized by Specification Section number and title, electronically linked to each item of record Product Data.

2.4 Miscellaneous Record Submittals

A. Assemble miscellaneous records required by other Specification Sections for miscellaneous record keeping and submittal in connection with actual performance of the Work. Bind or file miscellaneous records and identify each, ready for continued use and reference.

B. Format: Submit miscellaneous record submittals as annotated PDF electronic file and paper copy miscellaneous record submittals.
   1. Include miscellaneous record submittals directory organized by Specification Section number and title, electronically linked to each item of miscellaneous record submittals.

PART 3 - EXECUTION

3.1 Recording And Maintenance

A. Recording: Maintain one copy of each submittal during the construction period for project record document purposes. Post changes and revisions to project record documents as they occur; do not wait until end of project.

B. Maintenance of Record Documents and Samples: Store record documents and Samples in the office apart from the Contract Documents used for construction. Do not use project record documents for construction purposes. Maintain record documents in good order and in a clean, dry, legible condition, protected from deterioration and loss. Provide access to project record documents for Owner or Owner's Designee reference during normal working hours.

END OF SECTION

SECTION 30 01 20 HEALTH & SAFETY REQUIREMENTS

PART 1 GENERAL

1.1 DESCRIPTION:

The Contractors attention is directed to the fact that the work site contains hazardous materials. The Contractor is likely to encounter hazardous materials during the course of work, and is required to prepare a site-specific Health and Safety Plan certified by a Certified Industrial Hygienist.

Previous site investigation identified soil concentrations that are not compliant with the Rhode Island Department of Environmental Management Rules and Regulations for the Investigation and Remediation of Hazardous Material Releases (Remediation Regulations) industrial/commercial direct exposure criteria. Separate-phase petroleum is present at the site. The soil and groundwater parameters exceeding the Remediation Regulations are provided in the project's Construction Soil Management Plan. The Contractor's employees and Subcontractor's employees who will be potentially exposed to the subsurface soils and groundwater at the RIPTA-Elmwood Paratransit Fueling Station project area are required to have OSHA 40-hour health and safety training and the 8-hour refresher training, if applicable. The Contractor shall provide training certificates to the RIPTA for the persons that will be performing the work.

The Contractor is responsible to monitor working conditions at all times during construction and to provide appropriate protective clothing, equipment and facilities for his personnel, and to establish workplace procedures to ensure their safety, and to enforce the use of these procedures, equipment and facilities in accordance with the following guidelines:

Safety and Health Regulations Promulgated by the U.S. Department of Labor OSHA, 29 CFR 1910 - Occupational Safety and Health Standards, and 29 CFR 1926 - Safety and Health Regulations for Construction.

The Contractor shall engage a qualified Health and Safety expert having experience in similar hazardous waste disposal conditions, to monitor site conditions and recommend all necessary Health and Safety protection. This person shall be a Certified Industrial Hygienist (CIH). The CIH shall prepare a site- specific Health and Safety Plan (HASP) prepared in accordance with the requirements of OSHA's Hazardous Waste Operations and Emergency Response (HAZWOPER) Standard, 29 CFR 1910.120 or 29 CFR 1926.65, paragraph (b)(4) and all other applicable state and federal regulations for all work on this project. The Contractor shall follow the site-specific HASP requirements and recommendations during all site work.

The Contractor shall implement a Health and Safety Protection Program. The Contractor's Health and Safety Protection Program shall establish methods and procedures to be utilized during construction that achieve compliance with the Safety and Health Regulations Promulgated by the U.S. Department of Labor OSHA, 29 CFR 1910 - Occupational Safety and Health Standards, 29 CFR 1926 - Safety and Health Regulations for Construction, and the site-specific HASP. The Contractor shall provide stations allowing workers to wash and to put on and remove protective clothing, stations for vehicles to be cleaned, if necessary, before leaving the site, and air monitoring in accordance with the site-specific HASP and the Rhode Island Department of Environmental Management Air Pollution Control Regulations.

If, at any time, RIPTA is apprised of a safety hazard which demands immediate attention because of its high potential for harm to the public travel, persons on or about the work, or public or private property, the RIPTA shall have the right to order such safeguards to be erected and such precautions to be taken as necessary and the Contractor shall comply with such orders. If, under such circumstances, the Contractor does not or cannot immediately put the work into proper and approved condition, or if the Contractor or his representative is not upon the site so that he can be notified immediately of the

insufficiency of safety precautions, then the RIPTA may put the work into such a condition that shall be, in its opinion, in all respects safe, and the Contractor shall pay all expenses of such labor and materials as may have been used for this purpose by him or by the RIPTA. The fact that the RIPTA does not observe a safety hazard or does not order the Contractor to take remedial measures shall in no way relieve the Contractor of the entire responsibility for any costs, loss or damage by any party sustained on account of the insufficiency of the safety precautions taken by him or by the Owner acting under authority of this Section.

The Contractor is alerted to the fact that conditions of high hazard are present or can be present at the site during the performance of the work. It is the responsibility of the Contractor to take appropriate safety precautions to meet whatever conditions of hazard may be present during the performance of the work, whether reasonably foreseeable or not. The safety conditions enumerated within the Specifications are the minimum permissible and RIPTA does not make any representation that the safety standards provided herein will be adequate to meet all eventualities. The Contractor is therefore alerted to the fact that it shall be his responsibility to anticipate and provide such additional safety precautions, facilities, personnel and equipment as shall be necessary to protect life and property from whatsoever conditions of hazard are present or may be present.

The Contractor shall supply and erect highly visible safety fencing a minimum of six feet in height around all construction areas that pose a threat to safety and shall post proper signage as required by Local, State and Federal requirements. The Contractor shall erect safety fencing as documented on the Contract Drawings or as directed by the RIPTA and shall maintain such fencing and signage until such a time that the potential safety hazard has been rectified. Upon final completion of construction, all safety fencing shall be removed off-site by the Contractor. The Contractor shall enforce safety fencing requirements of OSHA.

During operations, whenever unsafe levels of toxic gases are detected, all work will cease in the area until acceptable levels are reached.

PART 2 - PRODUCT

2.1 MATERIALS:

Not applicable.

PART 3 – EXECUTION

3.1 CONSTRUCTION METHODS:

A. The Contractor shall comply with all applicable local, state, and federal regulations applicable to all work included in the project.

3.2 SHOP DRAWINGS:

A. The Contractor shall submit two copies of the site-specific health and safety plan (HASP) and the Contractor's Health and Safety Protection Program used for work on this project to the RIPTA for record use only.

B. The Contractor and Subcontractor shall submit evidence of initial 40-hour OSHA health and safety training and the 8-hour refresher training, if applicable for each employee that will be engaged in excavation, loading, hauling, stockpiling, and other contaminated soil management related activities completed within the Project area.

PART 4 - MEASUREMENT

4.1 METHOD OF MEASUREMENT**:**

This item will not be measured for payment.

PART 5 - PAYMENT

5.1 BASIS OF PAYMENT:

A. Section 30 01 20 “Health and Safety Requirements” will not be paid for separately. Payment is included in the “contract sum” listed in the Bid Proposal Form. The portion of the “contract sum” representing payment for this section constitutes full and complete compensation for all labor, materials, and for all other incidentals required to finish this work, as discussed in these provisions.

END OF SECTION 30 01 20

SECTION 30 01 55 DISPOSAL OF SOLID WASTE

PART 1 GENERAL

1.1 DESCRIPTION:

A. The work under this specification includes all labor, tools, materials and equipment necessary to completely dispose of all solid waste materials, and the proper disposal of solid waste debris generated on the project. This item of work does not include- materials covered separately under Section 30 02 25 Load, Haul and Dispose Contaminated Soil.

1.2 APPLICABLE LAWS AND REGULATIONS:

A. The Contractor shall ensure that all solid waste and debris removal shall be conducted in accordance with the State of Rhode Island Building Code, and OSHA standard 29 CFR 1926 "Safety and Health Regulations for Construction."

B. The Contractor shall ensure that the solid waste shall be disposed of in accordance with the applicable USEPA regulations (40 CFR 239-259, with all amendments and revisions) and RIDEM Solid Waste Regulations (DEM OWM-SW-04-01, with all amendments and revisions).

C. The Contractor shall obtain all required hauling permits and is responsible for the payment of necessary tipping and other fees required.

D. The Contractor shall immediately notify the Engineer if actual or suspected oil, hazardous material, and/or hazardous waste (OHM), other than that already identified under the contract, are encountered during debris removal. All OHM must be handled according to state and federal regulations and these Special Provisions.

PART 2 – PRODUCT

Not Applicable

PART 3 – EXECUTION

Not Applicable

PART 4 - MEASUREMENT

4.1 METHOD OF MEASUREMENT:

A. Section 30 01 55 “Disposal of Solid Waste” will not be measured separately for payment.

PART 5 - PAYMENT

5.1 BASIS OF PAYMENT:

A. Section 30 01 55 “Disposal of Solid Waste” will not be paid for separately. Payment is included in the “contract sum” listed in the Bid Proposal Form. The portion of the “contract sum” representing payment for this section constitutes full and complete compensation for all labor, handling, storage, hauling, and disposal, and for all other incidentals required to finish this work, as discussed in these provisions.

END OF SECTION 30 01 55

SECTION 30 02 05 – CONTAMINATED SOIL EXCAVATION

PART 1 – GENERAL

1.1 DESCRIPTION:

A. This item includes the excavation of contaminated subsurface soils. All soil excavation within the project's Limit of Disturbance may be classified as contaminated soil excavation. The work shall be performed in accordance with all appropriate sections of the Rhode Island Department of Transportation Standard Specifications for Road and Bridge Construction, 2013 Edition all revisions.

B. The Contractor shall stockpile soils onsite to enable testing. If necessary, the Contractor shall load and haul excavated non-compliant soil and sediment for offsite recycling / disposal in accordance with Section 30 02 25.

1.2 SUBMITTALS:

A. The Contractor shall submit two copies of a Soil Management Plan (SMP) to the RIPTA for review and approval. The SMP shall include a list of all equipment, including sizes and capacities the sequencing of all soil removal activities, all proposed on-site and off-site stockpile locations and their respective capacities, contaminated soil loading and hauling methodologies, and off-site recycling/disposal facilities. All soil excavation within the project's Limit of Disturbance shall be classified as contaminated soil excavation. The Contractor's SMP shall include soil management strategies. The Contractor's sequence of construction shall identify specific excavations and earthmoving operations by baseline and stations. The Contractor's SMP shall include an operation log that will be used to document daily contaminated soil excavation activities.

1.3 HEALTH AND SAFETY PLAN:

A. The Contractor shall comply with the Health and Safety requirements in Section 30 01 20 "Health and Safety Requirements" for all contaminated soil excavation work.

1.4 APPLICABLE LAWS AND REGULATIONS:

A. The contaminated soil excavation shall be conducted in accordance with all applicable Environmental Protection Agency (EPA), the Rhode Island Department of Environmental Management (RIDEM) regulations, and in compliance with all local, state, and federal regulations.

PART 2 – PRODUCT

2.1 MATERIALS:

A. The Contractor shall supply and utilize all required materials to adequately complete contaminated soil excavation. Personal protective equipment shall be utilized as specified in the Contractor's site-specific Health and Safety Plan prepared in accordance with Section 30 01 20, "Health and Safety Requirements."

PART 3 – EXECUTION

3.1 CONTAMINATED SOIL EXCAVATION:

A. The Contractor may choose and implement any effective and lawful method for excavating contaminated soil encountered in the work area provided they perform the required excavation subject to the RIPTA approved Contractor's SMP. The Contractor shall assume all responsibility for the adequacy of the methods, materials, documentation, and equipment employed.

B. The Contractor shall ensure that compliance with applicable regulations is maintained during all contaminated soil earthwork operations. The Contractor shall be required to have available a minimum of two copies of the RIPTA approved Contractor's SMP in the Contractor's project office for use by the Contractor's personnel, subcontractors, and the RIPTA. The Contractor shall be required to maintain an operation log during the contaminated soil earthwork activities to include, but not be limited to, dates of earthwork activities, dates and times of field sampling, soil management observations, and tracking related to stockpile generation. The operation log shall be submitted to RIPTA's Environmental Health and Safety Director or the on-site RIPTA site engineer daily to document the operations associated with contaminated soil earthwork activities. The Contractor and RIPTA's Environmental Health and Safety Director or the on-site RIPTA site engineer shall sign the operating log at the completion of contaminated soil excavation activities. The Contractor shall not resume contaminated soil excavation activities until the daily log for the previous day has been signed by the Contractor and the RIPTA's Environmental Health and Safety Director or the on-site RIPTA site engineer.

C. In addition to the above, the Contractor is responsible for erosion and pollution controls in accordance with local, State and Federal regulations as well as what is included in the Contract Documents.

D. During excavation of contaminated soil, the Contractor shall be required to control dust and sedimentation erosion. If visible dust is generated, the level of dermal and respiratory protection shall be determined based upon periodic air monitoring to be performed by the Contractor and the requirements of the Site-specific HASP and the Rhode Island Department of Environmental Management's Air Pollution Control Regulations. RIPTA may conduct duplicate air monitoring for quality assurance purposes. All excavated dry contaminated soils shall immediately be placed into trucks, covered, and hauled to the RIPTA approved disposal facility.

E. While engaged in contaminated soil excavation work, the Contractor shall be subject to on-site inspection by the RIPTA Environmental Health and Safety Director or the on-site RIPTA site engineer. If the work is in violation of the requirements of this specification, RIPTA will issue a stop work order to be in effect immediately and until the violation is resolved. Standby time and expenses required to resolve the violation shall be at the Contractor's expense.

F. The Contractor shall coordinate contaminated soil excavation with the RIPTA. The Contractor shall provide notification to the RIPTA 72-hours in advance of all contaminated soil excavation work.

G. The Contractor shall notify RIPTA within 24 hours if an unexpected change of conditions related to the presence of hazardous wastes or material is encountered at the site. The Contractor shall not proceed with work in the areas where an unexpected change of conditions related to the presence of hazardous wastes or material is encountered until authorized to do so by the RIPTA.

H. During contaminated soil excavation, the Contractor shall minimize odors by methods including the use of odor suppressant shell material where necessary.

I. The Contractor shall be responsible for obtaining all necessary permits, manifests, and bill of lading documentation in conjunction with contaminated soil and he shall provide timely notification of such actions as may be required by applicable federal, state regional, and/or local authorities.

PART 4 – MEASUREMENT

METHOD OF MEASUREMENT:

A. Section 30 02 05 "Contaminated Soil Excavation" will not be measured separately for payment.

PART 5 – PAYMENT

5.1 BASIS OF PAYMENT:

A. Section 30 02 05 "Contaminated Soil Excavation" will not be paid for separately. Payment is included in the "contract sum" listed in the Bid Proposal Form. The portion of the "contract sum" representing payment for this section constitutes full and complete compensation for all labor, materials, equipment, and for all other incidentals required to finish this work, as discussed in these provisions.

END OF SECTION 30 02 05

SECTION 30 02 25 – LOAD, HAUL, AND DISPOSE CONTAMINATED SOIL

PART 1 – GENERAL

1.1 DESCRIPTION:

A. This item of work includes soil management, special handling, loading and hauling of contaminated soil, and disposal at the RIPTA approved disposal facility in accordance with RIDEM regulations for disposal of these materials and as directed by the RIPTA.

B. If contaminated soil is identified throughout the RIPTA-East Side Tunnel Rehabilitation project area, the work shall be performed in accordance with all appropriate sections of the Rhode Island Department of Transportation Standard Specifications for Road and Bridge Construction, 2013 Edition all revisions, and in compliance with all applicable permits.

C. The Contractor shall stockpile onsite. If necessary, the Contractor shall load and haul excavated non-compliant soil and sediment for offsite recycling / disposal. The Contractor shall be responsible for pre-characterizing the soil and sediment for recycling / disposal and receive approval from the receiving recycling / disposal facility prior to beginning excavation.

1.2 HEALTH AND SAFETY PLAN:

A. The Contractor shall produce and maintain a site-specific Health and Safety Plan (HASP) in compliance with Section 30 01 20 “Health and Safety Requirements.” The site-specific HASP shall be implemented as part of this work.

B. If visible dust is generated, the level of dermal and respiratory protection shall be determined based upon periodic air monitoring to be performed by the Contractor and the requirements of the Site-specific HASP and the Rhode Island Department of Environmental Management’s Air Pollution Control Regulations. The RIPTA may conduct duplicate air monitoring for quality assurance purposes.

1.3 APPLICABLE LAWS AND REGULATIONS:

A. The loading, hauling, and disposal of contaminated soil shall be conducted in accordance with all applicable Environmental Protection Agency (EPA) and the Rhode Island Department of Environmental Management (RIDEM) regulations, the RIDEM approved Construction Soil Management Plan (CSMP), and in compliance with all applicable permits.

B. The Contractor shall ensure that compliance with applicable regulations is maintained during all loading, hauling, and disposal operations. The Contractor shall be required to maintain an operations log during the loading, hauling, and disposal activities to include, but not be limited to, dates of activities, soil management observations, estimated volumes loaded and hauled for offsite recycling/disposal, the recycling/disposal facility the contaminated soil was transported to and paperwork documenting lawful off-site disposition. In addition to the above, the Contractor is responsible for erosion and pollution controls in accordance with local, State and Federal regulations as well as what is included in the Contract Documents. The Contractor shall submit a summary report to the RIPTA on a daily basis to document the operations associated with loading, hauling, and transportation activities.

1.4 SUBMITTALS:

A. The Contractor shall be required to submit a Soil Management Plan in accordance with the Section 30 02 05 Contaminated Soil Excavation submittal requirements that includes their proposed soil management methodologies during the project. The Contractor's Soil Management Plan shall include their proposed excavation, loading, hauling, and stockpiling of soil methodologies to be utilized during the project.

B. The Contractor shall dispose of all contaminated soil at a disposal facility licensed to accept the material. Prior to the commencement of any on-site activities, the Contractor shall submit to RIPTA a list of proposed contaminated soil receiving facilities, along with copies of each facility's license and permit. RIPTA approval of the proposed contaminated soil receiving facilities shall be required prior to any contaminated soil disposal.

C. Prior to the commencement of any on-site activities, the Contractor shall submit to RIPTA a list of proposed contaminated soil transporters, along with copies of each transporter's license and permit. RIPTA approval of the proposed transporter shall be required prior to any contaminated soil transportation.

D. The Contractor shall provide an estimated volume of the soils to be disposed. RIPTA shall approve the estimated volume a minimum of seven (7) days before the soils are loaded, hauled and disposed.

E. The Contractor shall provide two copies of the receiving facility approval for the disposal of contaminated soil at the facility to the RIPTA a minimum of three days prior to the loading, hauling, and disposal of contaminated soil at the facility.

F. The Contractor shall provide two copies of contaminated soil manifest/bill of lading that require RIPTA signature as the waste generator to the RIPTA a minimum of three days prior to the hazardous waste being loaded, hauled and transported for off-site disposal. RIPTA shall sign and return the contaminated soil manifest/bill of lading to the Contractor one day prior to the contaminated soil being transported for disposal.

G. The Contractor shall maintain copies of the contaminated soil operational log. The operational log shall be submitted to RIPTA daily.

H. Hauling Slips: The Contractor shall prepare slips to document the transportation of the contaminated soil from the project to the final disposal site. The slips shall, as a minimum, list the following information: date, truck identification, truck driver's name, approximate quantity of soil hauled, weight, disposal location, and the RIPTA's representative's signature. These slips will be prepared in duplicate. The Contractor shall retain one copy, and the second copy will be given to the RIPTA at the end of each day in which soil is hauled.

I. Copies of all Bill of Ladings, manifests, disposal facility weight slips and any other disposal related documents shall be provided to the RIPTA within 5 days of the disposal work being completed.

PART 2 – PRODUCT

2.1 EQUIPMENT/MATERIALS:

A. The Contractor is required to have the necessary personal protective equipment available as specified in the Contractor's site-specific Health and Safety Plan and shall have access to an inventory of personal protection equipment in the event that the level of personal protection equipment needs to be upgraded.

PART 3 – EXECUTION

3.1 CONTAMINATED SOIL STOCKPILING, LOADING, HAULING, AND DISPOSAL:

A. The Contractor may choose and implement any effective and lawful method for loading, hauling, and disposing of contaminated soil encountered, excavated and/or stockpiled in the work area provided all work is performed in accordance with the project documents and the RIPTA approved documents, outlined in the Contract Documents. The Contractor shall assume all responsibility for the adequacy of the methods, materials, documentation, and equipment employed.

B. The Contractor shall supply and utilize all required equipment to adequately complete the contaminated soil loading, hauling, and disposal. During contaminated soil loading dust, erosion and sedimentation control best management practices shall be installed around the loading areas to minimize the effects of erosion and surface run-off. Erosion control devices shall be installed as shown on the Plans or as directed by the RIPTA.

C. Free liquids shall not be present in the contaminated soil transported for off-site disposal. The Contractor shall be responsible for confirming that free liquids are not present in contaminated soils transported for off-site recycling/disposal. The Contractor shall be responsible for all costs related to off-site impact from free liquids present in contaminated soil being transported for off-site disposal including, but not limited to, regulatory compliance, fines and penalties, and response actions.

D. While engaged in contaminated soil loading and hauling the Contractor shall be subject to on-site inspection by RIPTA representatives. If the work is in violation of the requirements of this specification, RIPTA will issue a stop work order to be in effect immediately and until the violation is resolved. Standby time and expenses required to resolve the violation shall be at the Contractor's expense.

E. The Contractor shall be responsible for obtaining all necessary permits, manifests, and bill of lading documentation in conjunction with contaminated soil loading, hauling and disposal; and shall provide timely notification of such actions as may be required by applicable federal, state regional, and/or local authorities. RIDEM shall be notified within 24 hours if an unexpected change of conditions is encountered related to the presence of hazardous wastes or material encountered at the site.

F. There are two alternatives for excavated contaminated soil management. Contaminated soil can be stockpiled on-site at a location within the limits of disturbance. The Contractor shall be responsible for coordinating the stockpile location with RIPTA. The contaminated soil stockpile shall be constructed in conformance with the contaminated soil stockpile detail provided in the Contract plans. The second option is contaminated can be excavated, loaded, and hauled to the RIPTA approved disposal facility.

G. The Contractor shall be responsible for all costs including but not limited to labor, laboratory analytical, application fees, and federal, state, and local regulatory fees associated with classifying contaminated soil for disposal at the RIPTA approved disposal facility. The Contractor shall be responsible for pre-classifying the contaminated soil for direct loading, hauling, and beneficial reuse/disposal shall include collecting any additional soil samples, the laboratory analysis of the additional soil samples, preparing any submittals required by the RIPTA approved disposal facility, and obtaining approval for disposal at the RIPTA approved disposal facility. The Contractor shall submit a copy of the RIPTA approved disposal facility acceptance for the disposal of contaminated soil at the facility to the RIPTA. Where specifications, requirements, and reference documents vary, the more stringent requirements shall apply.

PART 4 – MEASUREMENT

4.1 METHOD OF MEASUREMENT:

A. Section 30 02 25 "Load, Haul, and Dispose Contaminated Soil" will be measured for payment by the "Ton" actually loaded, hauled and disposed in accordance with the Contract Documents and/or as directed by the RIPTA. The number of tons will be determined from weight slips, generated by the receiving disposal facility or other Contractor provided scale approved by the RIPTA.

PART 5 – PAYMENT

5.1 BASIS OF PAYMENT:

A. The "Load, Haul, and Dispose Contaminated Soil" will be paid for at the contract unit price per "ton" actually loaded, hauled and disposed as an as needed allowance. The unit price per ton shall constitute full and complete compensation for all labor, materials, tools, and equipment and all other incidentals required to complete the work as described in the Contract Documents, complete in place and accepted by the RIPTA.

B. Final payment for "Load, Haul, and Dispose Contaminated Soil" will not be made until all disposal documentation including but not limited to manifests and/or bills of ladings and disposal receipts have been submitted and approved by the RIPTA.

END OF SECTION 30 02 05

SECTION 31 20 00 EARTHWORK

PART 1 – GENERAL

1.1 RELATED DOCUMENTS

A. The General Conditions, Supplementary Conditions and applicable portions of Division 1 of the Specification are a part of this Section, which shall consist of all labor, materials, equipment, tools, construction equipment and machinery, water, heat, utilities, transportation and other facilities and services necessary for the proper execution and completion of the work, whether temporary or permanent and whether or not incorporated or to be incorporated in the work; and as related to the project or projects defined in the Bidding Requirements.

1.2 WORK COVERED BY CONTRACT DOCUMENTS

A. Project Location: RIPTA – East Side Tunnel Rehabilitation

Providence, Rhode Island

B. Owner: Rhode Island Public Transit Authority

C. Owner's Representative: John Plouffe

D. Engineer: WSP Bldg 5 166 Valley Street Providence RI 02909

E. Contractor: To be determined.

1.3 SUMMARY OF WORK:

A. Earthwork shall consist of activities associated with the installation of underground piping, conduit and any other necessary earthwork to complete the project., Suitable excavated material shall be reused on-site. Unsuitable excavated materials shall be removed from the site. Topsoil stripped from the site may be stockpiled, cleaned of sticks, roots and other debris and reused in areas designate as loam and seed". All earthwork grading shall be in reasonably close conformity with the dimensions and sections indicated on the Plans or as directed by the Engineer.

B. All soil excavation within the project's Limit of Disturbance shall be classified as contaminated soil excavation and be completed in accordance with 30 02 05 Contaminated Soil Excavation.

i. **Earth Excavation –** Earth excavation shall include the removal of suitable and unsuitable soils and the removal of boulders, stones, rock fragments and debris from any area within the Limit of Disturbance.

ii. **Excavation of Unsuitable Soils –** Unsuitable materials shall only be excavated as directed by the engineer. Unsuitable soils shall include and are hereby defined as those soils, other than muck, which due to their consolidation properties, degree of saturation, graduation, or other deleterious characteristics will not provide a stable sub-grade and cannot be used to support embankment, or do not otherwise conform to the requirements of these Specifications. Voids created by excavation of unsuitable materials shall be backfilled with Gravel Borrow.

1.4 RELATED SECTIONS

30 01 20 – HEALTH AND SAFETY REQUIREMENTS
30 02 05 – CONTAMINATED SOIL EXCAVATION

1.5 SUBMITTALS

A. Product Data: Submit manufacturer's product data and installation instructions for each geogrid product proposed for use.

B. Test reports: Submit for approval for each backfill material proposed for use, test reports, list of materials and gradation results.

1.6 QUALITY ASSURANCE

A. Compaction: Outside paved areas, 90-percent maximum dry density as determined by ASTM D-1557.

B. Compaction: Under paved areas, 95-percent maximum dry density as determined by ASTM D-1557.

C. Grading tolerances: Grading tolerances shall be as specified in SECTION 204 of the R.I. Standard Specifications

PART 2 – PRODUCT

2.1 MATERIALS.

A. The following references to the RIDOT Standard Specifications for Road and Bridges apply:

i. Common Borrow; Subsection M.01.01

ii. Gravel Borrow; Subsection M.01.02

PART 3 – EXECUTION

3.1 CONSTRUCTION METHOD

A. **Project Specifications:** Specifications governing work under this contract for Erosion Control shall be The Rhode Island Standard Specifications for Highway and Bridge Construction, amended 2013 edition with latest revision, complete with recent compilations of approved specifications, Rhode Island Standard Details, 1998 Edition, with all revisions Codes and the Job Specific Specifications, hereinafter referred to as the "Project Specifications".

B. **Methods of Construction:** All work shall be done in accordance with the **"Project Specifications"** as referenced above, or as more specifically specified elsewhere in these specifications. In the event of a conflict in the specifications the more stringent specification shall apply.

PART 4 – MEASUREMENT

Not applicable

Part 5 – PAYMENT

5.1 BASIS OF PAYMENT

A. Earthwork will not be paid for separately. Payment is included in the Unit Price for item 202.0100 listed in the Bid Proposal Form. The portion of the "contract sum" representing payment for Earthwork constitutes full and complete compensation for all labor, materials and equipment for stripping, excavation, trimming and fine grading, proof rolling, placement and compaction of embankments and for all other incidentals required to finish this work, complete and accepted by the Engineer.

END OF SECTION 31 20 00

CODE 201.9901
REMOVE AND DISPOSE TUNNEL LIGHTING SYSTEM

DESCRIPTION.

The work shall include the removal of existing tunnel lighting system and shall be legally disposed of off-site according to local and state regulations at the Contractor's expense.

METHOD OF MEASUREMENT.

Remove and dispose of the tunnel lighting system will be measured by and paid for at Contract unit price per Lump Sum, which price shall include all labor, materials, equipment, disposal, and incidental costs required to complete the work.

BASIS OF PAYMENT.

Remove and dispose of the tunnel lighting system will be paid for at the Contract unit price per Lump Sum. The price constitutes full and complete compensation for all materials, luminaire support, luminaire, driver, and conduit, and all labor, tools, equipment, and all incidentals required to finish the work, complete in place and accepted by the Engineer.

CODE 201.9902
SELECTIVE DEMOLITION

201.9902.01 DESCRIPTION. This work consists of the removal and demolition of damaged brick at the tunnel arched façade and the electrical room, and any damaged bricks and bricks in need of replacement at the rear wall of the bus shelter, and areas of damaged brick at the East boat wall section. Demolition also includes the removal of all the existing ceramic tiles, including ceramic ornaments on columns and damaged brick behind tiles, the electrical room door and damaged brick and vent louver at the interior wall of the bus shelter, damaged metal trim panels, as well as paint from all sheet metal elements associated with the bus shelter and from iron columns and guard rail fence above the brick and granite retaining wall.

201.9902.02 SUMMARY. Section Includes:

a. Demolition and removal of damaged brick at the tunnel arched façade, electrical room, bus shelter, East boat wall.

b. Demolition and removal of existing tile and ceramic ornaments at the interior wall and columns of the bus shelter.

c. Demolition and removal of existing steel vise on top of the roof,

d. Demolition and removal of existing damaged masonry of the area at the stone wall and roof.

e. Removal of all damaged metal trim and panels and the entire roof drainange system

f. Removal of all deteriorated or damaged Bus Shelter wood ceiling planks and trim.

g. Removal of all paint from sheet metal at the shelter roof, soffit, columns (but not capitals).

h. Removal of paint from the guard rail fences over the approach boat walls.

i. Removal of the louver and door at the west wall of the electrical room.

201.9902.03 MATERIALS OWNERSHIP.

a. Unless otherwise indicated, demolition waste becomes property of Contractor.

b. Historic items, relics, antiques, and similar objects including, but not limited to, cornerstones, and their contents, commemorative plaques and tablets, and other items of interest or value to Owner that may be uncovered during demolition remain to the property of Owner.

1. Carefully salvage in a manner to prevent damage and promptly return to Owner.

2. Interior Bus Shelter Tile Wall: Carefully remove entire tile wall to uncover existing condition of substrate behind tile.

201.9902.04 PREINSTALLATION MEETINGS.

a. Pre-demolition Conference: Conduct conferences at RIPTA East Side Tunnel Bus Shelter, Providence, Rhode Island.

201.9902.05 INFORMATIONAL SUBMITTALS.

a. Engineering Survey: Submit engineering survey of condition of building.

b. Proposed Protection Measures: Submit report, including Drawings, that indicates the measures proposed for protecting individuals and property, for environmental protection, for dust and noise control. Indicate proposed locations and construction of barriers.

c. Schedule of selective demolition activities with starting and ending dates for each activity.

d. Pre-demolition photographs or video.

e. Closeout Submittal: Inventory of items that have been removed and salvaged.

201.9902.06 QUALITY ASSURANCE. Paint removal from sheet metal and cast iron shall follow the recommendations listed in the Standards for Preservation & Guidelines for Preserving Historic Building, as written in the Secretary of The Interior's Standards For The Treatment Of Historic Properties.

201.9902.07 FIELD CONDITIONS.

a. Conduct selective demolition so Owner's operations will not be disrupted.

b. Existing bus stop or bus routes shall be re-routed if necessary. Coordinate alternate routes and bus stops with Owner and required authorities.

c. Conditions existing at time of inspection for bidding purpose will be maintained by Owner as far as practical.

d. Before selective demolition, Owner will remove any items necessary for removal.

e. Notify architect of discrepancies between existing conditions and Drawings before proceeding with selective demolition.

f. Hazardous Materials: Hazardous materials including asbestos, will be removed by Owner before start of Work. If suspected hazardous materials are encountered, do not disturb immediately notify Architect and Owner. Hazardous materials will be removed by Owner under separate contract.

g. Lead Paint: Contractor shall be responsible for removal of paint from existing elements that are designated for demolition and removal of paint product from elements to remain. Contractor is advised that some or all the paint may contain lead and shall be responsible for paint testing prior removal and paint removal in accordance with OSHA, State and Federal regulations. In addition, paint removal shall be done in the most gentile means possible to achieve satisfactorily results, per approved historic review and mockup.

h. Storage or sale of removed items or materials on site is not permitted.

f. Utility Service: Maintain existing utilities indicated to remain in service and protect them against damage during selective demolition operations. Maintain fire protection facilities in service during selective demolition operations.

g. Arrange selective demolition schedule so as not to interfere with Owner's operations.

201.9902.08 PERFORMANCE REQUIREMENTS.

a. Regulatory Requirements: Comply with governing EPA notification regulations before beginning selective demolition, Comply with hauling and disposal regulations of authorities having jurisdiction. Refer also to Lead Paint section above.

b. Standards: Comply with ANSI/ASSP A10.6 and NFPA 241.

201.9902.09 EXAMINATION.

a. Engage professional engineer to perform an engineering survey of condition of building to determine whether removing any element might result in structural deficiency or unplanned collapse of any portion of structure or adjacent structures during selective building demolition procedures.

b. Inventory and record of condition of items to be removed and salvaged.

201.9902.10 PREPARATION AND PROTECTION.

a. All areas exposed during demolition shall be protected.

b. Temporary Protection: Provide temporary barricades and other protection required to prevent injury to people and damage to adjacent buildings and facilities to remain.

c. Temporary Shoring: Design, provide, and maintain shoring, bracing, and structural supports as required to preserve stability and prevent movement, settlement, or collapse of construction and finishes to remain, and to prevent unexpected or uncontrolled movement or collapse of construction being demolished.

d. Remove temporary barricades and protections where hazards no longer exist.

201.9902.11 UTILITY SERVICES AND MECHANICAL/ELECTRICAL SYSTEMS.

a. Provide protection for existing conduit pipe and other equipment remaining on the roof and along the rear brick wall during demolition and all phases of construction.

201.9902.12 SELECTIVE DEMOLITION.

a. General: Demolish and remove existing construction only to the extent required by new construction and as indicated. Use methods required to complete the Work within limitations of governing regulations and as follows:

1. Neatly cut opening and holes plumb, square, and true to dimensions required. Use cutting methods least likely to damage construction to remain or adjoining construction. Use hand tools or small power tools designed for sawing or grinding, not hammering and chopping. Temporarily cover opening to remain.

2. Cut or drill from exposed or finished side into concealed surfaces to avoid marring existing finished surfaces.

3. Locate selective demolition equipment and remove debris removal operations to ensure minimum, interference with roads, streets, walks, walkways, and other adjacent occupied and used facilities.

b. Removed and Salvaged Items:

1. Clean salvaged items.

2. Pack or crate items after cleaning. Identify contents of containers.

3. Store items in a secure area until delivery to Owner.

4. Transport items to Owner's storage area.

5. Protect items from damage during transport and storage.

c. Removed and Reinstalled Items:

1. Clean and repair items to functional condition adequate for intended reuse.

2. Pack or crate items after cleaning and repairing. Identify contents of containers.

3. Protect items from damage during transport and storage.

4. Reinstall items in locations indicated. Comply with installation requirements for new materials and equipment. Provide connections, supports and miscellaneous materials necessary to make item functional for use indicated.

d. Existing Items to Remain: Protect construction indicated to remain against damage and soiling during selective demolition. When permitted by Architect, items may be removed to a suitable, protected storage location during selective demolition, cleaned, and reinstalled in their original locations after selective demolition operations are complete.

201.9902.13 CLEANING.

a. Remove demolition waste materials from Project site and dispose of them in an EPA-approved construction and demolition waste landfill acceptable to authorities having jurisdiction.

1. Do not allow demolished materials to accumulate on site.

2. Remove and transport debris in a manner that will prevent spillage on adjacent surfaces and areas.

3. Remove debris from elevated portions of building by chute, hoist, or other device that will convey debris to grade level in a controlled descent.

b. Do not burn demolished materials.

c. Clean adjacent structures and improvements of dust, dirt, and debris caused by selective demolition operations. Return adjacent areas to condition existing before selective demolition operations began.

201.9902.15 METHOD OF MEASUREMENT. "Selective Demolition" for the removal and disposal of the brick and tile at tunnel façade, electrical room, and bus shelter will be measured by and paid for at Contract unit price per "Lump Sum", which price shall include all labor, materials, equipment, disposal, and incidental costs required to complete the work.

201.9902.16 BASIS OF PAYMENT. "Selective Demolition" for removal and disposal of the brick and tile at tunnel façade, electrical room, and bus shelter will be paid for at the Contract unit price per "Lump Sum". The price constitutes full and complete compensation for all materials, luminaire support, luminaire, driver, and conduit, and all labor, tools, equipment, and all incidentals required to finish the work, complete in place and accepted by the Engineer.

CODE 701.9901
FIRE STANDPIPE SYSTEM PIPING AND APPURTENANCES

GENERAL

SUMMARY

A. Provide the Work of this Section in accordance with requirements of the Contract Documents.
B. This Section specifies requirements of piping and appurtenances for the fire standpipe systems.
C. Standpipe water service installed under this Section ends at the building line unless otherwise shown on the Contract Drawing. Types of material and installation of the piping under this Section shall be compatible.

DESIGN AND PERFORMANCE REQUIREMENTS

A. Design and performance of components and methods specified herein shall comply with all applicable Federal, State and Local laws, ordinances, regulations and codes, as though the Authority were a private corporation, and with the latest industry standards including, but not limited to, the entities listed below:
   Rhode Island Building Code
   Rhode Island Fire Code
   American National Standards Institute (ANSI)
   American Society for Testing and Materials (ASTM)
   American Water Works Association (AWWA)
   National Fire Protection Association (NFPA)
   Underwriters Laboratories Inc. (UL)
B. In addition, specific provisions cited herein shall govern for the associated specific application.
C. The fire standpipe system design shall be based on water supply information as shown on the Contract Drawing or, if not shown, as determined by a water flow test by the Contractor.
D. DELEGATED DESIGN:
   1. Piping support systems shall be designed for flexibility in accordance with ASME B31.9. No credit for cold spring shall be permitted. Reactions and moments on supporting elements shall be determined. Loads on and spacing of supporting elements shall take into account dead loads, live loads, occasional loads and test loads. The weight of tests fluid and occasional loads need not to be considered concurrently. Loads due to shock and vibration shall be minimized by use of dampers, isolation, or restraining devices. Where additional supports are required during testing, these shall be noted in the design.
   2. Piping systems in Seismic Design Category C may be designed using NFPA 12 requirements.
   3. Supporting elements for piping and equipment shall be designed to withstand the maximum loading combinations determined in the piping systems load analysis. Supporting elements, structural attachments, and the building structural elements shall not exceed the loads and stresses under conditions described in ASCE 7-22.

QUALITY ASSURANCE

A. Fire standpipe system piping and appurtenances, of types and sizes required, shall have been satisfactorily used for purposes similar to those intended herein for not less than three years.
B. Entities performing Work shall have experience on at least two projects involving complexities similar to those required under this Contract.
C. All grooved joint couplings, fittings, valves, and specialties shall be the products of a single manufacturer. Grooving tools shall be of the same manufacturer as the grooved components.
    1. All castings used for coupling housings, fittings, valve bodies, etc., shall be date stamped for quality assurance and traceability.

DELIVERY, STORAGE, AND HANDLING

A. Clean all pipe sections of foreign matter and cover ends with temporary sheet metal closures or plastic end caps of sufficient tightness to prevent entry of foreign matter prior to shipping to the construction site.
B. Store pipe, fittings, valves and other components at the construction site on pallets or raised platforms with suitable coverings satisfactory to the Engineer to protect them against damage and weather.
C. Inspect all pipe, fittings, valves and other components for damage before moving them from storage to the point of installation at the construction site.

SUBMITTALS

A. Shop Drawing.
    a. Show complete details for installation of materials and each item of equipment. Shop drawings shall be signed and sealed by a qualified professional engineer responsible for their preparation.
B. Working Drawings: Show layout and complete details for piping installation, including hangers, supports and anchors.
C. Manufacturer's Literature: Submit for each different type material or product complete descriptions, and catalog data that indicates makes, types, and trade designations.
D. Operations and Maintenance Data: Submit operating and maintenance instructions for each different type of equipment provided.
E. Hydraulic calculations: Submit hydraulic calculations signed and sealed by a qualified professional engineer responsible for their preparation.
F. Seismic restraints: Submit seismic restraint calculations signed and sealed by a qualified professional engineer responsible for their preparation.

PRODUCTS

PIPE, FITTINGS, AND FLANGES

A. Provide pipe, fittings, and flanges in accordance with the "Pipe, Fittings and Flanges Schedule" specified below, including gaskets, bolts, nuts, washers and other pressure containing parts necessary for the complete installation of piping systems.
B. Nipples shall be extra-heavy shoulder-type of same material as pipe; close nipples are not acceptable.
C. Grooved Piping Mechanical Couplings
    1. Couplings shall consist of two ductile iron housing segments, complete with gaskets, bolts and nuts recommended by the manufacturer for the service. Use vandal proof nuts and bolts on vertical piping in stairs.

2. Rigid type coupling housings with offsetting, angle-pattern bolt pads to provide system rigidity and support and hanging in accordance with NFPA-13. Couplings shall be fully installed at visual pad-to-pad offset contact. Couplings that require gapping of bolt pads or specific torque ratings for proper installation are not permitted. Installation-Ready, for direct stab installation without field disassembly. Basis of Design: Victaulic “Style 009H and 107N”.
3. Flexible couplings shall be Victaulic Installation-Ready “Style 177” UL listed and FM approved for working pressure to 350 psi; "Style 75" lightweight for system pressure not exceeding 400 psi (including shutoff pressure of fire pump and static street pressure of water main) and Victaulic "Style 77" for system pressure exceeding 400 psi, or approved equal. Flush-seal gaskets shall be used on all dry standpipe system piping.
    1. Couplings shall be manufactured by Victaulic Co. of America; Tyler Pipe Subsidiary, Tyler Corp./Gustin-Bacon Division; Gruvlock Couplings by Grinnell; or approved equal.

Table 1 - Pipe, Fittings and Couplings Schedule

Systems	Pipe	Fittings and Couplings
Dry Standpipe and Automatic Ball Drip Drain	Galvanized Steel, ASTM A 795 or A 53, Schedule 40	All fittings shall be galvanized Ductile Iron ASMT A 536, Roll Grooved., Galvanized Ductile Iron ASTM A 536, Roll Grooves, Mechanical Type Couplings and Gaskets
In applicable sizes, fittings shall be short-pattern, with flow equal to standard pattern fittings, Victaulic “FireLock”.		

VALVES

A. Drain Valves (Dry Systems)
    1. Valves shall be threaded, bronze, angle or globe type with composition disc, 200 psi w.w.p, or as shown on the contract drawing.
    2. At system low points where drain piping does not extend to a drain receptacle, provide a threaded hose end adapter at the valve outlet.
    3. Valves shall be manufactured by Crane Co., Walworth Co., Stockham Valves & Fittings, or approved equal.

FIRE DEPARTMENT CONNECTIONS

A. Siamese Connections
    1. Siamese connections shall be two-way type, having a brass body, with clapper valves, hose thread swivels and red painted plugs, as required by local code. Provide the Siamese connections with breakable caps, unless otherwise indicated on the Contract Drawings.
    2. Siamese connections shall be Potter-Roemer Series 5710 or approved equal.
    3. Finish of Siamese connections shall be polished brass unless otherwise shown on the Contract Drawings.

B. Fire department connection shall be labeled as “DRY STANDPIPE” in raised cast form on surface of either fitting of escutcheon. Exposed parts including escutcheon, shall have either polished brass or polished chromium-plated finish. Provide polished brass or polished chromium-plated finish. Provide polished brass plate for flush fire department connections with 1 inch engraved letters labeled same as connection.

AUTOMATIC BALL DRIPS:

A. Provide automatic ball drips manufactured as cast brass automatic drip connections that close at approximately 7 to 10 pounds per square inch (PSI) on inlet side of check valve on Fire Department Connections.

PIPE HANGERS AND SUPPORTS

A. Design, fabricate and provide all pipe hangers and supports adequate to support and guide the piping, allow for forces imposed by expansion joints, satisfy structural requirements and maintain proper clearances with respect to adjacent piping, equipment and structures.
B. Provide hangers and supports, with beam clamps, restraints, supplemental steel, inserts, fish plates, mounting devices, and similar items to support piping in alignment without sagging or interference, and to permit complete drainage and free expansion and contraction.
C. All hangers and supports shall be capable of screw adjustment after piping is erected and shall be provided with a locking nut (double nut) to prevent loss of adjustment.
D. Where required, provide anchors, sway bracing, blocking and steel to connect to structure to prevent excessive pipe movement that could cause damage due to expansion, contraction, or thrust.
E. All pipe hangers, inserts, supports, supplemental steel, rods, and components shall be galvanized.
F. Support hangers from building steel framing wherever possible. Provide any additional miscellaneous steel supports between existing framing members as required. Do not support piping from other piping, ductwork and conduit.
G. Tabs in metal deck construction shall not be used to support piping.
H. Where required, provide supplemental channels and steel to support Work of this Section. Cut ends of steel shall be ground smooth, free from burrs and sprayed with a galvanized coating.
I. Where several pipes rest on a common trapeze, increase hanger rod diameter and decrease spacing in accordance with maximum and minimum pipe sizes, respectively.
J. Mechanical Anchor Bolts: Drilled-in undercut expansion type in 316 stainless steel for all applications for use in hardened Portland cement concrete. Undercut anchor with pull-out, tension, and shear capacities appropriate for supported loads and building materials where used. Stainless steel anchors shall be manufactured from materials conforming to ISO 3506 Part 1 and having corrosion resistance equivalent to AISI Type 316 stainless steel. Stainless steel anchors shall be provided with stainless steel nuts and washers of matching alloy group and minimum proof stress equal to or greater than the specified minimum full-size tensile strength of the externally threaded fastener. The undercut anchor shall be Hilti model HDA-TR or equal as manufactured by DeWalt, or Simpson.
K. Provide pipe restraints to prevent movement by an upward thrust in the pipe risers.
L. Support vertical piping at the lowest level, at each alternate level above and below offsets, and at the top of the riser by use of riser clamps. Provide additional intermediate support brackets, secured to structure, on piping utilizing gasket coupling joints.
M. Hanger system shall not penetrate waterproofing.
N. If removal of existing fireproofing is required for installation purposes, such removal shall be performed by the Contractor and shall be kept to a minimum. The Contractor shall replace all removed fireproofing with new fireproofing to the satisfaction of the Engineer and at no additional cost to the Authority.

O. Unless otherwise specifically approved, hanger rod size and spacing shall conform to NFPA 14 requirements and be within the following limits:

Table 2 - Pipe, Hanger and Rod Schedule

Pipe Size	Maximum Hanger Spacing	Minimum Rod Size
Up to 4”	15 ft. o.c.	3/8”
5”	15 ft. o.c.	1/2”
6”	15 ft. o.c.	1/2”
8”	15 ft. o.c.	1/2”
10” and 12”	15 ft. o.c.	5/8”

P. Hangers and supports shall meet MSS SP-58 requirements, shall comply with the requirements of chapter 9 of NFPA 13 as required by NFPA 14, and shall be manufactured by Grinnell Corp., Carpenter & Patterson Inc., Michigan Hanger Co. Inc., or approved equal.

SLEEVES, SEALS AND ESCUTCHEONS

A. Piping passing through masonry or concrete walls and framed partitions shall have a trim opening cut no greater than necessary for the installation of a sleeve secured therein. Sleeve shall be 1/2 inch in diameter larger than the outside diameter of the pipe. Sleeve shall be flush with the finished wall or partition surface.

B. Sleeves shall be galvanized steel pipe, Schedule 40 for sizes up to 10 inches and 3/8-inch wall thickness for 12 inches and larger. Sleeves in partitions shall be 20-gauge galvanized sheet metal.

FIRE HOSE CABINETS

A. Recessed fire hose cabinets shall be 18-gage, type 316 stainless steel construction with solid door with horizontal continuous stainless steel hinge. Provide No. 4 finish on all visible exterior surfaces. Cabinet locations shall be as indicated.

B. Surface mounted fire hose cabinets shall be 18-gage, type 316 stainless steel construction with solid door and continuous stainless steel hinge. Provide No. 4 finish on all visible exterior surfaces. Fire hose cabinet locations shall be as indicated on the Contract Documents.

C. Fire hose cabinet doors shall be 12-gage 316 stainless steel, hinged, positive latch device. Submit shop drawings for layout approval.

D. Each cabinet shall contain one 2-1/2-inch cast-brass angle-hose valve body with 2-1/2-inch outlet with fire department hose thread end and cap with chain, and escutcheon plates. Cabinet doors will not be installed by means of spanner wrench, except cabinet doors are locked and spanner wrench is not visible due to cabinet door style.

EXECUTION

INSTALLATION

A. General

1. Install piping and appurtenances in accordance with manufacturers' installation procedures, requirements of NFPA 14, and as specified.
2. Coordinate piping installation with other Work to avoid interference. Coordinate as necessary to ensure that all hangers, supports, sleeves and other built-in devices are incorporated in forms or in masonry to avoid necessity of cutting finished structure.

3. All measurements, both horizontal and vertical, shall be based on established benchmarks. All Work shall agree with these established lines and levels. Verify all measurements at site and check the correctness of same as related to the Work.

B. Piping

1. Install piping as shown on the Contract Drawing and straight and direct as possible, forming right angles or parallel lines with building walls, neatly spaced, with risers plumb and true.
2. Avoid tool marks and unnecessary pipe threads. Burrs formed when cutting pipe shall be removed by reaming. Before installing pipe, thoroughly clean the inside free of cutting and foreign matter. Cut all piping square and smooth and make up all joints to required limits.
3. Make changes in pipe size by the use of reducing fittings. Do not use reducing bushings except by approval of the Engineer.
4. Coordinate Work specified in this Section with that specified in other Sections to avoid any interference with potential effectiveness of the fire standpipe systems.
5. Provide protective pans under pipes passing over high voltage electric bus duct or switchgear equipment. Construct the pans of 18-gauge copper, suitably reinforced to prevent sagging. Turn the edges of the pans up to 6 inches on all sides with corners brazed to make the pans watertight. Support the pan with hangers and provide drainage clear of the electrical work.
6. Dry systems shall be installed so that the system can be drained.
7. All piping shall be thoroughly blown out, rodded out, or washed out at least twice, in a manner as directed and approved by the Engineer, to remove all accumulation of dirt, chips or other deleterious materials. Make all temporary connections and furnish all appliances required for the purpose of cleaning.

C. Pipe Joints

1. Threaded joints shall be made up tight using pipe joint Teflon compound or tape, applied on the male threads only.
2. Grooved pipe and fittings shall be clean and free from indentations, projections and tool marks in the area from pipe end to groove for proper gasket sealing. Provide a thin uniform coat of lubricant on the suitable gasket intended for specified service as recommended by the manufacturer. Place the gasket over one pipe end, align pipe ends and bring together, positioning the gasket between the groove on each pipe end. Assemble the housing over the gasket with housing key section engaging both grooves. The bolts shall be inserted, nuts started and uniformly tightened until the housing bolt pads are firmly seated together, metal to metal.
    1. A factory trained representative (direct employee) of the coupling manufacturer shall provide on-site training for contractor's field personnel in the use of grooving tools, application of groove, and product installation. The representative shall periodically visit the job site and review installation to ensure best practices in grooved joint installation are being followed. Contractor shall remove and replace any improperly installed products.
3. Flanged joints shall be made up square and tight with gaskets. Dip bolts and nuts in mixture of graphite and oil immediately prior to installation.
4. Joints between copper or brass and steel pipe shall be made by using a dielectric coupling.

FIELD TESTS

A. Notify the Engineer and those authorities having jurisdiction, at least 48 hours in advance of making the required tests, so that arrangements may be made for their presence to witness the tests.
B. Perform all tests prior to painting or concealing.
C. Isolate all equipment, controls and instruments from the piping system during the required tests.
D. Provide and install necessary equipment, instruments, hardware, temporary piping, vents, drains, and include necessary personnel required to perform all tests.
E. Perform hydrostatic tests for all sections of the piping systems (except siamese connections), at not less than 200 psi pressure for two hours, or at 50 psi in excess of the maximum pressure, when the maximum pressure to be maintained in the system is in excess of 150 psi. Test pressure for siamese connections shall not be less than 300 psi. The test pressure shall be read from a gauge located at the low elevation point of the individual system or portion of the system being tested.
F. Test dry-pipe systems with air at 40 psi for 24 hours, prior to performing the hydrostatic tests specified in3.02 E above. Permissible air leakage shall not exceed the value specified in NFPA 14.
G. Set the adjustable pressure reducing devices according to the manufacturer's instructions to produce flows at the required rate and pressure in accordance with the applicable code requirements, as if this Contract were being performed for a private corporation. A written record shall be furnished to the Engineer of all settings throughout the system.
H. With the entire system under normal operating pressure, each control valve shall be opened and closed to demonstrate proper operation.
I. All tests shall conform to the requirements of NFPA 14. Records of all tests shall be made available for the Engineer's inspection, as required.
J. Should the tests reveal any leaks or deficiencies in piping installed under this Section, make necessary corrections immediately and flush, clean and retest the system for the Engineer's approval at no cost to the Authority.
K. Repair or replace any portion of the system installed under this Section that is damaged as a result of test operations at no cost to the Authority.
L. The Engineer reserves the right to direct the Contractor not to isolate the newly installed piping from the existing system during the performance of the required field tests. In such event, the Contractor shall correct any revealed leaks or other deficiencies within the first 20 feet of the existing system, measured in any direction from the point of connection with the newly installed piping, all as directed by the Engineer and at no additional cost to the Authority.
M. Dispose of water removed from pipelines in a manner that shall not cause damage to any property.

PIPE AND VALVE IDENTIFICATION

A. Pipe Identification.
   1. Affix sets of pipe adhesive bands where they can be easily read, with their long dimension parallel to the axis of the pipe and no more than 40 feet apart on a piping system.
B. Valve Tags
   1. Securely fasten valve tags with approved brass chain.

METHOD OF MEASUREMENT

A. Fire Standpipe System Piping and Appurtenances will be measured by Contract unit price per “Lump Sum”, which shall include all labor, materials, equipment, disposal, and incidental costs required to complete the work.

The measurement stated constitutes full and complete compensation for all labor, tools, materials and equipment, staging, accessories, including hardware, nuts, bolts, washers, anchors, pipe, fittings, hangers, valves, fire hose valve cabinets, disposal of all waste and all incidentals required to finish the work, complete in place and accepted by the Engineer.

BASIS OF PAYMENT

A. Fire Standpipe System Piping and Appurtenances will be paid for at Contract unit price per “Lump Sum”, which price shall include all labor, materials, equipment, disposal, and incidental costs required to complete the work.
The price stated constitutes full and complete compensation for all labor, tools, materials and equipment, staging, accessories, including hardware, nuts, bolts, washers, anchors, pipe, fittings, hangers, valves, fire hose valve cabinets, disposal of all waste and all incidentals required to finish the work, complete in place and accepted by the Engineer.

CODE 701.9902
METAL DUCTS

GENERAL

SUMMARY

A. Section Includes:
   1. Single-wall round ducts and fittings.
   2. Sheet metal materials.
   3. Sealants and gaskets.
   4. Hangers and supports.
B. Related Requirements:
   1. Code 701.9903 "Air Duct Accessories" for dampers, sound-control devices, duct-mounting access doors and panels, turning vanes, and flexible ducts.

ACTION SUBMITTALS

A. Product Data: For each type of the following products:
   1. Liners and adhesives.
   2. Sealants and gaskets.
   3. Seismic-restraint devices.
B. Shop Drawings:
   1. Fabrication, assembly, and installation, including plans, elevations, sections, components, and attachments to other work.
   2. Factory- and shop-fabricated ducts and fittings.
   3. Duct layout indicating sizes, configuration, liner material, and static-pressure classes.
   4. Elevation of top and bottom of ducts.
   5. Dimensions of all duct runs from building grid lines.
   6. Fittings.
   7. Reinforcement and spacing.
   8. Seam and joint construction.
   9. Penetrations through fire-rated and other partitions.
   10. Equipment installation based on equipment being used on Project.
   11. Locations for duct accessories, including dampers, turning vanes, and access doors and panels.
   12. Hangers and supports, including methods for duct and building attachment.

INFORMATIONAL SUBMITTALS

A. Coordination Drawings: A single set of plans, drawn to scale, showing the items described in this Section, and coordinated with all building trades.
B. Field quality-control reports.

PRODUCTS

SINGLE-WALL ROUND DUCTS AND FITTINGS

A. General Fabrication Requirements: Comply with SMACNA's "HVAC Duct Construction Standards - Metal and Flexible," Ch. 3, "Round, Oval, and Flexible Duct," based on indicated static-pressure class unless otherwise indicated.
   1. Construct ducts for interior applications of galvanized sheet steel unless otherwise indicated.
B. Source Limitations: Obtain single-wall round ducts and fittings from single manufacturer.

SHEET METAL MATERIALS

A. General Material Requirements: Comply with SMACNA's "HVAC Duct Construction Standards - Metal and Flexible" for acceptable materials, material thicknesses, and duct construction methods unless otherwise indicated. Sheet metal materials are to be free of pitting, seam marks, roller marks, stains, discolorations, and other imperfections.
B. Galvanized Sheet Steel: Comply with ASTM A653/A653M.
   1. Galvanized Coating Designation: G90 (Z275).

SEALANT AND GASKETS

A. General Sealant and Gasket Requirements: Surface-burning characteristics for sealants and gaskets are to be a maximum flame-spread index of 25 and a maximum smoke-developed index of 50 when tested in accordance with UL 723; certified by an NRTL.
B. Two-Part Tape Sealing System:
   1. Tape: Woven cotton fiber impregnated with mineral gypsum and modified acrylic/silicone activator to react exothermically with tape to form hard, durable, airtight seal.
   2. Tape Width: 3 inches (76 mm).
   3. Sealant: Modified styrene acrylic.
   4. Water resistant.
   5. Mold and mildew resistant.
   6. Maximum Static-Pressure Class: 10 inch wg (2500 Pa), positive and negative.
   7. Service: Indoor and outdoor.
   8. Service Temperature: Minus 40 to plus 200 deg F (Minus 40 to plus 93 deg C).
   9. Substrate: Compatible with galvanized sheet steel (bare), stainless steel, or aluminum.
C. Flange Gaskets: Butyl rubber, neoprene, or EPDM polymer with polyisobutylene plasticizer.

HANGERS AND SUPPORTS

A. Hanger Rods for Noncorrosive Environments: Galvanized-steel rods and nuts.
B. Strap and Rod Sizes: Comply with SMACNA's "HVAC Duct Construction Standards - Metal and Flexible," Table 5-1 (Table 5-1M), "Rectangular Duct Hangers Minimum Size," and Table 5-2, "Minimum Hanger Sizes for Round Duct."
C. Steel Cables for Galvanized-Steel Ducts: Galvanized steel complying with ASTM A603.
D. Steel Cable End Connections: Galvanized-steel assemblies with brackets, swivel, and bolts designed for duct hanger service; with an automatic-locking and clamping device.
E. Duct Attachments: Sheet metal screws, blind rivets, or self-tapping metal screws; compatible with duct materials.
F. Trapeze and Riser Supports: Supports for Galvanized-Steel Ducts: Galvanized-steel shapes and plates.

EXECUTION

DUCT INSTALLATION

A. Drawing plans, schematics, and diagrams indicate general location and arrangement of duct system. Indicated duct locations, configurations, and arrangements were used to size ducts and calculate friction loss for air-handling equipment sizing and for other design considerations. Install duct systems as indicated unless deviations to layout are approved on Shop Drawings and coordination drawings.
B. Install ducts in accordance with SMACNA's "HVAC Duct Construction Standards - Metal and Flexible" unless otherwise indicated.

C. Install ducts in maximum practical lengths with fewest possible joints.
D. Install factory- or shop-fabricated fittings for changes in direction, size, and shape and for branch connections.
E. Unless otherwise indicated, install ducts vertically and horizontally, and parallel and perpendicular to building lines.
F. Install ducts close to walls, overhead construction, columns, and other structural and permanent enclosure elements of building.
G. Install ducts with a clearance of 1 inch (25 mm), plus allowance for insulation thickness.
H. Route ducts to avoid passing through transformer vaults and electrical equipment rooms and enclosures.
I. Where ducts pass through non-fire-rated interior partitions and exterior walls and are exposed to view, cover the opening between the partition and duct or duct insulation with sheet metal flanges of same metal thickness as the duct. Overlap openings on four sides by at least 1-1/2 inches (38 mm).
J. Install dampers, and all other duct-mounted accessories in air ducts where indicated on Drawings.
K. Protect duct interiors from moisture, construction debris and dust, and other foreign materials both before and after installation. Comply with SMACNA's "IAQ Guidelines for Occupied Buildings Under Construction," Appendix G, "Duct Cleanliness for New Construction Guidelines."
L. Elbows: Use long-radius elbows wherever they fit.
    1. Fabricate 90-degree round elbows with a minimum of three segments for 12 inches (300 mm) and smaller.

INSTALLATION OF EXPOSED DUCTWORK

A. Protect ducts exposed in finished spaces from being dented, scratched, or damaged.
B. Trim duct sealants flush with metal. Create a smooth and uniform exposed bead. Do not use two-part tape sealing system.
C. Grind welds to provide smooth surface free of burrs, sharp edges, and weld splatter. When welding stainless steel with a No. 3 or 4 finish, grind the welds flush, polish the exposed welds, and treat the welds to remove discoloration caused by welding.
D. Maintain consistency, symmetry, and uniformity in arrangement and fabrication of fittings, hangers and supports, duct accessories, and air outlets.
E. Repair or replace damaged sections and finished work that does not comply with these requirements.

DUCT SEALING

A. Seal ducts at a minimum to the following seal classes in accordance with SMACNA's "HVAC Duct Construction Standards - Metal and Flexible":
    1. Comply with SMACNA's "HVAC Duct Construction Standards - Metal and Flexible."
    2. Outdoor, Supply-Air Ducts: Seal Class A.

HANGER AND SUPPORT INSTALLATION

A. Comply with SMACNA's "HVAC Duct Construction Standards - Metal and Flexible," Chapter 5, "Hangers and Supports."
B. Building Attachments: Concrete inserts, powder-actuated fasteners, or structural-steel fasteners appropriate for construction materials to which hangers are being attached.
    1. Use powder-actuated concrete fasteners for standard-weight aggregate concretes or for slabs more than 4 inches (100 mm) thick.
C. Hanger Spacing: Comply with SMACNA's "HVAC Duct Construction Standards - Metal and Flexible," and Table 5-2, "Minimum Hanger Sizes for Round Duct," for maximum hanger spacing; install hangers and supports within 24 inches (610 mm) of each elbow and within 48 inches (1220 mm) of each branch intersection.

D. Hangers Exposed to View: Threaded rod and angle or channel supports.
E. Install upper attachments to structures. Select and size upper attachments with pull-out, tension, and shear capacities appropriate for supported loads and building materials where used.

DUCTWORK CONNECTIONS

A. Make connections to equipment with flexible connectors complying with Code 701.9903 "Air Duct Accessories."
B. Comply with SMACNA's "HVAC Duct Construction Standards - Metal and Flexible" for branch, outlet and inlet, and terminal unit connections.

STARTUP

A. See notes on mechanical sheet M-01 for startup testing and balancing instructions.

DUCT SCHEDULE

A. Fabricate ducts with galvanized sheet steel except as otherwise indicated and as follows:
   1. Fabricate all ducts to achieve SMACNA pressure class, seal class, and leakage class as indicated below.
   2. Fabricate ducts for interior applications of galvanized sheet steel unless otherwise indicated.
B. Outdoor-Air (Not Filtered, Heated, or Cooled) Ducts:
   1. Ducts Connected to fans:
      a. Pressure Class: Positive or negative 1 (250) inch wg (Pa).
      b. Minimum SMACNA Seal Class: A.
      c. SMACNA Leakage Class for Round and Flat Oval: 8.
C. Elbow Configuration:
   1. Round Duct: Comply with SMACNA's "HVAC Duct Construction Standards - Metal and Flexible," Figure 3-4, "Round Duct Elbows."
      a. Minimum Radius-to-Diameter Ratio and Elbow Segments: Comply with SMACNA's "HVAC Duct Construction Standards - Metal and Flexible," Table 3-1, "Mitered Elbows." Elbows with less than 90-degree change of direction have proportionately fewer segments.
      b. Round Elbows, 12 (305) Inches (mm) and Smaller in Diameter: Stamped or pleated.

METHOD OF MEASUREMENT

A. Metal Ducts will be measured by Contract unit price per “Lump Sum”, which price shall include all labor, materials, equipment, disposal, and incidental costs required to complete the work. The measurement stated constitutes full and complete compensation for all labor, tools, materials, equipment, staging, accessories, including hardware, nuts, bolts, washers, anchors, pipe, fittings, hangers, valves, disposal of all waste and all incidentals required to finish the work, complete in place and accepted by the Engineer.

BASIS OF PAYMENT

A. Metal Ducts will be paid by Contract unit price per “Lump Sum”, which price shall include all labor, materials, equipment, disposal, and incidental costs required to complete the work. The price stated constitutes full and complete compensation for all labor, tools, materials, equipment, staging, accessories, including hardware, nuts, bolts, washers, anchors, pipe, fittings, hangers, valves, disposal of all waste and all incidentals required to finish the work, complete in place and accepted by the Engineer.

CODE 701.9903
AIR DUCT ACCESSORIES

GENERAL

SUMMARY
- A. Section Includes:
  1. Backdraft and pressure relief dampers.
  2. Manual volume dampers.
  3. Duct accessory hardware.

ACTION SUBMITTALS
- A. Product Data: For each type of product.
- B. Shop Drawings: For duct accessories. Include plans, elevations, sections, details, and attachments to other work.
  1. Detail duct accessories' fabrication and installation in ducts and other construction. Include dimensions, weights, loads, and required clearances; and method of field assembly into duct systems and other construction. Include the following:
     - a. Special fittings.
     - b. Manual volume damper installations.
     - c. Ceiling, and corridor-damper installations, including sleeves; and duct-mounted access doors and remote damper operators.

CLOSEOUT SUBMITTALS
- A. Operation and Maintenance Data: For air duct accessories to include in operation and maintenance manuals.

PRODUCTS

PERFORMANCE REQUIREMENTS
- A. Comply with NFPA 90A and NFPA 90B.
- B. Comply with SMACNA's "HVAC Duct Construction Standards - Metal and Flexible" for acceptable materials, material thicknesses, and duct construction methods unless otherwise indicated. Sheet metal materials shall be free of pitting, seam marks, roller marks, stains, discolorations, and other imperfections.

BACKDRAFT AND PRESSURE RELIEF DAMPERS
- A. Description: Gravity balanced.
- B. Performance:
  1. Maximum Air Velocity: 1000 fpm (5.1 m/s).
  2. Maximum System Pressure: 1 inch wg (0.25 kPa).
  3. Leakage:
     - a. Class II: Leakage shall not exceed 10 cfm/sq. ft. (51 L/s per sq. m) against 1-inch wg (250-Pa) differential static pressure.
- C. Construction:
  1. Frame:
     - a. Hat shaped.
     - b. 16-gauge- (1.6-mm-) thick, galvanized sheet steel, with welded or mechanically attached corners and mounting flange.
  2. Blades:
     - a. Multiple single-piece blades.

b. Center pivoted, maximum 6-inch (150-mm) width, 16-gauge- (1.6-mm-) thick, galvanized sheet steel with sealed edges.
3. Blade Action: Parallel.

D. Blade Seals: Felt.
E. Blade Axles:
1. Material: Galvanized steel.
2. Diameter: 0.20 inch (5 mm).

F. Tie Bars and Brackets: Galvanized steel.
G. Return Spring: Adjustable tension.
H. Bearings: Steel ball or Brass sleeve
I. Accessories:
1. Adjustment device to permit setting for varying differential static pressure.
2. 90-degree stops.

MANUAL VOLUME DAMPERS

A. Standard, Steel, Manual Volume Dampers:
1. Performance:
a. Leakage Rating Class III: Leakage not exceeding 40 cfm/sq. ft. (203 L/s per sq. m) against 1-inch wg (250-Pa) differential static pressure.
2. Construction:
a. Linkage out of airstream.
b. Suitable for horizontal or vertical airflow applications.
3. Frames:
a. Hat-shaped, 16-gauge- (1.6-mm-) thick, galvanized sheet steel
b. Mitered and welded corners.
c. Flanges for attaching to walls and flangeless frames for installing in ducts.
4. Blades:
a. Multiple or single blade.
b. Parallel- or opposed-blade design.
c. Stiffen damper blades for stability.
d. Galvanized steel; 16 gauge (1.6 mm) thick.
5. Blade Axles: Galvanized steel.
6. Bearings:
a. Oil-impregnated bronze
b. Dampers mounted with vertical blades to have thrust bearing at each end of every blade.
7. Tie Bars and Brackets: Galvanized steel.
8. Locking device to hold damper blades in a fixed position without vibration.

DUCT ACCESSORY HARDWARE

A. Instrument Test Holes: Cast iron or cast aluminum to suit duct material, including screw cap and gasket. Size to allow insertion of pitot tube and other testing instruments and of length to suit duct-insulation thickness.
B. Adhesives: High strength, quick setting, neoprene based, waterproof, and resistant to gasoline and grease.

MATERIALS

A. Galvanized Sheet Steel: Comply with ASTM A653/A653M.
1. Galvanized Coating Designation: G90 (Z275).
2. Exposed-Surface Finish: Mill phosphatized.

B. Reinforcement Shapes and Plates: Galvanized-steel reinforcement where installed on galvanized sheet metal ducts; compatible materials for aluminum and stainless steel ducts.

C. Tie Rods: Galvanized steel, 1/4-inch (6-mm) minimum diameter for lengths 36 inches (900 mm) or less; 3/8-inch (10-mm) minimum diameter for lengths longer than 36 inches (900 mm).

EXECUTION

INSTALLATION

A. Install duct accessories in accordance with applicable details in SMACNA's "HVAC Duct Construction Standards - Metal and Flexible" for metal ducts and in NAIMA AH116 for fibrous-glass ducts.
B. Install duct accessories of materials suited to duct materials; use galvanized-steel accessories in galvanized-steel and fibrous-glass ducts, stainless steel accessories in stainless steel ducts, and aluminum accessories in aluminum ducts.
C. Set dampers to fully open position before testing, adjusting, and balancing.
D. Install test holes at fan inlets and outlets and elsewhere as indicated and as needed for testing and balancing.
E. Install duct test holes where required for testing and balancing purposes.

FIELD QUALITY CONTROL

A. Tests and Inspections:
    1. Operate dampers to verify full range of movement.

METHOD OF MEASUREMENT

A. Air Duct Accessories will be measured by Contract unit price per “Lump Sum”, which measurement shall include all labor, materials, equipment, disposal, and incidental costs required to complete the work. The measurement stated constitutes full and complete compensation for all labor, tools, materials, equipment, staging, accessories, including hardware, nuts, bolts, washers, anchors, pipe, fittings, hangers, valves, disposal of all waste and all incidentals required to finish the work, complete in place and accepted by the Engineer.

BASIS OF PAYMENT

A. Air Duct Accessories will be paid by Contract unit price per “Lump Sum”, which price shall include all labor, materials, equipment, disposal, and incidental costs required to complete the work. The price stated constitutes full and complete compensation for all labor, tools, materials, equipment, staging, accessories, including hardware, nuts, bolts, washers, anchors, pipe, fittings, hangers, valves, disposal of all waste and all incidentals required to finish the work, complete in place and accepted by the Engineer.

CODE 701.9904
CENTRIFUGAL HVAC FANS

GENERAL

SUMMARY
- A. Section Includes:
  1. Square in-line centrifugal fans.

ACTION SUBMITTALS
- A. Product Data: For each type of product.
- B. Shop Drawings:
  1. Include plans, elevations, sections, and attachment details.
  2. Include details of equipment assemblies. Indicate dimensions, weights, loads, required clearances, method of field assembly, components, and location and size of each field connection.
  3. Include diagrams for power, signal, and control wiring.
  4. Design Calculations: Calculate requirements for selecting vibration isolators and for designing vibration isolation bases.

INFORMATIONAL SUBMITTALS
- A. Coordination Drawings: Fan room layout and relationships between components and adjacent structural and mechanical elements, drawn to scale, and coordinated with each other, using input from installers of the items involved.
- B. Field quality-control reports.

CLOSEOUT SUBMITTALS
- A. Operation and maintenance data.

PRODUCTS

PERFORMANCE REQUIREMENTS
- A. Unusual Service Conditions
  1. Base fan-performance ratings on the following:
     a. Ambient Temperature: 70° F (20° C)
     b. Altitude: 700 ft. (215 m)
     c. Humidity: 50% RH
- B. Electrical Components, Devices, and Accessories: Listed and labeled as defined in NFPA 70, by a qualified testing agency, and marked for intended location and application.
- C. NFPA Compliance: Comply with NFPA 90A for design, fabrication, and installation of unit components.
- D. ASHRAE 62.1 Compliance: Applicable requirements in ASHRAE 62.1, Section 5 - "Systems and Equipment" and Section 7 - "Construction and Startup."
- E. ASHRAE/IES 90.1 Compliance: Applicable requirements in ASHRAE/IES 90.1, Section 6 - "Heating, Ventilating, and Air-Conditioning."
- F. Capacities and Characteristics:
  1. See sheets for scheduled equipment capacities and characteristics.

SQUARE IN-LINE CENTRIFUGAL FANS

A. Subject to compliance with requirements, available manufacturers offering products that may be incorporated into the Work include, but are not limited to, the following:
   1. Greenheck
   2. Loren Cook
   3. Aerovent
   4. Manufacturer approved by engineer.
B. Description: Square in-line centrifugal fans.
C. Housing:
   1. Housing Material: See schedule.
   2. Housing Coating: See schedule.
   3. Housing Construction: Side panels shall be easily removable for service. Include inlet and outlet flanges, and support bracket adaptable to floor, side wall, or ceiling mounting.
D. Direct-Drive Units: Motor mounted in airstream, factory wired to disconnect switch located on outside of fan housing.
E. Fan Wheels: Aluminum airfoil blades welded to aluminum hub.
F. Motor Enclosure: Totally enclosed fan cooled
G. Accessories:
   1. Access for Inspection, Cleaning, and Maintenance: Comply with requirements in ASHRAE 62.1.
   2. Variable-Speed Controller: Solid-state control to reduce speed from 100 to less than 50 percent.
   3. Companion Flanges: For inlet and outlet duct connections.
   4. Fan Guards: 1/2- by 1-inch (13- by 25-mm) mesh of galvanized steel in removable frame. Provide guard for inlet or outlet for units not connected to ductwork.

MOTORS

A. Comply with NEMA designation, temperature rating, service factor, and efficiency requirements for motors.
B. Where variable-frequency drives are indicated or scheduled, provide fan motor compatible with variable-frequency drive.

SOURCE QUALITY CONTROL

A. AMCA Certification for Fan Sound Performance Rating: Test, rate, and label in accordance with AMCA 311.
B. AMCA Certification for Fan Aerodynamic Performance Ratings: Test, rate, and label in accordance with AMCA 211.
C. AMCA Certification for Fan Energy Index (FEI): Test, rate, and label in accordance with AMCA 211.
D. Operating Limits: Classify fans in accordance with AMCA 99, Section 14.

EXECUTION

INSTALLATION, GENERAL

A. Install centrifugal fans level and plumb.
B. Disassemble and reassemble units, as required for moving to the final location, according to manufacturer's written instructions.
C. Lift and support units with manufacturer's designated lifting or supporting points.
D. Equipment Mounting:

1. Support duct-mounted and other hanging centrifugal fans directly from the building structure using suitable hanging systems.
2. Unit Support: Coordinate with duct connections. Coordinate wall penetrations and flashing with wall construction and secure units to structural support with anchor bolts.
3. Install units with clearances for service and maintenance.

DUCTWORK CONNECTIONS

A. Drawings indicate general arrangement of ducts and duct accessories. Make final duct connections with flexible connectors. Flexible connectors are specified in Code 701.9903 "Air Duct Accessories."
B. Install ducts adjacent to fans to allow service and maintenance.

ELECTRICAL CONNECTIONS

A. Refer to Part T – “Traffic control systems” for all electrical low voltage electrical power conductors, cables, grounding and bonding systems and electrical identification.
B. Install electrical devices furnished by manufacturer, but not factory mounted, according to NFPA 70 and NECA 1.

CONTROL CONNECTIONS

A. Install control and electrical power wiring to field-mounted control devices.

STARTUP SERVICE:

A. Perform startup service.
   1. Complete installation and startup checks in accordance with manufacturer's written instructions.
   2. Verify that shipping, blocking, and bracing are removed.
   3. Verify that unit is secure on mountings and supporting devices and that connections to ducts and electrical components are complete. Verify that proper thermal-overload protection is installed in motors, starters, and disconnect switches.
   4. Verify that cleaning and adjusting are complete.
   5. For direct-drive fans, verify proper motor rotation direction and verify fan wheel free rotation and smooth bearing operation.
   6. Adjust damper linkages for proper damper operation.
   7. Verify lubrication for bearings and other moving parts.
   8. Verify that manual volume control dampers in connected ductwork systems are in fully open position.
   9. Disable automatic temperature-control operators, energize motor and confirm proper motor rotation and unit operation, adjust fan to indicated rpm, and measure and record motor voltage and amperage.
   10. Shut unit down and reconnect automatic temperature-control operators.
   11. Remove and replace malfunctioning units and retest as specified above.

ADJUSTING

A. Adjust damper linkages for proper damper operation.
B. Lubricate bearings.
C. See notes on mechanical sheet M-01 for startup testing and balancing instructions

CLEANING

A. After completing system installation and testing, adjusting, and balancing and after completing startup service, clean fans internally to remove foreign material and construction dirt and dust.

FIELD QUALITY CONTROL

A. Testing Agency: Owner will engage a qualified testing agency to perform tests and inspections.

B. Perform tests and inspections.
   1. Fan Operational Test: After electrical circuitry has been energized, start units to confirm proper motor rotation and unit operation.
   2. Test and adjust controls and safeties. Replace damaged and malfunctioning controls and equipment.
   3. Fans and components will be considered defective if they do not pass tests and inspections.
C. Prepare test and inspection reports.

DEMONSTRATION

A. Train Owner's maintenance personnel to adjust, operate, and maintain centrifugal fans.

METHOD OF MEASUREMENT

A. Centrifugal HVAC Fans will be measured by Contract unit price per “Lump Sum”, which measurement shall include all labor, materials, equipment, disposal, and incidental costs required to complete the work. The measurement stated constitutes full and complete compensation for all labor, tools, materials, equipment, staging, accessories, including hardware, nuts, bolts, washers, anchors, pipe, fittings, hangers, valves, disposal of all waste and all incidentals required to finish the work, complete in place and accepted by the Engineer.

BASIS OF PAYMENT

A. Centrifugal HVAC Fans will be paid by Contract unit price per “Lump Sum”, which price shall include all labor, materials, equipment, disposal, and incidental costs required to complete the work. The price stated constitutes full and complete compensation for all labor, tools, materials, equipment, staging, accessories, including hardware, nuts, bolts, washers, anchors, pipe, fittings, hangers, valves, disposal of all waste and all incidentals required to finish the work, complete in place and accepted by the Engineer.

CODE 701.9905
UNIT HEATERS

GENERAL

SUMMARY
A. Section includes wall and ceiling heaters with propeller fans and electric-resistance heating coils.

ACTION SUBMITTALS
A. Product Data: For each type of product.
   1. Include rated capacities, operating characteristics, furnished specialties, and accessories.
B. Shop Drawings:
   1. Include plans, elevations, sections, and details.
   2. Include details of equipment assemblies. Indicate dimensions, weights, loads, required clearances, method of field assembly, components, and location and size of each field connection.
   3. Include details of anchorages and attachments to structure and to supported equipment.
   4. Include equipment schedules to indicate rated capacities, operating characteristics, furnished specialties, and accessories.
   5. Wiring Diagrams: Power, signal, and control wiring.

CLOSEOUT SUBMITTALS
A. Operation and Maintenance Data: For wall and ceiling unit heaters to include in emergency, operation, and maintenance manuals.

PRODUCTS

MANUFACTURERS
A. Subject to compliance with requirements, available manufacturers offering products that may be incorporated into the Work include, but are not limited to, the following:
   1. QMark.
   2. Berko.
   3. Chromalox, Inc.
   4. Indeeco.
   5. Markel Products Company.

DESCRIPTION
A. Assembly including chassis, electric heating coil, fan, motor, and controls. Comply with UL 2021.
B. Electrical Components, Devices, and Accessories: Listed and labeled as defined in NFPA 70, by a qualified testing agency, and marked for intended location and application.

CABINET
A. Front Panel: Stamped-steel louver or Extruded-aluminum bar grille, with removable panels fastened with tamperproof fasteners.

B. Finish: Baked enamel over baked-on primer with manufacturer's standard color applied to factory-assembled and -tested wall and ceiling heaters before shipping.
C. Airstream Surfaces: Surfaces in contact with the airstream shall comply with requirements in ASHRAE 62.1.

COIL

A. Electric-Resistance Heating Coil: Nickel-chromium heating wire, free from expansion noise and 60-Hz hum, embedded in magnesium oxide refractory and sealed in corrosion-resistant metallic sheath. Terminate elements in stainless-steel, machine-staked terminals secured with stainless-steel hardware, and limit controls for high-temperature protection. Provide integral circuit breaker for overcurrent protection.

FAN AND MOTOR

A. Fan: Aluminum propeller directly connected to motor.
B. Motor: Permanently lubricated.

CONTROLS

A. Controls: Unit-mounted thermostat.
B. Electrical Connection: Factory wire motors and controls for a single field connection with disconnect switch.

CAPACITIES AND CHARACTERISTICS

A. Airflow: 650 (307) cfm (L/s).
B. Heating Coil: 10 kilowatts.
C. Electrical Characteristics for Single-Point Connection:
    1. Volts: 208.
    2. Phase: 3.
    3. Hertz: 60.

EXECUTION

EXAMINATION

A. Examine areas to receive wall and ceiling unit heaters for compliance with requirements for installation tolerances and other conditions affecting performance of the Work.
B. Examine roughing-in for electrical connections to verify actual locations before unit-heater installation.
C. Proceed with installation only after unsatisfactory conditions have been corrected.

INSTALLATION

A. Install wall and ceiling unit heaters to comply with NFPA 90A.
B. Install wall and ceiling unit heaters level and plumb.
C. Ground equipment according to Part T – “Traffic control systems.”
D. Connect wiring according to Part T – “Traffic control systems.”

METHOD OF MEASUREMENT

A. Unit heaters will be measured by Contract unit price per “Lump Sum”, which measurement shall include all labor, materials, equipment, disposal, and incidental costs required to complete the work. The measurement stated constitutes full and complete compensation for all labor, tools, materials, equipment, staging, accessories, including hardware, nuts, bolts, washers, anchors, pipe, fittings, hangers, valves, disposal of all waste and all incidentals required to finish the work, complete in place and accepted by the Engineer.

BASIS OF PAYMENT

A. Unit heaters will be paid by Contract unit price per “Lump Sum”, which price shall include all labor, materials, equipment, disposal, and incidental costs required to complete the work. The price stated constitutes full and complete compensation for all labor, tools, materials, equipment, staging, accessories, including hardware, nuts, bolts, washers, anchors, pipe, fittings, hangers, valves, disposal of all waste and all incidentals required to finish the work, complete in place and accepted by the Engineer.

CODE 701.9906
MODULAR SEAL SYSTEM FOR CONNECTION TO EXISTING WALL DRAINS

701.9906.01 GENERAL. This specification covers the furnishing and installation of modular link seals used for connecting proposed external drain pipes to existing wall drains as detailed in project plans.

701.9906.02 PRODUCTS.

Manufacturers: Subject to compliance with requirements, provide products by one of the following:

1. Westatlantic Tech Corp.
2. Pipeline Seal and Insulator, Inc.
3. Advance Products & Systems, Inc.
4. CALPICO, Inc.
5. Metraflex Company (The).

Description: Modular seal system, designed for field assembly, for filling annular space between piping and sleeve or cored hole.

1. Sealing Elements: EPDM-rubber or NBR interlocking links shaped to fit surface of pipe.
   Include type and number required for pipe material and size of pipe.
2. Pressure Plates: 316 stainless steel.
3. Connecting Bolts and Nuts: 316 stainless steel of length required to secure pressure plates to sealing elements.

701.9906.03 INSTALLATION.

1. Install modular seal systems within holes cored into tunnel walls at the locations of existing wall drains, as shown on plans.

2. Select type, size, and number of sealing elements required for piping material and size and for hole size. Position piping in center of sleeve. Center piping in penetration, assemble modular seal system components, and install in annular space between piping and cored hole. Tighten bolts against pressure plates that cause sealing elements to expand and make a watertight seal.

701.9906.04 METHOD OF MEASUREMENT. "MODULAR SEAL SYSTEM FOR CONNECTION TO EXISTING WALL DRAINS" shall be measured by the number of each such unit actually furnished and installed in accordance with the Plans and/or as directed by the Engineer.

701.9906.05 BASIS OF PAYMENT. The accepted quantity of "MODULAR SEAL SYSTEM FOR CONNECTION TO EXISTING WALL DRAINS" will be paid for at their respective contract unit prices per each as listed in the Proposal. The prices so-stated shall constitute full and complete compensation for all labor, tools, materials and equipment, including protection of newly applied markings from traffic, layout, cleaning and sweeping, furnishing and applying the pavement markings, and all incidentals required to finish the work, complete in place and accepted by the Engineer.

CODE 703.9901
12 INCH POLYMER COATED CORRUGATED STEEL PIPE

703.9901.01 GENERAL. This specification covers the furnishing and installation of the polymer coated corrugated steel pipe or pipe-arch (CSP) detailed in the project plans.

703.9901.02 DESIGN STANDARDS. The CSP shall meet the design parameters of the American Association of State Highway and Transportation Officials (AASHTO) Standard Specification for Highway Bridges, AASHTO LRFD Bridge Design, and/or the American Iron and Steel Institute (AISI).

703.9901.03 MATERIAL. The polymer coated steel coils shall conform to the applicable requirements of AASHTO M 246 or ASTM A742.

703.9901.04 PIPE. The CSP shall be manufactured in accordance with the applicable requirements of AASHTO M 245 or ASTM A762. The pipe sizes shall be as shown on the project plans. Pipe shall be 14 gage galvanized steel and corrugations shall be 2-2/3” x 1/2". All fabrication of the product shall occur within the United States.

703.9901.05 COUPLING BANDS. Coupling bands for the CSP shall be made of the same base metal and coatings as the CSP to a minimum of 18 gauge. Ends of the CSP are rerolled with annular corrugations for proper indexing. Connection fasteners will be provided.

703.9901.06 HANDLING & ASSEMBLY. Refer to the recommendations of the National Corrugated Steel Pipe Association’s (NCSPA).

703.9901.07 INSTALLATION. The installation shall be in accordance with AASHTO Standard Specifications for Highway Bridges, LRFD Section 26, Division II, NCSPA, or ASTM A798 and in conformance with the project plans and specifications. If there are any inconsistencies or conflicts, the contractor must bring them to the attention of the project engineer. It is always the contractor’s responsibility to follow OSHA guidelines for safe practices.

703.9901.08 CONSTRUCTION LOADS. Construction loads may be greater than design loads. The contractor shall follow the recommendations for additional compacted material per manufacturer's or NCSPA guidelines.

703.9901.09 METHOD OF MEASUREMENT. "12 INCH POLYMER COATED CORRUGATED STEEL PIPE" will be measured by the number of linear feet (excluding skips and spaces) actually installed or removed, as the case may be, in accordance with the Plans and/or as directed by the Engineer.

703.9901.10 BASIS OF PAYMENT. The accepted quantity of "12 INCH POLYMER COATED CORRUGATED STEEL PIPE" will be paid for at their respective contract unit prices per linear foot as listed in the Proposal. The prices so-stated shall constitute full and complete compensation for all labor, tools, materials and equipment, including protection of newly applied markings from traffic, layout, cleaning and sweeping, furnishing and applying the pavement markings, and all incidentals required to finish the work, complete in place and accepted by the Engineer.

CODE 703.9902
12 INCH SLOTTED DRAIN PIPE – 6 INCH GRATE (CORRUGATED STEEL PIPE)

703.9902.01 GENERAL. This specification covers the furnishing and installation of galvanized corrugated steel pipe (CSP) with Slotted Drain used for the removal of surface water as detailed in the project plans.

703.9902.02 DESIGN STANDARDS. The CSP meets the design parameters of the American Association of State Highway and Transportation Officials (AASHTO) Standard Specification for Highway Bridges, AASHTO LRFD Bridge Design, and/or the American Iron and Steel Institute (AISI).

703.9902.03 MATERIAL. The galvanized coils shall conform to the applicable requirements of AASHTO M 218 or ASTM A929. The grate shall be galvanized in accordance with ASTM A123, except with a 2 oz. galvanized coating, total both sides.

703.9902.04 PIPE. The CSP shall be manufactured in accordance with the applicable requirements of AASHTO M 36 or ASTM A760. The pipe sizes shall be as shown on the project plans. Pipe shall be 14 gage galvanized steel and corrugations shall be 2-2/3” x 1/2". All fabrication of the product shall occur within the United States.

703.9902.05 GRATES.

a) The grates shall be manufactured from ASTM A1011, Grade 36 steel. The spacers and bearing bars (sides) shall be 3/16" material ± 0.008".
b) The spacers shall be on 6" centers and welded on both sides to each bearing bar (sides) with four (4) 1-1/4" long 3/16" fillet welds on each side of the bearing bar.
    1. The engineer may call for tensile strength tests on the grate if the grate is not in compliance with section b. If tensile strength tests are called for, minimum results for an in-place spacer pulled perpendicular to the bearing bar shall be T = 15,000 pounds for 6" grate
c) The grates shall have a 1-3/4" opening in the top and be 6" high as shown on the plans. Vertical (straight sides) grate with a 1-3/4" opening in the top and vertical spacers unless shown otherwise on the plans. The grate shall be 6" high as shown on the plans.
d) The grate shall be fillet welded with a minimum weld 1" long to the CSP on each side of the grate at every other corrugation.

703.9902.06 COUPLING BANDS.

a) Modified HUGGER (7-5/8” wide) bands for the CSP shall be made of the same base metal and coatings as the CSP to a minimum of 18 gauge.
b) When the Slotted Drain is banded together, the adjacent grates shall have a typical gap of 2”-3".
c) Ends of the CSP are rerolled with annular corrugations for proper indexing.
d) Connection fasteners will be provided.

703.9902.07 TOLERANCES FOR FINISHED SLOTTED DRAIN OF 20' LENGTHS.

a) Vertical Bow: ± 3/8"
b) Horizontal Bow: ± 5/8"
c) Twist: ± 1/2"

703.9902.08 HANDLING, ASSEMBLY, & INSTALLATION. Refer to the recommendations of the National Corrugated Steel Pipe Association's (NCSPA). The installation shall be in conformance with the project plans and specifications or the manufacturer's recommendations. If there are any inconsistencies or conflicts, the contractor must bring them to the attention of the project engineer. It is always the contractor's responsibility to follow OSHA guidelines for safe practices.

703.9902.09 CONSTRUCTION LOADS. Construction loads may be greater than design loads. The contractor shall follow the of the manufacturer's guidelines.

703.9902.10 METHOD OF MEASUREMENT. "12 INCH SLOTTED DRAIN PIPE – 6 INCH GRATE (CORRUGATED STEEL PIPE)" will be measured by the number of linear feet (excluding skips and spaces) actually installed, in accordance with the Plans and/or as directed by the Engineer.

703.9902.11 BASIS OF PAYMENT. The accepted quantity of "12 INCH SLOTTED DRAIN PIPE – 6 INCH GRATE (CORRUGATED STEEL PIPE)" will be paid for at their respective contract unit prices per linear foot as listed in the Proposal. The prices so-stated shall constitute full and complete compensation for all labor, tools, materials and equipment, including protection of newly applied markings from traffic, layout, cleaning and sweeping, furnishing and applying the pavement markings, and all incidentals required to finish the work, complete in place and accepted by the Engineer.

CODE 703.9903
12 INCH FABRICATED CLEAN-OUT TEE (CORRUGATED STEEL PIPE)

703.9903.01 GENERAL. This specification covers the furnishing and installation of the polymer coated corrugated steel pipe fabricated fittings detailed in the project plans.

703.9903.02 DESIGN STANDARDS. The CSP meets the design parameters of the American Association of State Highway and Transportation Officials (AASHTO) Standard Specification for Highway Bridges, AASHTO LRFD Bridge Design, and/or the American Iron and Steel Institute (AISI).

703.9903.03 MATERIAL. The polymer coated steel coils shall conform to the applicable requirements of AASHTO M 246 or ASTM A742.

703.9903.04 PIPE. The CSP shall be manufactured in accordance with the applicable requirements of AASHTO M 245 or ASTM A762. The pipe sizes shall be as shown on the project plans. Pipe shall be 14 gage galvanized steel and corrugations shall be 2 2/3” x 1/2". All fabrication of the product shall occur within the United States.

703.9903.05 COUPLING BANDS. Coupling bands for the CSP fittings shall be made of the same base metal and coatings as the CSP to a minimum of 18 gauge. Ends of the CSP are rerolled with annular corrugations for proper indexing. Connection fasteners will be provided.

703.9903.06 HANDLING & ASSEMBLY. Refer to the recommendations of the National Corrugated Steel Pipe Association’s (NCSPA).

703.9903.07 INSTALLATION. The installation shall be in accordance with AASHTO Standard Specifications for Highway Bridges, LRFD Section 26, Division II, NCSPA, or ASTM A798 and in conformance with the project plans and specifications. If there are any inconsistencies or conflicts, the contractor must bring them to the attention of the project engineer. It is always the contractor’s responsibility to follow OSHA guidelines for safe practices.

703.9903.08 CONSTRUCTION LOADS. Construction loads may be greater than design loads. The contractor shall follow the recommendations for additional compacted material per manufacturer's or NCSPA guidelines.

703.9903.09 METHOD OF MEASUREMENT. "12 INCH FABRICATED CLEAN-OUT TEE (CORRUGATED STEEL PIPE)" shall be measured by the number of each such unit actually furnished and installed in accordance with the Plans and/or as directed by the Engineer.

703.9903.10 BASIS OF PAYMENT. The accepted quantity of "12 INCH FABRICATED CLEAN-OUT TEE (CORRUGATED STEEL PIPE)" will be paid for at their respective contract unit prices per each as listed in the Proposal. The prices so-stated shall constitute full and complete compensation for all labor, tools, materials and equipment, including protection of newly applied markings from traffic, layout, cleaning and sweeping, furnishing and applying the pavement markings, and all incidentals required to finish the work, complete in place and accepted by the Engineer.

CODE 703.9904
12 INCH X 6 INCH FABRICATED WYE (CORRUGATED STEEL PIPE)

703.9904.01 GENERAL. This specification covers the furnishing and installation of the polymer coated corrugated steel pipe fabricated fittings detailed in the project plans.

703.9904.02 DESIGN STANDARDS. The CSP meets the design parameters of the American Association of State Highway and Transportation Officials (AASHTO) Standard Specification for Highway Bridges, AASHTO LRFD Bridge Design, and/or the American Iron and Steel Institute (AISI).

703.9904.03 MATERIAL. The polymer coated steel coils shall conform to the applicable requirements of AASHTO M 246 or ASTM A742.

703.9904.04 PIPE. The CSP shall be manufactured in accordance with the applicable requirements of AASHTO M 245 or ASTM A762. The pipe sizes shall be as shown on the project plans. Pipe shall be 14 gage galvanized steel and corrugations shall be 2 2/3” x 1/2". All fabrication of the product shall occur within the United States. Fittings detailed in the project plans shall be manufactured from the same material as detailed in Section 703.9901.

703.9904.05 COUPLING BANDS. Coupling bands for the CSP fittings shall be made of the same base metal and coatings as the CSP to a minimum of 18 gauge. Ends of the CSP are rerolled with annular corrugations for proper indexing. Connection fasteners will be provided.

703.9904.06 HANDLING & ASSEMBLY. Refer to the recommendations of the National Corrugated Steel Pipe Association’s (NCSPA).

703.9904.07 INSTALLATION. The installation shall be in accordance with AASHTO Standard Specifications for Highway Bridges, LRFD Section 26, Division II, NCSPA, or ASTM A798 and in conformance with the project plans and specifications. If there are any inconsistencies or conflicts, the contractor must bring them to the attention of the project engineer. It is always the contractor’s responsibility to follow OSHA guidelines for safe practices.

703.9904.08 CONSTRUCTION LOADS. Construction loads may be greater than design loads. The contractor shall follow the recommendations for additional compacted material per manufacturer's or NCSPA guidelines.

703.9904.09 METHOD OF MEASUREMENT. "12 INCH X 6 INCH FABRICATED WYE (CORRUGATED STEEL PIPE)" shall be measured by the number of each such unit actually furnished and installed in accordance with the Plans and/or as directed by the Engineer.

703.9904.10 BASIS OF PAYMENT. The accepted quantity of "12 INCH X 6 INCH FABRICATED WYE (CORRUGATED STEEL PIPE)" will be paid for at their respective contract unit prices per each as listed in the Proposal. The prices so-stated shall constitute full and complete compensation for all labor, tools, materials and equipment, including protection of newly applied markings from traffic, layout, cleaning and sweeping, furnishing and applying the pavement markings, and all incidentals required to finish the work, complete in place and accepted by the Engineer.

CODE 703.9905
CELLULAR GLASS INSULATION FOR DUCTILE IRON PIPE - 1 INCH THICK

703.9905.01 GENERAL. This specification covers the furnishing and installation of cellular glass insulation for horizontal ductile iron drainage pipe detailed in the project plans.

Action Submittals

A. Product Data: For each type of product indicated. Include thermal conductivity, water-vapor permeance thickness, and jackets (both factory and field applied if any).
B. Shop Drawings: Include plans, elevations, sections, details, and attachments to other work.
    a. Detail application of protective shields, saddles, and inserts at hangers for each type of insulation and hanger.
    b. Detail attachment and covering of heat tracing inside insulation.
    c. Detail insulation application at pipe expansion joints for each type of insulation.
    d. Detail insulation application at elbows, fittings, flanges, valves, and specialties for each type of insulation.
    e. Detail removable insulation at piping specialties.
    f. Detail application of field-applied jackets.
    g. Detail application at linkages of control devices.
C. Samples: For each type of insulation and jacket indicated. Identify each Sample, describing product and intended use.
    a. Preformed Pipe Insulation Materials: 12 inches (300 mm) long by NPS 2 (DN 50).
    b. Jacket Materials for Pipe: 12 inches (300 mm) long by NPS 2 (DN 50).
    c. Manufacturer's Color Charts: For products where color is specified, show the full range of colors available for each type of finish material.

Informational Submittals

A. Qualification Data: For qualified Installer.

B. Material Test Reports: From a qualified testing agency acceptable to authorities having jurisdiction indicating, interpreting, and certifying test results for compliance of insulation materials, sealers, attachments, cements, and jackets, with requirements indicated. Include dates of tests and test methods employed.

C. Field quality-control reports.

Quality Assurance

A. Installer Qualifications: Skilled mechanics who have successfully completed an apprenticeship program or another craft training program certified by the Department of Labor, Bureau of Apprenticeship and Training.

B. Surface-Burning Characteristics: For insulation and related materials, as determined by testing identical products according to ASTM E 84, by a testing and inspecting agency acceptable to authorities having jurisdiction. Factory label insulation and jacket materials

and adhesive, mastic, tapes, and cement material containers, with appropriate markings of applicable testing agency.

a. Insulation Installed Indoors: Flame-spread index of 25 or less, and smoke-developed index of 50 or less.

C. Mockups: Before installing insulation, build mockups for each type of insulation and finish listed below to demonstrate quality of insulation application and finishes. Build mockups in the location indicated or, if not indicated, as directed by Architect. Use materials indicated for the completed Work.
Piping Mockups:
   a. One 10-foot (3-m) section of NPS 2 (DN 50) straight pipe.
   b. One each of a 90-degree threaded, welded, and flanged elbow.
   c. One each of a threaded, welded, and flanged tee fitting.
   d. One NPS 2 (DN 50) or smaller valve, and one NPS 2-1/2 (DN 65) or larger valve.
   e. Four support hangers including hanger shield and insert.
   f. One threaded strainer and one flanged strainer with removable portion of insulation.
   g. One threaded reducer and one welded reducer.
   h. One pressure temperature tap.
   i. One mechanical coupling.
      i. For each mockup, fabricate cutaway sections to allow observation of application details for insulation materials, adhesives, mastics, attachments, and jackets.
      ii. Notify Engineer seven days in advance of dates and times when mockups will be constructed.
      iii. Obtain Engineer's approval of mockups before starting insulation application.
      iv. Approval of mockups does not constitute approval of deviations from the Contract Documents contained in mockups unless Architect specifically approves such deviations in writing.
      v. Maintain mockups during construction in an undisturbed condition as a standard for judging the completed Work.
      vi. Demolish and remove mockups when directed.

Delivery, Storage and Handling

A. Packaging: Insulation material containers shall be marked by manufacturer with appropriate ASTM standard designation, type and grade, and maximum use temperature.

703.9905.02 MATERIAL.

A. Insulation Material:

   a. Cellular Glass: Inorganic, incombustible, foamed or cellulated glass with annealed, rigid, hermetically sealed cells. Factory-applied jacket requirements are specified in "Factory-Applied Jackets" Article.

i. <Double click here to find, evaluate, and insert list of manufacturers and products.>
ii. Special-Shaped Insulation: ASTM C 552, Type III.
iii. Preformed Pipe Insulation without Jacket: Comply with ASTM C 552, Type II, Class 1.
iv. Preformed Pipe Insulation with Factory-Applied [ASJ] [ASJ-SSL]: Comply with ASTM C 552, Type II, Class 2.
v. Factory fabricate shapes according to ASTM C 450 and ASTM C 585.

B. Adhesives
   a. Cellular-Glass Adhesive: Two-component, thermosetting urethane adhesive containing no flammable solvents, with a service temperature range of minus 100 to plus 200 deg F (minus 73 to plus 93 deg C).

C. Sealants
   a. Cellular-Glass Joint Sealants

D. Securements
   a. Bands: Stainless Steel: ASTM A 167 or ASTM A 240/A 240M, [Type 316]; 0.015 inch (0.38 mm) thick, 3/4 inch wide with closed seal.

703.9905.03 INSTALLATION.

A. Examination
   a. Examine substrates and conditions for compliance with requirements for installation tolerances and other conditions affecting performance of insulation application.
      i. Verify that systems to be insulated have been tested and are free of defects.
      ii. Verify that surfaces to be insulated are clean and dry.
      iii. Proceed with installation only after unsatisfactory conditions have been corrected.
B. Preparation
   a. Surface Preparation: Clean and dry surfaces to receive insulation. Remove materials that will adversely affect insulation application.
   b. Surface Preparation: Clean and prepare surfaces to be insulated. Before insulating, apply a corrosion coating to insulated surfaces as follows:
   c. Stainless Steel: Coat 300 series stainless steel with an epoxy primer 5 mils (0.127 mm) thick and an epoxy finish 5 mils (0.127 mm) thick if operating in a temperature range between 140 and 300 deg F (60 and 149 deg C). Consult coating manufacturer for appropriate coating materials and application methods for operating temperature range.
   d. Carbon Steel: Coat carbon steel operating at a service temperature between 32 and 300 deg F (0 and 149 deg C) with an epoxy coating. Consult coating manufacturer for appropriate coating materials and application methods for operating temperature range.

e. Coordinate insulation installation with the trade installing heat tracing. Comply with requirements for heat tracing that apply to insulation.
f. Mix insulating cements with clean potable water; if insulating cements are to be in contact with stainless-steel surfaces, use demineralized water.

C. General Installation Requirements

a. Install insulation materials, accessories, and finishes with smooth, straight, and even surfaces; free of voids throughout the length of piping including fittings, valves, and specialties.
b. Install insulation materials, forms, vapor barriers or retarders, jackets, and thicknesses required for each item of pipe system as specified in insulation system schedules.
c. Install accessories compatible with insulation materials and suitable for the service. Install accessories that do not corrode, soften, or otherwise attack insulation or jacket in either wet or dry state.
d. Install insulation with longitudinal seams at top and bottom of horizontal runs.
e. Install multiple layers of insulation with longitudinal and end seams staggered.
f. Do not weld brackets, clips, or other attachment devices to piping, fittings, and specialties.
g. Keep insulation materials dry during application and finishing.
h. Install insulation with tight longitudinal seams and end joints. Bond seams and joints with adhesive recommended by insulation material manufacturer.
i. Install insulation with least number of joints practical.
j. Where vapor barrier is indicated, seal joints, seams, and penetrations in insulation at hangers, supports, anchors, and other projections with vapor-barrier mastic.
    i. Install insulation continuously through hangers and around anchor attachments.
    ii. For insulation application where vapor barriers are indicated, extend insulation on anchor legs from point of attachment to supported item to point of attachment to structure. Taper and seal ends at attachment to structure with vapor-barrier mastic.
k. Install insert materials and install insulation to tightly join the insert. Seal insulation to insulation inserts with adhesive or sealing compound recommended by insulation material manufacturer.
l. Cover inserts with jacket material matching adjacent pipe insulation. Install shields over jacket, arranged to protect jacket from tear or puncture by hanger, support, and shield.
m. Apply adhesives, mastics, and sealants at manufacturer's recommended coverage rate and wet and dry film thicknesses.
n. Install insulation with factory-applied jackets as follows:
    i. Draw jacket tight and smooth.
    ii. Cover circumferential joints with 3-inch- wide strips, of same material as insulation jacket. Secure strips with adhesive and outward clinching staples along both edges of strip, spaced 4 inches o.c.

iii. Overlap jacket longitudinal seams at least 1-1/2 inches. Install insulation with longitudinal seams at bottom of pipe. Clean and dry surface to receive self-sealing lap. Staple laps with outward clinching staples along edge at [2 inches] [4 inches] o.c.
iv. For below-ambient services, apply vapor-barrier mastic over staples.
v. Cover joints and seams with tape, according to insulation material manufacturer's written instructions, to maintain vapor seal.
vi. Where vapor barriers are indicated, apply vapor-barrier mastic on seams and joints and at ends adjacent to pipe flanges and fittings.

o. Cut insulation in a manner to avoid compressing insulation more than 75 percent of its nominal thickness.
p. Finish installation with systems at operating conditions. Repair joint separations and cracking due to thermal movement.
q. Repair damaged insulation facings by applying same facing material over damaged areas. Extend patches at least 4 inches beyond damaged areas. Adhere, staple, and seal patches similar to butt joints.

D. General Pipe Insulation Installation

a. Insulation Installation on Fittings, Valves, Strainers, Flanges, and Unions:

1. Install insulation over fittings, valves, strainers, flanges, unions, and other specialties with continuous thermal and vapor-retarder integrity unless otherwise indicated.

2. Insulate pipe elbows using preformed fitting insulation or mitered fittings made from same material and density as adjacent pipe insulation. Each piece shall be butted tightly against adjoining piece and bonded with adhesive. Fill joints, seams, voids, and irregular surfaces with insulating cement finished to a smooth, hard, and uniform contour that is uniform with adjoining pipe insulation.

3. Insulate tee fittings with preformed fitting insulation or sectional pipe insulation of same material and thickness as used for adjacent pipe. Cut sectional pipe insulation to fit. Butt each section closely to the next and hold in place with tie wire. Bond pieces with adhesive.

4. Insulate flanges and unions using a section of oversized preformed pipe insulation. Overlap adjoining pipe insulation by not less than two times the thickness of pipe insulation, or one pipe diameter, whichever is thicker.

5. Cover segmented insulated surfaces with a layer of finishing cement and coat with a mastic. Install vapor-barrier mastic for below-ambient services and a breather mastic for above-ambient services. Reinforce the mastic with fabric-reinforcing mesh. Trowel the mastic to a smooth and well-shaped contour.

E. Installation of Cellular Glass Insulation

a. Insulation Installation on Straight Pipes:
   i. Secure each layer of insulation to pipe with wire or bands and tighten bands without deforming insulation materials.
   ii. Where vapor barriers are indicated, seal longitudinal seams, end joints, and protrusions with vapor-barrier mastic and joint sealant.
   iii. For insulation with factory-applied jackets on above-ambient services, secure laps with outward-clinched staples at 6 inches o.c.
   iv. For insulation with factory-applied jackets on below-ambient services, do not staple longitudinal tabs. Instead, secure tabs with additional adhesive as recommended by insulation material manufacturer and seal with vapor-barrier mastic and flashing sealant.
b. Insulation Installation on Pipe Flanges:
   i. Install preformed pipe insulation to outer diameter of pipe flange.
   ii. Make width of insulation section same as overall width of flange and bolts, plus twice the thickness of pipe insulation.
   iii. Fill voids between inner circumference of flange insulation and outer circumference of adjacent straight pipe segments with cut sections of cellular-glass block insulation of same thickness as pipe insulation.
   iv. Install jacket material with manufacturer's recommended adhesive, overlap seams at least 1 inch, and seal joints with flashing sealant.
c. Insulation Installation on Pipe Fittings and Elbows:
   i. Install preformed sections of same material as straight segments of pipe insulation when available. Secure according to manufacturer's written instructions.
   ii. When preformed sections of insulation are not available, install mitered sections of cellular-glass insulation. Secure insulation materials with wire or bands.

F. FIELD QUALITY CONTROL

a. Testing Agency: [Owner will engage] [Engage] a qualified testing agency to perform tests and inspections.

b. Perform tests and inspections.

c. Tests and Inspections:
   i. Inspect pipe, fittings, strainers, and valves, randomly selected by Architect, by removing field-applied jacket and insulation in layers in reverse order of their installation. Extent of inspection shall be limited to [three] <Insert number> locations of straight pipe, [three] <Insert number> locations of threaded fittings, [three] <Insert number> locations of welded fittings, [two] <Insert number> locations of threaded strainers, [two] <Insert number> locations of welded strainers, [three] <Insert number>

locations of threaded valves, and [three] <Insert number> locations of flanged valves for each pipe service defined in the "Piping Insulation Schedule, General" Article.

d. All insulation applications will be considered defective Work if sample inspection reveals noncompliance with requirements.

703.9905.04 METHOD OF MEASUREMENT. CELLULAR GLASS INSULATION FOR DUCTILE IRON PIPE - 1” THICK shall be measured by the LINEAR FOOT actually furnished and installed in accordance with the Plans and/or as directed by the Engineer.

703.9904.05 BASIS OF PAYMENT. The accepted quantity of CELLULAR GLASS INSULATION FOR DUCTILE IRON PIPE - 1” THICK will be paid for at their respective contract unit prices per linear foot as listed in the Proposal. The prices so-stated shall constitute full and complete compensation for all labor, tools, materials and equipment, including protection of newly applied markings from traffic, layout, cleaning and sweeping, furnishing and applying the pavement markings, and all incidentals required to finish the work, complete in place and accepted by the Engineer.

CODE 703.9906
GUTTER DRAIN CONNECTION

703.9906.01 GENERAL. This specification covers the requirements and installation of stormwater drainage associated with the East Side Tunnel Bus Shelter.

703.9906.02 MATERIAL.

A. 12” HDPE Handhole:

   a. Grates/ solid cover shall be ductile iron per ASTM A536 Grade 70-50-05 and shall meet an H-10 loading minimum.
   b. Frames shall be ductile iron per ASTM A536 Grade 70-50-05.
   c. 12” HDPE Handhole shall be ADS Nyloplast 12 in Drain Basin or approved equal and shall be custom manufactured according to plan details.
   d. Drainage connection stubs shall be manufactured to accept pipes as shown on plans or connected in the field using “Add-A-Branch”, INSERTA TEE taps or approved equal. Joint tightness shall conform to ASTM D3212.

B. 8” PVC Drain Pipe

   a. Pipe shall be 8 Inch I.D. and manufactured from virgin rigid PVC (polyvinyl chloride) vinyl compounds with a cell class of 11432 as identified in ASTM D4396.
   b. Fittings shall be manufactured from virgin rigid PVC (polyvinyl chloride) vinyl compounds with a cell class of 12454 as identified in ASTM D1784

C. 8” HDPE Drain Pipe

   a. Pipe shall be 8 Inch I.D. High Density Polyethylene meeting ASTM F2648. Material for pipe production shall be an engineered compound of virgin and recycled high density polyethylene conforming with the minimum requirements of cell classification 424420C (ESCR Test Condition B) as defined and described in the latest version of ASTM D3350.
   b. Fittings shall conform to ASTM F2306.

703.9905.03 INSTALLATION.

A. 12” HDPE Handhole

   a. Installation shall comply with the manufacturer’s requirements and as shown on plans.

B. 8” PVC Drain Pipe

a. Installation shall comply with the manufacturer’s requirements and shall conform to all applicable plumbing, fire, and building code requirements. Buried pipe shall be installed in accordance with ASTM D2321 and ASTM F1668. Solvent cement joints shall be made in a two-step process with primer conforming to ASTM F656 and solvent cement conforming to ASTM D2564. The system shall be protected from chemical agents, fire-stopping materials, thread sealant, plasticized-vinyl products or other aggressive chemical agents not compatible with PVC compounds.

C. 8” HDPE Drain Pipe

a. Installation shall comply with the manufacturer’s requirements and shall conform to all applicable plumbing, fire, and building code requirements. Buried pipe shall be installed in accordance with ASTM D2321 and ASTM F1668.

703.9905.04 METHOD OF MEASUREMENT. GUTTER DRAIN CONNECTION shall be measured as a lump sum in accordance with the Plans and/or as directed by the Engineer.

703.9904.05 BASIS OF PAYMENT. GUTTER DRAIN CONNECTION shall be a lump sum. The prices so-stated shall constitute full and complete compensation for all labor, tools, materials and equipment, including protection, layout, cleaning and sweeping, and all incidentals required to finish the work, complete in place and accepted by the Engineer.

CODE 806.9901
EXTERIOR FINISH CARPENTRY

806.9901.01 DESCRIPTION. This work consists of analyzing the existing wood species, the removal and replacement of damaged wooden plank ceiling and molding, and installation of wood plank ceiling and molding where the ceiling is missing at the underside of the bus shelter roof located near the west portal entrance of the East Side Tunnel. Wood planks shall be tongue and groove, matching existing ceiling wood specie, size and shape. Refer to code 842.9901 Painting for clear finish of the wood ceiling. Refer to code 201.9902 Selective Demolition for removal of damaged wood.

806.9901.02 SUBMITTALS. Include Product Data for each type of process and factory fabricated product. Indicate components materials, dimensions, profiles, textures, and colors and include construction and application details.

a. Include data for wood preservative treatment from chemical treatment manufacturer and certification by treating plant that treated materials comply with requirements. Indicate type of preservative used and net amount of preservative retained. Include chemical treatment manufacturer's written instructions for finishing treated material.

b. For products receiving a waterborne treatment, include statement that moisture content of treated materials was reduced before shipment to Project site to levels specified.

c. Samples: For each exposed product and for each color and texture specified.

d. Samples for Initial Selection: for each type of product involving selection of colors, profiles, or textures.

e. Samples for Verification:

1. For each species and cut of lumber and panel products, with half of exposed surface finished; 50 sq. in. for lumber 8 by 10 inches for panels.

f. Compliance Certificates:

1. For lumber that is not marked with grade stamp.

2. For preservative treated wood that is not marked with treatment quality mark.

3. Evaluation Reports: For the following, from ICC-ES:

1. Wood preservative treated wood

g. Sample Warranties: For manufacturer's warranties.

806.9901.03 DELIVERY, STORAGE, AND HANDLING.

a. Stack lumber, plywood, and other panels flat with spacers between each bundle to provide air circulation.

1. Protect materials from weather by covering with waterproof sheeting, securely anchored.

2. Provide for air circulation around stacks and under coverings.

806.9901.04 FIELD CONDITIONS. Weather Limitations: Proceed with installation only when existing and forecasted weather conditions permit work to be performed and at least one coat of specified finish can be applied without exposure to rain, snow, or dampness.

a. Do not install finish carpentry materials that are wet, moisture damaged, or mold damaged.

1. Indications that materials are wet or moisture damaged include, but are limited to, discoloration, sagging, or irregular shape.

2. Indications that materials are mold damaged include, but are not limited to, fuzzy or splotchy surface contamination and discoloration.

806.9901.05 WARRANTY.

a. Wood Manufacturer’s Warranty: Manufacturer agrees to repair or replace components of wood siding, soffits and trim that fail in materials or workmanship within specified warranty period.

1. Failures include, but are not limited to, deformation or deterioration beyond normal weathering.

2. Warranty Period: Siding, Soffits and Trim (Excluding Finish) Twenty five (25) years from date of Substantial Completion.

806.9901.06 MATERIALS, GENERAL.

a. Lumber: DOC PS 20 and applicable rules of grading agencies indicated. If no grading agency is indicated, comply with applicable rules of any rules-writing agency certified by the American Lumber Standard Committee's (ALSC) Board of Review. Grade lumber by an agency certified by the ALSC's Board of Review to inspect and grade lumber under the rules indicated.

1. Factory mark each piece of lumber with grade stamp of inspection agency, indicating grade, species, moisture content at time of surfacing, and mill.

2. For exposed lumber, mark grade stamp on end or back of each piece or omit grade stamp and provide certificates of grade compliance issued by inspection agency.

806.9901.07 WOOD PRESERVATIVE TREATED MATERIALS.

a. Water-Repellent Preservative Treatment by Nonpressure Process: AWPA N1; dip, spray, flood, or vacuum pressure treatment. Coordinate preservative treatment with the transparent finish coating specified in Code 842.9901 Painting.

1. Preservative Chemical: 3-iodo-2-propynyl butyl carbamate (IPBC)

2. Use chemical formulations that do not bleed through or otherwise adversely affect finishes. Do not use colorants in solution to distinguish treated material from untreated material.

806.9901.08 WOOD PLANKS FOR CEILING UNDER BUS SHELTER

a. Species: to match existing as determine by Contractor

b. Dimensions: Match existing

c. Construction: Tongue and Groove

d. Surface: Smooth

806.9901.09 MISCELLANEOUS MATERIALS.

a. Fasteners for Exterior Finish Carpentry: Provide nails or screws, in sufficient length to penetrate not less than 1-1/2 inches into wood substrate.

1. For hardwood, provide stainless steel fasteners.

2. For pressure preservative treated wood, provide stainless steel fasteners.

3. For applications not otherwise indicated, provide stainless steel fasteners.

b. Wood Glue: Waterproof resorcinol glue recommended by manufacturer for exterior carpentry use.

c. Sealants: Latex, complying with ASTM A834 Type C and applicable requirements and recommended by sealant and substrate manufacturers for intended application.

806.9901.10 EXECUTION.

806.9901.11 EXAMINATION.

a. Examine substrates, with Installer present, for compliance with requirements for installation tolerances and other conditions affecting performance of the Work.

b. Examine finish carpentry materials before installation. Reject materials that are wet, moisture damaged, and mold damaged.

c. Proceed with installation only after unsatisfactorily conditions have been corrected.

806.9901.12 PREPARATION.

a. Clean substrates of projections and substances detrimental to application.

b. Prime lumber and moldings to be painted, including both faces and edges, unless factory primed.

1. Cut to required lengths and prime ends.

2. Comply with requirements in Code 842.9901 Painting.

806.9901.13 INSTALLATION OF WOOD PLANKS AND MOLDINGS.

a. Do not use materials that are unsound, warped, improperly treated or finished, inadequately seasoned, or too small to fabricate with proper jointing arrangements.

b. Replace exterior wood planks and moldings under bus shelter ceiling that is damaged or worn and in need of replacement.

c. Install exterior wood planks and moldings level, plumb, true, and aligned with adjacent materials.

1. Use concealed shims where necessary for alignment.

2. Scribe and cut wood planks to fit adjoining work.

3. Refinish and seal cuts as recommended by manufacturer.

4. Install to tolerance of 1/8 inch for level and plumb. Install adjoining exterior finish carpentry with 1/32 inch maximum offset for flush installation and 1/16 inch maximum offset for reveal installation.

5. Coordinate wood planks and moldings with materials and systems in or adjacent to it.

6. Provide cutouts for mechanical and electrical items that penetrate exterior wood planks.

7. Adjust joinery for uniform appearance.

806.9901.14 CLEANING AND PROTECTION.

a. Clean exterior finish carpentry on exposed and semi exposed surfaces.

b. Touch up factory applied finished to restore damaged or soiled areas.

c. Protect installed products from damage from weather and other causes during construction.

d. Remove and replace finish carpentry materials that are wet, or moisture damaged, and mold damaged.

1. Indications that materials are wet or moisture damaged include, but are not limited to, discoloration sagging, or irregular shape.

2. Indications that materials are mold damaged include, but are not limited to, fuzzy or splotchy surface contamination and discoloration.

806.9901.15 METHOD OF MEASUREMENT. "Exterior Finish Carpentry" will be measured by the number of "Square Feet" actually placed in accordance with the Contract Documents and/or as directed by the Engineer. All items are measured complete in place, including all preparation, accessories, and incidentals.

806.9901.16 BASIS OF PAYMENT. The accepted quantities of "Exterior Finish Carpentry" will be paid for at the respective contract unit prices per "Square Feet". The price so stated shall constitute full and complete compensation for all labor, materials, equipment, and all incidentals required to finish the work, complete in place and accepted by the Engineer.

CODE 806.9902
BUS SHELTER TIE BEAM

806.9902.01 DESCRIPTION. This work consists of furnishing, fabricating, and erecting the timber tie beam as a replacement in-kind of the existing damaged tie beam as shown in the Plans. The reconstructed tie beam shall be identical in appearance to the remaining tie beams and shall be supported as shown in the Plans.

806.9902.02 MATERIALS. Materials for bus shelter replacement tie beam shall conform to the following requirements.

a. **Timber**: Use sawn lumber that conforms to AASHTO M168, Standard Specification for Wood Products and as outlined in Section M11 of the Standard Specifications.

b. **Hardware:** Bolts, nuts, drift bolts, dowels, and washers may be fabricated with mild carbon steel. Washers may be cast as iron or malleable iron castings.

806.9902.03 CONSTRUCTION METHODS. The bus shelter replacement tie beam shall be accurately positioned at the location shown on the Plans and shall be a replacement in-kind from original construction. Supporting temporary shoring to be installed for bus shelter elements to facilitate the installation of the replacement tie beam. Lag screw installation to be in accordance with Standard Specifications Subsection 806.03.7.

806.9902.03.1 Submittals. Product Data: Submit manufacturer's technical data for each product indicated including recommendations for their application and use. Include test reports, mockups and/or prototypes substantiating that products comply with requirements. Shop Drawings: Submit shop drawings of replacement tie beam for Engineer approval.

806.9902.03.2 Preinstallation Meetings. Conduct conference at East Side Tunnel, bus shelter at the West Portal entrance, Providence, Rhode Island.

806.9902.03.5 Delivery, Storage, and Handling. Deliver materials to site in manufacturer's original and unopened containers and packaging, bearing labels as to type and names of products and materials. Protect tie beam member during storage and construction from wetting by rain, snow, or ground water, and from staining or intermixture with other materials. Comply with manufacturer's recommendations for minimum and maximum temperature requirements for storage.

806.9902.03.5 Execution. Bore holes for lag screws with a bit not larger than the body of the screw at the base of the thread. To prevent splitting or stripping of the threads, bore a lead hole for the shank with a bit of the same diameter and to the same depth as the shank. Ensure that the depth of holes for lag screws are 1 in. less than the length under the thread. Do not drive lag screws into the lead hole with a hammer. Instead, turn the screw in with a wrench.

Provide temporary shoring, as needed, to existing shelter elements to allow installation of casted column and new tie beam.

806.9902.04 METHOD OF MEASUREMENT. "Bus Shelter Tie Beam" will be measured by the completion and accepted tie beam member in accordance with the Contract Documents and/or as directed by the Engineer by the each. All items are measured complete in place, including all preparation, accessories, and incidentals. The computation of quantity will be based on the nominal commercial widths and thicknesses of the respective materials.

806.9902.05 BASIS OF PAYMENT. The accepted quantities of "Bus Shelter Tie Beam" will be paid for at the respective contract unit prices per each as listed in the Proposal. The prices so-stated constitute full and complete compensation for all labor, materials, and equipment and for all incidentals required to finish the work, complete and accepted by the Engineer.

MASONRY REPOINTING OF MORTAR JOINTS, MASONRY REPAIR, MASONRY CLEANING

CODE 807.0350 MASONRY REPOINTING OF MORTAR JOINTS
CODE 807.0351 MASONRY REPAIR
CODE 807.0352 MASONRY CLEANING

807.0350.01 DESCRIPTION. This work consists of cleaning of existing masonry surfaces, making repairs or replacement of damaged brick units with new brick, raking and repointing of existing mortar joints and re-anchoring of brick veneer in the east and west portals and Electrical Room located near the west portal entrance of the East Side Tunnel. Refer to Electrical Room Repair Plans and Detail Drawings.

807.0350.02 SUBMITTALS. Product Data: Submit manufacturer's technical data for each product indicated including recommendations for their application and use. Include test reports and certifications substantiating that products comply with requirements.

807.0350.03 QUALITY ASSURANCE.

807.0350.03.1 Mockups. Prepare mockups of cleaning on existing surfaces and brick masonry repointing to demonstrate aesthetic effects and to set quality standards for materials and execution.

a. General: Brick cleaning and paint removal from brick shall follow the recommendations listed in the Standards for Preservation & Guidelines for Preserving Historic Building, as written in the Secretary of The Interior's Standards For The Treatment Of Historic Properties.

b. Cleaning: Clean an area approximately 5 sq. ft. or large enough for evaluation of each type of masonry and surface condition.

c. Repointing: Rake out joints in two separate areas, each approximately 36 inches high by 48 inches wide, unless otherwise indicated, for each type of repointing required, and repoint one of the areas.

1. Brick Masonry Repointing Specialists Qualifications: Engage an experiences brick masonry repointing firm to perform work of this Section. Firm shall have completed work similar in material, design, and extent to that indicated for this Project with a record of successful in-service performance. Experience in only installing masonry is insufficient experience for masonry repointing work.

2. Quality Control Program: Prepare a written quality control program for this Project to systematically demonstrate the ability to properly follow methods and use materials and tools without damaging masonry. Include provisions for supervising performance and preventing damage.

d. Test cleaners and methods on samples of adjacent materials for possible adverse reactions. Do not test cleaners and methods known to have deleterious effects.

e. Allow a waiting period of not less that seven days after completion of sample cleaning to permit a study of sample panels for negative reactions.

807.0350.03.2 Samples. Submit, for verification purposes, samples of the following:

a. Each new exposed masonry mortar to be used for replacing existing materials. Include in each set of samples the full range of colors and textures to be expected in completed work.

b. Each type of chemical cleaning material

c. Each type of chemical clear sealer

d. Stone masonry patching materials' product data and application instructions.

807.0350.03.3 Preinstallation Meetings. Conduct conference at East Side Tunnel, West Portal entrance, Providence, Rhode Island.

807.0350.04 DELIVERY, STORAGE AND HANDLING.

a. Deliver materials to site in manufacturer's original and unopened containers and packaging, bearing labels as to type and names of products and materials.

b. Protect masonry restoration materials during storage and construction from wetting by rain, snow or ground water, and from staining or intermixture with materials.

c. Protect grout, mortar and other materials from deterioration by moisture temperature. Store in a dry location or in waterproof containers. Keep containers tightly closed and away from open flames. Protect liquid components from freezing. Comply with manufacturer's recommendations for minimum and maximum temperature requirements for storage.

807.0350.05 MATERIALS.

807.0350.05.1 Cleaning Materials and Equipment.

a. Clean Water. Water used for cleaning should be potable, free of oils, acids, alkalis and organic matter. Iron content should be less than 2 parts per million by weight. Determine whether the local water includes additives, water softeners or other agents that may cause issues if used for cleaning.

b. Brushes and chisels. Use fiber bristles only, non-metallic chisels, wood scrapers. Do not use wire brushes or brushes that are not resistant to chemical cleaner being used.

c. Spray Equipment. Use spray equipment that provides controlled spray application at volume and pressure indicated for water and chemical cleaners. Adjust pressure and volume to ensure that cleaning methods do not damage surfaces, including joints. Equip units with pressure gages.

1. For chemical cleaner spray application, use low-pressure tank or chemical pump suitable for chemical cleaner indicated, equipped with nozzle having a cone shaped spray.

2. For water spray application, use equipment capable of maintaining temperature between 140 and 160 deg F at flow rates indicated.

807.0350.05.2 Brick Masonry and Cleaners.

a. For Brick Masonry: Prosoco Sure Klean Restoration Cleaner

b. For spot stains removal, where required: Subject to compliance with requirements, provide Sure Klean Limestone Restorer, ProSoCo, Inc.

c. Replacement of new brick must match original brick in size, type, color, appearance, and composition.

1. Face Brick: As required to complete brick masonry repair work.

2. Brick Matching Existing: Units with colors, color variation within units, surface texture, size, and shape that match existing brickwork.

3. Building Brick: ASTM C62, Grade SW where in contact with earth or Grade SW, MW, or NW for concealed backup; and of same vertical dimension as face brick, for masonry work concealed from view.

807.0350.05.3 Mortar Materials.

a. Portland Cement: ASTM C 150/C 150M, Type I, Type II, Type III (cold-weather construction); gray where required for color matching mortar.

b. Hydrated Lime: ASTM C 207, Type S.

c. Masonry Cement: ASTM C 91/C 91M.

d. Colored Mortar Aggregate: ASTM C 144, unless otherwise indicated. Natural or manufactured sand selected to produce mortar color to match adjacent existing mortar color. Match size, texture and gradation of existing mortar as closely as possible.

e. Colored Mortar Pigment: ASTM C 979/ C979M. Natural and synthetic iron oxides and chromium oxides, compounded for use in mortar mixes. Use only pigments with record of satisfactory performance in masonry mortars.

f. Provide sand with rounded edges for pointing mortar.

807.0350.06 MASONRY CLEANING.

807.0350.06.1 Protection and Preparation.

a. Comply with each manufacturer’s written instructions for protecting building and other surfaces against damage from exposure to its products. Prevent chemical cleaning solutions from coming into contact with people, motor vehicles, buildings, and other surfaces that could be harmed by such contact.

b. Cover adjacent surfaces with materials that are proven to resist removers, chemical cleaners used unless products being used will not damage adjacent surfaces. Do not clean masonry during winds of sufficient force to spread cleaning solutions to unprotected surfaces. Use

protective materials that are waterproof and UV resistant. Apply masking agents according to manufacturer's written instructions. When no longer needed, promptly remove masking to prevent adhesive staining.

c. Dispose of run-off from cleaning operations by legal means and in a manner which prevents soil erosion, undermining of paving and foundations, damage to landscaping, and water penetration into building interiors.

807.0350.06.2 Masonry Cleaning Methods.

a. Saturate with water: Pre-wet the surface with cold water before applying cleaning solution, fully saturating the substrate. Unless otherwise indicated, holds spray nozzle at least 6 inches from masonry surface and apply water in horizontal back-and-forth sweeping motion, overlapping previous stroked to produce uniform coverage. Use a maximum of 100 psi when using pressurized water. Surfaces below the area being cleaned should also be saturated and kept wet until after final rinse to prevent streaking and absorption of runoff from above. If the wall surface appears to be drying, re-apply water until ready to apply cleaning solution.

b. Preliminary Cleaning - Remove mortar clumps: Carefully remove heavy accumulations of rigid materials from masonry surface. Use non-metallic chisels to remove large mortar chunks. Remove smaller particles using a fiber bristle brush. Do not scratch or chip masonry surface.

1. Remove plant growth

c. General Cleaning - Start with gentlest cleaning solution and method for overall cleaning:

1. Water only
2. Mild detergents/surfactants
3. One-step chemical cleaners
4. Two-step chemical cleaners

d. Applying cleaning solution: Select the proper cleaning solution for the condition or application. Mix and apply cleaning solution in strict accordance with manufacturer's instructions. Clean not more than 20 sq. ft. of wall area at a time. The solution may be applied using a masonry cleaning brush or chemical pump/tank sprayer. Do not allow chemicals to remain on surface for periods longer than those indicated or recommended in writing by manufacturer.

e. Rinse thoroughly with water: Flush walls with large amounts of clean water. Rinse off chemical residue and soil by working upward from bottom to top of each treated area at each stage or scaffold setting. Periodically, during each rinse, test pH of rinse water running off of cleaned area to determine that chemical cleaner is completely removed. Apply neutralizing agent and repeat rinse if necessary to produce tested pH of between 6.7 and 7.5.

f. Repeat cleaning procedure above where required to produce cleaning effect established by mockup.

807.0350.06.2.1 Removing Efflorescence.

a. Any sources of moisture ingress should be identified and repaired, and the brickwork allowed to dry before efflorescence is removed.

b. Remove white efflorescence by dry brushing or brushing with a stiff fiber brush and water.

c. Heavier accumulations of efflorescence may be removed with a proprietary cleaner. Do not use acid solutions for cleaning masonry units unless specifically approved by Architect. Manufacturer's instructions shall be carefully followed.

1. Green Efflorescence – Sure-Klean No. 800 Stain Remover

807.0350.06.2.2 Removing Paint, Coatings and Graffiti.

a. Start with non-abrasive methods. Methods involving scraping and abrasive blasting shall not be used when risk of lead paint is present.

b. Abrasive blasting or non-metallic abrasive pads may be used for removal of very old, dried paint. Graffiti that has penetrated masonry shall be removed by poultice, paste or gel that can cling to the masonry.

807.0350.06.2.3 Brick Dust.

a. A dust mask or respirator should be used to avoid inhaling dust particles. Compressed air should be avoided to clean dust.

b. Use a soft fiber brush to remove surface adhered dust and particles produced from the cutting of brick.

c. Wipe down surface using a dust mop or damp cloth.

807.0350.07 MASONRY REPAIR AND TREATMENT TO HISTORIC PROPERTIES

a. Repair work, methods, and materials in areas of brick with historic features shall follow the Secretary of the Interior's Standards for the Treatment of Historic Properties.

1. West Portal Center Wall (Dual-Arched Façade):

a. Vertical cracking within the mortar and masonry units shall be investigated before any repair work. Deep cracks shall be secured by transverse bolts.

b. Areas of damaged brick-clad facade, cement imposts, keystones, and insert panels shall be accurately identified and repaired in-kind.

c. Refer to Code 807.0350.09 of this specification for repointing of mortar joints.

807.0350.08 GENERAL MASONRY REPAIR.

807.0350.08.1 Removal and Replacement.

a. At locations indicated, remove bricks that are damaged, spalled, or deteriorated or are to be reused. Carefully remove entire units from joint to joint, without damaging surrounding masonry, in a manner that permits replacement with full size units. Remove only face units. Damaged brick units in Inner layers of the wall shall be repaired in place. Refer to specification Codes

836.9901- 836.9903 for crack repair and Code 817.9901 – 9904 for spall repair of inner brick layers.

b. Support and protect remaining masonry that surrounds removal area.

c. Maintain flashing, reinforcement, lintels, and adjoining construction in an undamaged condition.

d. Notify Architect of unforeseen detrimental conditions including voids, cracks, bulges, and loose units in existing masonry backup, rotted wood, rusted metal, and other deteriorated items.

e. Remove in an undamaged condition as many whole bricks as possible.

1. Remove mortar, loose particles, and soil from brick by cleaning with hand chisels, brushes, and water.

2. Remove sealants by cutting close to brick with utility knife and cleaning with solvents.

f. Clean masonry surrounding removal areas by removing mortar, dust, and loose particles in preparation for brick replacement.

g. Replace removed damaged brick with other removed brick in good condition, where possible, matching existing brick. Do not use broken units unless they can be cut to useable size.

h. Install replacement brick into bonding and coursing pattern of existing brick. If cutting is required, use a mortar-driven saw designed to cut masonry with clean, sharp, unchipped edges.

1. Maintain joint width for replacement units to match existing joints.

2. use setting buttons or shims to set units accurately spaced with uniform joints.

i. Lay replacement brick with rebuilding (setting) mortar and with completely filled bed, head, and collar joints. Butter ends with enough mortar to fill head joints and shove into place. Wet both replacement and surrounding bricks that have ASTM C 67 initial rates of absorption (suction) of more than 30 g/30 sq. in. per min. Use wetting methods that ensure that units are nearly saturated, but surface is dry when laid.

1. Rake out mortar used for laying brick before mortar sets according to Code 807.0350.09 “Repointing to Masonry Mortar Joints”. Point at same time as repointing of surrounding areas.

2. When mortar is hard enough to support units, remove shims and other devices interfering with pointing of joints.

j. Curing: Cure mortar by maintaining in thoroughly damp condition for at least 72 consecutive hours, including weekends and holidays.

1. There shall be no hairline cracking within the mortar or mortar separation at edge of joint. If hairline cracking is present, completely remove such mortar and repoint.

807.0350.08.2 Patching.

a. Remove loose material from masonry surface. Carefully remove additional material so patch does not have feathered edges but has square or slightly undercut edges on area to be patched and is at least ¼ inch thick, but not less than recommended in writing by patching compound manufacturer.

b. Mask adjacent mortar joint or rake out for repointing if patch extends to edge of brick.

c. Rinse surface to be patched and leave damp, but without standing water.

d. Brush-coat surfaces with slurry coat of patching compound according to manufacturer's written instructions.

e. Place patching compound in layers as recommended in writing by patching compound manufacturer, but not less than ¼ inch or more than 2 inches thick. Roughen surface of each layer to provide a key for next layer.

f. Trowel, scrape, or carve surface of patch to match texture and surrounding surface plane or contour of brick. Shape and finish surface before or after curing, as determined by testing, to best match existing brick.

g. Keep each layer damp for 72 hours or until patching compound has set.

807.0350.09 REPOINTING TO MASONRY MORTAR JOINTS

807.0350.09.1 Mortar Mixes.

a. Use lime-based mortar compatible with brick properties.

b. Measurement and Mixing: Measure cementitious materials and sand in a dry condition by volume or equivalent weight. Do not measure by shovel; use know measure. Mix materials in a clean, mechanical batch mixer.

1. Mixing Pointing Mortar: Thoroughly mix cementitious materials and sand together before adding any water. Then mix again, adding only enough water to produce a damp, workable mix that retains its form when pressed into a ball. Maintain mortar in this dampened condition for 15 to 30 minutes. Add remaining water in small portions until mortar reaches desired consistency. Use mortar within one hour of final mixing; do not retemper or use partially hardened material.

c. Colored Mortar: Produce mortar of color required by using specified ingredients. Do not alter specified proportions without Architect's approval.

d. Do not use admixtures in mortar unless otherwise indicated.

e. Mixes: Mix mortar as required for immediate use only and discard any mixed for a period exceeding 2-1/2 hours. Accurately maintain and control the specified proportions of the mortar materials during the entire progress of the work. Thoroughly mix cementitious materials and aggregates with the amount of water to produce satisfactory workability. Machine mix all mortar.

807.0350.09.2 Repointing Procedures.

a. Protection: Remove gutters, downspouts, and associated hardware adjacent to masonry and store during masonry repointing. Reinstall when repointing is complete.

b. Do not rake out and repoint joints where not required. Rake out and repoint joints at locations of the following defects:

1. Holes and missing mortar

2. Cracks 1/16 inch or more in width and of any depth.

3. Hollow-sounding joints when tapped by metal object.

4. Eroded surfaces ¼ inch or deeper.

5. Deterioration to point that mortar can be easily removed by hand, without tools.

6. Joints filled with substances other than mortar.

c. Joint Raking: Rake out joints as follows, according to procedures demonstrated in approved mockup:

1. Remove mortar from joints to depth of 2-1/2 times their widths but not less than ¾" nor less than that required to expose sound, unweathered mortar.

2. Remove mortar from masonry surfaces within raked-out joints to provide reveals with square backs and to expose masonry for contact with pointing mortar. Brush, vacuum or flush joints to remove dirt and loose debris.

3. Do not spall edges of masonry surfaces within raked-out joints to provide reveals with square backs and to expose masonry for contact with pointing mortar, Brush, vacuum or flush joints to remove dirt and loose debris.

4. Do not spall edges of masonry units or widen joints. Replace any masonry units, which become damaged.

5. Cut out old mortar by hand with chisel and mallet, unless otherwise indicated.

6. Power operated rotary hand saws and grinders will be permitted only on specific written approval of Architect based on submission by Contractor of a satisfactory quality control program and demonstrated ability of operators to use tools without damage due to worker fatigue.

d. Notify Architect of unforeseen detrimental conditions including voids in mortar joints, cracks, loose masonry units, rotted wood, rusted metal, and other deteriorated items.

e. Joint Pointing:

1. Rinse joint surfaces with water to remove dust and mortar particles. Time rinsing application so, at time of pointing, joint surfaces are damp but free-standing water. If rinse water dries, dampen joint surfaces before pointing.

2. Apply pointing mortar first to areas where existing mortar was removed to depths greater than surrounding areas. Apply in layers not greater than 3/8 inch until a uniform depth is formed. Fully compact each layer and allow to become thumbprint hard before applying next layer.

3. After deep areas have been filled to same depth as remaining joints, point joints by placing mortar in layers not greater than 3/8 inch. Fully compact each layer and allow to become thumbprint hard before applying next layer. Where existing masonry units have worn or round edges, slightly recess finished mortar surface below face of masonry to avoid widened joint faces. Take care not to spread mortar beyond joint edges onto exposed masonry surfaces or to featheredge the mortar.

4. When mortar is thumbprint hard, tool joints to match original appearance of joints as demonstrated in approved mockup. Remove excess mortar form edge of joint by brushing.

5. Cure mortar by maintaining in thoroughly damp condition for at least 72 consecutive hours, including weekends and holidays.

6. Where repointing work precedes cleaning of existing masonry allow mortar to harden not less than 30 days before beginning cleaning work.

7. Owner shall have the right to perform periodic tests to verify depth of repointing. Contractor shall repair with like materials area where mortar has been removed to ascertain depth of repointing.

807.0350.09.3 Final Cleaning.

a. After mortar has fully hardened, thoroughly clean exposed masonry surfaces of excess mortar and foreign matter; use wood scrapers, stiff-nylon or fiber brushes, and clean water, applied by low pressure spray.

1. Do not use metal scrapers or brushes.

2. Do not use acidic or alkaline cleaners.

807.0350.10 METHOD OF MEASUREMENT.

"Masonry Repointing of Mortar Joints" – 807.0350 of mortar joints will be measured by the number of "Linear Feet" of new masonry actually placed in accordance with the Contract Documents and/or as directed by the Engineer. All items are measured complete in place, including all preparation, accessories, and incidentals.

"Masonry Repair" – 807.0351 of masonry repair will be measured by the number of "Square Feet" of masonry replaced in accordance with the Contract Documents and/or as directed by the Engineer. All items are measured complete in place, including all preparation, accessories, and incidentals.

"Masonry Cleaning" – 807.0352 of masonry cleaning will be measured by the number of "Square Feet" of masonry cleaned in accordance with the Contract Documents and/or as directed by the Engineer. All items are measured complete in place, including all preparation, accessories, and incidentals.

807.0350.11 BASIS OF PAYMENT. The accepted quantities of "Masonry Repointing of Mortar Joints " – 807.0350 will be paid for at the respective contract unit prices per "Linear Feet". The price so stated shall constitute full and complete compensation for all labor, materials,

equipment, and all incidentals required to finish the work, complete in place and accepted by the Engineer.

The accepted quantities of "Masonry Repair" – 807.0351 will be paid for at the respective contract unit prices per "Square Feet". The price so stated shall constitute full and complete compensation for all labor, materials, equipment, and all incidentals required to finish the work, complete in place and accepted by the Engineer.

The accepted quantities of "Masonry Cleaning" – 807.0352 will be paid for at the respective contract unit prices per "Square Feet". The price so stated shall constitute full and complete compensation for all labor, materials, equipment, and all incidentals required to finish the work, complete in place and accepted by the Engineer.

SECTION 817

REPAIRS TO STRUCTURE CONCRETE MASONRY

CODE 817.9901 REPAIRS TO STRUCTURE CONCRETE MASONRY - SPALLS - S1
CODE 817.9902 REPAIRS TO STRUCTURE CONCRETE MASONRY - SPALLS - S2
CODE 817.9903 REPAIRS TO STRUCTURE CONCRETE MASONRY - SPALLS - S3
CODE 817.9904 REPAIRS TO STRUCTURE CONCRETE MASONRY - SPALLS - S4
CODE 817.9905 REPAIRS TO STRUCTURE CONCRETE MASONRY – SHOTCRETE

The respective subsections of Section 817 of the Standard Specifications for Road and Bridge Construction are amended as follows:

817.01 DESCRIPTION. This work consists of making repairs to structure concrete masonry by removing and disposing deteriorated concrete; furnishing and installing steel reinforcement; preparing bonding surfaces of concrete; preparing and installing bonding agent; replacing the deteriorated concrete with a specified repair material; and finishing and curing to the lines and grades specified at the locations indicated on the Plans, all in accordance with these Specifications and/or as may be directed by the Engineer. Structural defects were identified during inspections of the East Side Tunnel. Defects were classified based on the type and severity of the observed defect.

817.02 MATERIALS.

817.02.1 Pneumatically Applied Mortar (Shotcrete). Materials for shotcrete shall comply with the following:.

The shotcrete material shall be Sika King RS-D1 SY, manufactured by Sika Corporation or an approved equivalent. Any proposed equivalent product must be submitted to the project Engineer for review and approval. Proposed equivalent shotcrete product must be a complete, pre-blended, pre-packaged product in which all mix components have been weigh-batched in an ISO 9001:2000 registered production facility.

In situ shotcrete mix properties must meet or exceed the performance requirements outlined in the following table:

PROPERTY	TEST METHOD	RESULTS	
Compressive Strength	ASTM C 116 (Adapted)	1 Hour	Minimum 1,500 psi (10 MPa)
		2 Hours	Minimum 2,175 psi (15 MPa)
		3 Hours	Minimum

		1 Day	3,000 psi (21 MPa) Minimum
	ASTM C 1604	7 Day	3,625 psi (25 MPa) Minimum
		28 Day	4,640 psi (32 MPa) Minimum
Flexural Strength	ASTM C 78	28 Day	5,500 psi (38 MPa) Minimum
			785 psi (5.4 MPa)
Air Content	ASTM C 457	4 to 8%	
Air Void Spacing Factor	ASTM C 457	Maximum 300 µm	
Freeze Thaw Resistance	ASTM C 666	Minimum 100 %	
Salt Scaling Resistance	ASTM C 672	Maximum 0.12 lb/ft^2 (0.6 kg/m^2)	
Uniaxial Drying Shrinkage	ASTM C 157	Maximum 400 µm/m	
Boiled Absorption	ASTM C 642	Maximum 6.0 %	
Volume of Permeable Voids	ASTM C 642	Maximum 15.0 %	
Rapid Chloride Permeability	ASTM C 1202	Maximum 1200 Coulombs	
Aggregate Gradation	ACI 506R, Table 1.1	Gradation 1 or 2	

Water conforming to ASTM C1602.

817.02.2 Patching Mortar. Patching mortar shall conform to the requirements of ASTM C928; “Rapid Hardening or Very Rapid Hardening Mortar” as indicated on the Plans and be listed on the Department's Approved Materials List. The mortar shall be a non-shrink type and chloride free. Available Products: Subject to compliance with requirements, products that may be incorporated into the Work include, but are not limited to, the following:

a. Vertical & Overhead Cemetitious Hand Applied Patching Mortar

1) Mapei, Planitop X
2) Masteremao N 424
3) Sika Corporation; Sikatop 123 Plus

b. Vertical & Overhead Form and Pour / Form & Pump

1) Sika; Sikatop 111
2) MasterEmaco T 454
3) Silpro Masonry Sys Inc; VOpatch

c. Horizontal Cementitious Repair Products; Rapid Setting

1) Kaufman Products Inc.; Duracrete II
2) MasterEmaco; ThoRoc 10-60 Rapid Mortar
3) Mapei; Planitop 18

Repair mortars not previously approved must be submitted for approval to the Engineer 45 days before intended use. All materials shall be used in accordance with manufacturer's recommendations.

817.02.3 Reinforcement. All reinforcement shall be galvanized and conform with the requirements of Section M.05.

817.02.4 Bonding Agent. A bonding agent shall be used when mortar repairs are specified or indicated on the Plans. Available products subject to compliance with requirements, products that may be incorporated into the Work include, but are not limited to the following:

1). Kaufman Products Inc.; SurePoxy HM
2) Euclid Chemical Company (The); Dural #452 Gel.
3) Sika Corporation; Sikadur 35, Hi-Mod LV.

The bonding agent shall be as specified and/or as indicated on the Plans and be listed on the Department's Approved Materials List. Bonding agents not previously approved must be submitted for approval to the Engineer 45 days before intended use. All materials shall be used in accordance with manufacturer's recommendations.

817.02.2.5 Miscellaneous Materials.

817.02.2.5.1. Epoxy Joint Filler. The epoxy joint filler shall comply with the following: "Two-component, semi-rigid, 100 percent solids, epoxy resin with a Type A Shore durometer hardness of at least 80 per ASTM D 2240", and as indicated on the Plans, and be listed on the Department's Approved Materials List. Joint fillers previously approved must be submitted for approval to the Engineer 45 days before intended use. All materials shall be used in accordance with manufacturer's recommendations.

817.02.2.5.2. Epoxy Crack Injection Adhesive. The epoxy crack injection adhesive shall comply with the following: "ASTM C 881/C 881M", and as indicated on the Plans, and be listed on the Department's Approved Materials List. Epoxy crack injection adhesive previously approved must be submitted for approval to the Engineer 45 days before intended use. All materials shall be used in accordance with manufacturer's recommendations. Capping adhesive shall be a product manufactured for use with crack injection adhesive by same manufacturer.

817.02.2.5.3. Steel Plates, Shapes, and Bars. ASTM A 36/A 36M in accordance with M.05.04 and:

1. After fabricating, prepare surfaces to comply with SSPC-SP 6/NACE No. 3, "Commercial Blast Cleaning."

2. After preparation, apply two-coat high-performance coating system consisting of organic zinc- rich primer, complying with SSPC-Paint 20 or SSPC-Paint 29 and topcoat of high-build, urethane or epoxy coating recommended by manufacturer for application over specified

zinc- rich primer. Comply with coating manufacturer's written directions and with requirements in SSPC-PA 1, "Paint Application Specification No. 1: Shop, Field, and Maintenance Painting of Steel," for shop painting.

817.02.2.5.4. Bolts, Nuts, and Washers. Carbon steel; ASTM A 307, Grade A, for bolts; ASTM A 563, Grade A, for nuts; and ASTM F 436 for washers; hot-dip or mechanically zinc coated in accordance with M.05.04.4.

817.02.2.5.5. Postinstalled Anchors. The anchoring systems shall comply with the following : “Expansion anchors, made from stainless-steel components complying with ASTM F 593 and ASTM F 594, Alloy Group 1 or 2 for bolts and nuts; ASTM A 666 or ASTM A 276, Type 304 or 316, for anchors, with capability to sustain, without failure, a load equal to four times the load imposed, as determined by testing per ASTM E 488, conducted by a qualified independent testing agency” , and as indicated on the Plans, and be listed on the Department’s Approved Materials List. Anchoring systems approved must be submitted for approval to the Engineer 45 days before intended use. All materials shall be used in accordance with manufacturer's recommendations.

817.02.2.5.6. Embedded Galvanic Anodes. Type 1A alkali-activated anode. Embedded galvanic anodes shall be Anode Type 1A Class P with the following nominal dimensions: 2.6 in. diameter by 1.2 in. deep (60 mm diameter by 30 mm). The anodes shall be pre-manufactured with a nominal 65 grams of zinc in compliance with ASTM B418 Type II cast around a pair of uncoated, non-galvanized steel tie wires and encased in a highly alkaline cementitious shell with a pH of 14 or greater. The anode unit shall contain no added sulfate, nor shall it contain added chloride, bromide or other constituents that are corrosive to reinforcing steel. Anode units shall be supplied with integral unspliced wires for directly tying to the reinforcing steel. Embedded galvanic anodes shall be Galvashield XP available from Vector Corrosion Technologies USA, MasterProtect 8065 CP from BASF Construction Systems, Sika Galvashield available from Sika or approved equal.

817.02.5 Form and Cast-in-Place Concrete. Concrete shall be as indicated on the Plans and conform to the applicable provisions of SECTION 601, Portland Cement Concrete of these specifications.

817.03 CONSTRUCTION METHODS.

817.03.1 Surface Preparation (All Repair Methods). All deteriorated soft or honeycombed concrete shall be removed from the areas to be repaired by means of suitable power and hand tools to a uniform depth, sufficient to expose a bonding surface of sound material. Power tools that cause or may cause over-breakage of concrete are prohibited. Pneumatic/chipping hammers shall not be heavier than the nominal 30-pound class. Pneumatic/chipping hammers or mechanical chipping tools, to remove concrete within two inches beneath or around reinforcing steel designated to remain, shall not be heavier than the nominal 15-pound class. Tools shall not contact reinforcing steel to remain.

The boundaries of areas to be removed where indicated on the Plans or as directed by the Engineer, shall be saw cut square to a minimum depth of 1 inch, unless otherwise noted on the Plans. Thin, tapered or feathered edges are prohibited.

In areas where reinforcing steel is found to be surrounded by deteriorated concrete or where at least one-half of the rebar surface area is exposed, the depth of concrete removal shall be such as to include all deteriorated concrete but not less than that depth necessary to allow for one-inch minimum annular clearance around the reinforcing bars. All corroded reinforcing bars to remain within the concrete removal boundaries shall be thoroughly cleaned by sandblasting or by other suitable methods approved by the Engineer to remove all rust. Those bars that have lost 1/4 or more of their original diameter shall be supplemented by new bars spliced in place. New bars shall be lapped as indicated on the Plans to develop the full strength of the bar. Additional concrete removal may be necessary to provide this lap. Dual bars of equivalent or greater cross-sectional area may be used.

All newly exposed concrete repair surfaces shall be free of loose particles and other foreign material. The repair areas shall be thoroughly cleaned and be left roughened by the use of sandblasting, compressed air, air and water blasting, steam, wire brushing, or by other methods approved by the Engineer. The Contractor may use one or all of the various means of cleaning the repair areas as approved or as ordered by the Engineer.

Care shall be taken during the removal of the designated portions of the structure to avoid damaging the portions that are to remain in place. Any damage caused by the Contractor to the existing structure that is designated to remain in place shall be repaired or replaced by the Contractor at its own expense to the satisfaction of the Engineer. Regardless of the method of removal, if in the opinion of the Engineer the removal operation causes excessive damage to portions of the concrete which are to remain, the Contractor shall cease his operations until such time that an alternate removal method has been proposed by the Contractor and has been approved by the Engineer. Claims for additional time or compensation due to such cessation of operations will not be approved.

The Contractor shall ensure that no debris or any other material falls onto the roadway. Should debris or material fall onto the roadway or waterway, such shall be removed immediately, and all work shall stop until such time as a revised procedure of operation has been submitted and approved by the Engineer. All damages or injuries as a result of debris or material falling shall be the responsibility of the Contractor.

All such debris and materials shall be removed and legally disposed of off the project site. Storing or burying of material or debris on site is not allowed.

The surface against which mortar is to be placed shall be kept wet for at least one hour and then allowed to dry to a saturated surface dry (SSD) condition just prior to application of the repair material.

Where bonding agents are specified for use, they shall be applied in accordance with the manufacturer's recommendations. The Contractor shall be aware of the contact time, as per the manufacturer's recommendation after the placement of the bonding agent and shall perform the necessary coordination between the associated construction activities, primarily the surface preparation, the erection of forms, and the delivery and placement of concrete. The Contractor shall take measures to ensure that the contact time is not exceeded. If the contact time is exceeded, the bonding agent shall be re-applied in accordance with the manufacturer's recommended procedures for reapplication, at no additional cost to the State.

817.03.2 Placement of Reinforcing. Repairs up to 2-inch depth will not require wire mesh reinforcement unless otherwise directed by the Engineer. In cases where the thickness of the repair mortar exceeds 1½-inches depth and existing bar reinforcement is available, galvanized wire mesh reinforcement shall be attached to the bars with tie wire. If existing rebar is not available, wire mesh reinforcement shall be installed by means of mechanical concrete anchors in accordance with the requirements of Table 1. For areas where the repair exceeds 4 inches depth, a single layer of wire mesh shall be used to reinforce each 2-inch thickness of patch material.

Table 1

Size and Spacing of Anchors

Thickness of Placement (in.)	Overhead Surfaces Dia. (in,) Spacing (in.)	Vertical Surfaces Dia. (in.) Spacing (in.)	Top Horizontal Surfaces Dia. (in.) Spacing (in.)
1½ to 4	1/4 at 24	1/4 at 24	1/4 at 36
4 to 5	1/4 at 20	1/4 at 24	1/4 at 36
5 to 6	3/8 at 17	3/8 at 21	3/8 at 36
Over 6	3/8 at 16	3/8 at 20	3/8 at 36

Mechanical concrete anchors shall be galvanized, hooked type expansion bolts to be approved by the Engineer and conforming to ASTM A307 Grade A. The exposed end of each anchor shall have at a minimum a right-angle bend for engaging reinforcement. At least three anchors shall be used in each individual patch area.

If any reinforcement is damaged by the Contractor during the repair procedure, it shall be replaced at the Contractor's expense, as directed by the Engineer.

817.03.3 Application of Pneumatically Applied Mortar (Shotcrete).

a. Submittals. Product Data for all materials incorporated into the structure, including reinforcement, anchorage studs, forming accessories, curing materials and shotcrete materials. Shotcrete Nozzleman Certification, according to ACI C660 and the Certification Publication CP-60 for every nozzleman assigned to the project. Shotcrete Crew Supervisor's Qualifications for shotcrete work execution and placement. Contractor’s Shotcrete Experience Statement in shotcrete.
Submittal shall include shop drawings, details, and Quality Control (QC) Plan to include but not be limited to staff qualifications, construction procedures, detailed construction sequencing plans, and details of temporary debris shields. Submittals shall be submitted for review and approval by the Engineer a minimum of 45 days prior to the commencement of work.

The Contractors QC Plan shall detail the following:

1. Number and qualifications of personnel involved in shotcrete placement

2. Surface preparation method

3. Equipment and materials for placement, finishing and curing

4. Placement method including application rates, plans for multiple layers

where applicable, and methods for achieving required thickness and finish

5. Curing method

6. QC testing and inspection personnel

7. QC testing and inspection methods and frequencies including determinations of thickness and strength of placed shotcrete and checking for hollow areas and surface defects

8. Methods for correcting deficiencies in shotcrete thickness, strength, hollow areas and surface defects

The Contractor shall submit documentation substantiating that project personnel have appropriate qualifications. Inadequate documentation or substantiation of personnel qualifications will be cause for rejection of the QC Plan. Changes to previously approved personnel must be approved in writing. Shotcreting nozzle operators shall have at least one year of experience in the application of shotcrete and completed at least three projects of comparable nature or work under the immediate supervision of a foreman or instructor with at least two years of such experience. Documentation of nozzle operator's experience shall be submitted with the QC Plan.

Work shall not begin until the Contractor's QC Plan is approved. The Engineer will suspend the work if the Contractor substitutes unqualified personnel for approved personnel during construction or if work is found to be unsatisfactory during placement of shotcrete. Claims for additional time or compensation due to such cessation of operations will not be approved.

Installer Qualifications:

Any individual applying shotcrete must be certified as an ACI Shotcrete Nozzleman by the American Concrete Institute as outlined in ACI Certification publication CP-60;
Nozzle operator shall have a minimum of 3 years experience on a minimum of 5 previous projects of similar nature and the work should be performed under the supervision of a foreman/supervisor with a minimum of 3 years experience on a minimum of 5 previous projects of similar nature;
Before conducting field trials, the Contractor must submit written evidence of the qualifications of the nozzle operator and supervisor;
Each nozzle operator must demonstrate, using the specified material and the anticipated equipment, acceptable proficiency in applying shotcrete uniformly in both the vertical and overhead orientations;
Proficiency shall be demonstrated through the use of vertical and overhead test panels that reflect the actual jobsite conditions;
Core grading criteria is based on the criteria of ACI 506.2 "Specifications for Shotcrete". A test panel with any single core grade exceeding grade 3, or with more than 2 of the 5 cores having a grade of 3 will be declared a failure. Core grade shall not be averaged. In the event that the prospective nozzle operator fails to achieve the above criteria, he/she will be given one additional opportunity to demonstrate acceptable proficiency through test panels.
c. Shotcrete Placing Equipment Equipment used to place dry-mix shotcrete shall respect the recommendations of ACI 506R. Shotcrete placing equipment shall be capable of introducing materials to the delivery hose at a uniform rate with material exiting from the nozzle at a velocity

and a consistency that will ensure good adhesion to the surface with minimum rebound and optimal density of the in situ shotcrete.

The water supply system shall respect the recommendations of ACI 506R. It shall be capable of supplying the necessary amount of water, at the required pressure, through a manually operated liquid injection system (water ring) so that the nozzle operator can easily control the amount of water. If variations in water pressure cause fluctuations in shotcrete consistency, shotcrete application should be terminated until the situation is resolved.

A hydromix assembly shall be used to pre-dampen the shotcrete material. The contractor shall not use a continuous feed pre-dampener to achieve pre-dampening with Sika King RS-D1 SY.

The air supply system shall respect the recommendations of ACI 506R. It shall be capable of supplying clean air to the shotcrete machine and hose at the volumes and pressures recommended by the manufacturer of the equipment. No air supply system shall be used that is incapable of maintaining constant pressure or that delivers air contaminated by oil or humidity.

1. Dry Mix Process. The delivery equipment shall deliver a continuous, smooth uniformly mixed material to the nozzle. The nozzle shall be equipped with a water ring and valve to permit adjustment of the water. The nozzle shall be capable of delivering a conical discharge stream.

d. Pre-Construction Testing. An independent firm that is specialized in quality control testing will be retained to perform the preconstruction testing and inspections indicated below:

Produce test panels before shotcrete placement according to requirements in ACI 506.2 and ASTM C 1140 for each mix design, shooting orientation, and nozzle operator. Produce test panels with minimum dimensions of 24 x 24 x 6 inches. From each test panel, the testing agency shall obtain six (6) test specimens. The firm shall perform the following:

Test each set of cores sampled from an unreinforced shotcrete test panel for compressive strength according to ASTM C 1604, at the ages determined by the Engineer;
Visually inspect each set of cores taken from reinforced shotcrete test panels and determine core grades according to ACI 506.2.

Mock-up panels: Before installing shotcrete, construct mock-up panels for each finish required and for each mix design, shooting orientation, and nozzle operator to set quality standards for installation.

e. Placement of Shotcrete. Apply shotcrete according to ACI 506R and 506.2.Shotcrete shall be applied with the same equipment and the same technique as used to construct the approved test panels. The nozzle operator constructing the test panels shall be the same operator used in placing shotcrete in the work. The shotcrete shall be applied as dry as practicable to prevent shrinkage cracking, sagging and sloughing off.

Shooting guide strips or wires shall be employed to ensure square corners, straight lines and a plane surface of mortar, except as otherwise indicated on the Plans or approved by the Engineer. They shall be so placed to minimize trapping of rebound. The re-use of rebounded

materials is not allowed. Thickness measuring pins shall be installed on 5-foot centers in each direction. The pins shall be non-corrosive. Other methods to establish if the required minimum thickness of shotcrete is being applied may be approved if the Contractor can satisfactorily demonstrate the reliability of these other methods.

A sufficient number of mortar coats shall be applied to obtain the required thickness. On vertical and overhead surfaces, the thickness of each coat shall not be greater than 1 inch, except as approved by the Engineer, and shall be so placed that it will neither sag nor decrease the bond of the preceding coat. The time interval between successive layers in sloping, vertical or overhanging work, shall be sufficient to allow initial set but not final set to develop. At the time initial set is developing, the surface shall be cleaned to remove the thin film of laitance in order to provide for a bond with succeeding applications. Rebound or accumulated loose sand shall be removed from the surface by brooming or scraping to be covered prior to placing of the original or succeeding layers of mortar and shall not be embedded in the work. All laitance which has been allowed to take final set shall be removed by sandblasting and thoroughly cleaning the surfaces.

To achieve an SSD condition, care shall be taken to thoroughly wash down all previously hardened concrete with water and compressed air before shooting new material.

The wire fabric reinforcement shall be positioned to minimize vibration while the shotcrete is being applied. Lap mesh one and a half squares in both directions. Tie wires shall be bent flat in the plane of the mesh and not form large knots.

Horizontal and vertical corners and any area where rebound cannot escape or be blown free shall be filled first. Nozzle shall be held at such distance and angle to place material behind reinforcement before material is allowed to accumulate on its face. Do not place shotcrete through more than one layer of reinforcing steel in one application. Unless suitable means to screen the nozzle is provided, discontinue shotcreting if wind or air currents will cause separation of the stream during placement.

The Contractor shall check in the presence of the Engineer for hollow areas by hammer sounding. Hollow areas, and areas containing any other non-conforming work or defects, are deemed to be deficient areas. An approved repair method including proposed mitigation measures shall be used to correct deficient areas. The repair method shall be submitted by the Contractor for review and approval by the Engineer prior to commencement of any repair work. Deficient areas shall be corrected at the Contractor's expense. At the discretion of the Engineer, deficient areas shall be repaired after initial placement of the shotcrete is completed. All shotcrete defects, including but not limited to, lack of uniformity, segregation, honeycombing, lamination, or which contains any dry patches, slugs, voids, or sand pockets shall be removed and replaced with fresh shotcrete at the Contractor's expense.

Minimum Dimension: The minimum dimension of a shotcrete application accepted shall be 1-1/2" (38mm) or 2" (50 mm).

Multiple Lifts: When multiple layers are required, a minimum of 30 to 60 minutes is required before applying additional layers.

Multiple Lift Surface Preparation: Remove hardened overspray, rebound, and laitance from shotcrete surfaces to receive additional layers of shotcrete. Receiving surface shall be pre-wetted, leaving surface saturated but free of standing water, that is saturated surface dry (SSD).

Pre-dampening: A pre-dampener shall not be used.

Builders String Line Removal: Remove builder's string line or other alignment control devices after shotcrete placement.

Installation Tolerances: Place shotcrete without exceeding installation tolerances permitted by ACI 117, increased by a factor of 2.

f. Field Quality Control . The Contractor shall retain the services of an independent firm that is specialized in quality control testing to sample materials, visually grade cores, perform tests, and submit reports during the project. All reports of the retained firm must be signed and a copy sent to the Engineer.

Inspection: The Engineer will make a visual inspection of the substrate after surface preparation, in addition to each subsequent layer of shotcrete. At the frequency established by the Engineer, hammer sounding shall be done every 12" (300 mm) in two perpendicular directions.

Shotcrete Temperature: Conduct 1 test per hour when air temperature is 41° F and below, as well as when 86° F and above, in addition to 1 test for each set of compressive-strength specimens, in accordance with the ASTM C 1604 procedure. The temperature of fresh shotcrete material at the moment of placement shall be maintained between 50° F and 86° F.

Test Panels: Produce unreinforced test panels for each shotcrete mix at a frequency determined by the Engineer. Produce test panels with minimum dimensions of 24 x 24 x 6 inches, according to ASTM C 1140. From each test panel, testing agency shall obtain a minimum of three test specimens for compressive strength testing of a 3 inch diameter. The length to diameter ratio of the specimens shall be 1.0 or more. In addition, the panel shall not be cored until at least 3 days after it has been produced.

Core Sampling: Cores shall be taken in accordance with the requirements of ASTM C 1604 at randomly selected locations and at a frequency determined by the Engineer. Additional cores shall be taken from a test panel in accordance with the requirements of ASTM C 1140, at a frequency determined by the Engineer. Cores shall have a length to diameter ratio of 1.0 or greater and shall be taken when the shotcrete is a minimum of 3 days old. If any core shows inadequate bond with the substrate, or between layers, or displays obvious defects, or fails to meet specified compressive strength, two additional cores shall be taken within approximately 5 ft of the unacceptable core. If either of these cores show similar defects, the Engineer shall direct the contractor to remove the shotcrete in the surrounding area and replace it at no extra cost.

Air Content: The spacing factor of air-void system must not exceed 0.012-inches, as determined by the ASTM C 457 procedure.

Compressive Strength Testing: Determine the compressive strength according to ASTM C 1604 for each unreinforced core sampled at the frequency and the ages determined by the Engineer.

Defective Shotcrete: Shotcrete which lacks uniformity, exhibits segregation, honeycombing, delamination or cracking, poor bond between layers or with the substrate or which fails to meet the specified compressive strength shall be regarded as defective. The Engineer reserves the right to order the removal of the defective shotcrete and its replacement with acceptable shotcrete or the placement of additional shotcrete layers to compensate for the inadequacy of the in situ shotcrete material. The additional shotcrete shall be placed at the contractor's expense.

g. Limitation of Placement – Weather Conditions Cold-Weather Shotcreting: Place and protect shotcrete work, according to ACI 306.1, from any damage or reduction in compressive strength caused by frost, freezing, or low temperatures as follows:

Discontinue shotcrete when ambient temperature is below or expected to fall below 20° F within 6 hours following the application of shotcrete; When ambient temperature is below 41° F, material temperature should not be less than 70° F and not more than 86° F at the time of application; When ambient temperature is below 41° F, uniformly heat mixing water to a temperature of not less than 70° F and not more than 86° F ; Shotcrete shall not be applied to any surface whose temperature is less than 20° F ; The shotcrete incorporated in the structure must be maintained above a minimum temperature of 41° F for 7 consecutive days; Do not use frozen material or materials containing ice or snow; Do not use calcium chloride, salt, and other materials containing antifreeze agents. Contact the shotcrete manufacturer for more information regarding cold weather shotcreting specific to the shotcrete mix design.

Enclosures During Cold Weather: The contractor may enclose the work area and use appropriate heating equipment to establish required conditions, subject to strict safety requirements. All such heaters, electrical or otherwise, shall ensure good air quality, adequate protection against fires inside any enclosure and respect any other applicable code or legislation. Areas receiving shotcrete shall have adequate lighting; The local ventilation shall be adequate; Safe and adequate access shall be provided to facilitate the performance of the work, and any inspection or measurement of the work by the Engineer.

Hot-Weather Shotcreting: Place and protect shotcrete work, according to ACI 305.1, from any damage or reduction in compressive strength caused by hot-weather conditions and high temperatures as follows: Cool mixing water such to maintain the temperature of shotcrete between 50° F (10° C) and 86° F (30° C) during placement; Shotcrete should not be placed on a substrate with a temperature above 86° F (30° C); After the placement is complete, the shotcrete shall be protected against evaporation for 7 consecutive days.

h. Finish. All exposed surfaces shall be finished with a wood float, a magnesium trowel or a mechanical trowel with a rotating rubber head as defined by ACI 506. Pre-construction mock-up panels shall be produced and accepted by the Engineer prior to project start-up. Steel trowel finish is not recommended. **i. Curing.** Shotcrete shall be cured in accordance with ACI 308.1 and commenced curing immediately following finishing. Protect freshly placed shotcrete from premature drying, precipitations and excessive hot or cold temperatures, according to ACI 305.1 and 306.1. Two coats of a water-based curing compound which complies with ASTM C309 must be applied according to the manufacturer's specifications. If any subsequent layer of shotcrete needs to be added over the previous layer remove the curing compound. If the curing compound is not removed, it will act as a bond breaker between the shotcrete layers.

817.03.4 Application of Patching Mortar. Concrete patching mortar shall be mixed, applied and cured in strict accordance with the manufacturer's recommendations. All exposed surfaces shall be finished straight and true, approximating the original contour as close as practicable. The final finish shall be as indicated on the plans.

817.03.5 Application of Form and Cast-in-Place Concrete

a. General. Repairs accomplished by the form and cast-in-place method shall be performed in accordance with the applicable requirements of Section 808, CAST-IN-PLACE STRUCTURE CONCRETE MASONRY of these specifications.

b. Bonding to Existing Surfaces. Prior to placing the Cast-in-Place Concrete, surfaces shall be prepped in accordance with these specifications or as indicated on the Plans.

c. Use of Self Consolidating Concrete (SCC) in Form and Cast-in-Place Concrete. SCC concrete may be used for form and cast-in-place concrete repairs or as indicated on the plans. Concreting procedures shall be performed by personnel experienced with the placement of SCC mixes. All repair areas shall be adequately formed to contain the proposed SCC material, and all resulting holes from the required formwork fasteners shall be properly filled with an approved cementitious material. Special care shall be taken so that the form is properly sealed against leaks, since SCC is more fluid than standard mixes. If excessive surface voids are observed when stripping a form, further placements of the SCC shall cease until the mix and/or placement problem is identified and corrected to the satisfaction of the Engineer.

d. Final Finish. All exposed surfaces shall be finished straight and true, approximating the original contour as close as practicable. The final finish shall be as indicated on the plans.

817.03.6 Structural Concrete Crack Repair by Epoxy-Resin Base Adhesive Injection

a. General. Repairs for structural concrete crack repairs for dry structural cracks shall be performed in accordance with the applicable requirements of Section 836, STRUCTURAL CONCRETE CRACK REPAIR BY EPOXY-RESIN BASE ADHESIVE INJECTION of these specifications.

817.03.7 Repairs to Structure Concrete Masonry – Leaking or Wet Crack Repairs

a. General. Repairs to wet or leaking cracks shall be performed in accordance with the applicable requirements of Item 836.9901 to 836.9903 REPAIRS TO STRUCTURE CONCRETE MASONRY - LEAKING CRACK REPAIRS - C2 to C4of these specifications.

817.03.8 Repairs to Structural Steel

a. General. Repairs to structural steel shall be performed in accordance with the applicable requirements of Item 824 STRUCTURAL STEEL CONSTRUCTION of these specifications.

817.04 METHOD OF MEASUREMENT. Item Code 817.9901 Repairs to Structure Concrete Masonry – Spalls S1 will be measured by the number of “Square Feet” of new concrete actually placed in accordance with the Contract Documents and/or as directed by the Engineer. Reinforcement bar repairs “R1, R2, R3 and R4” will be included with the spall repairs. All items are measured complete in place, including all preparation, accessories and incidentals.

Item Code 817.9902 Repairs to Structure Concrete Masonry – Spalls S2 will be measured by the number of “Square Feet” of new concrete actually placed in accordance with the Contract Documents and/or as directed by the Engineer. Reinforcement bar repairs “R1, R2, R3 and R4” will be included with the spall repairs. All items are measured complete in place, including all preparation, accessories and incidentals.

Item Code 817.9903 Repairs to Structure Concrete Masonry – Spalls S3 will be measured by the number of “Square Feet” of new concrete actually placed in accordance with the Contract Documents and/or as directed by the Engineer. Reinforcement bar repairs “R1, R2, R3 and R4” will be included with the spall repairs. All items are measured complete in place, including all preparation, accessories and incidentals.

Item Code 817.9904 Repairs to Structure Concrete Masonry – Spalls S4 will be measured by the number of “Square Feet” of new concrete actually placed in accordance with the Contract Documents and/or as directed by the Engineer. Reinforcement bar repairs “R1, R2, R3 and R4” will be included with the spall repairs. All items are measured complete in place, including all preparation, accessories and incidentals.

Item Code 817.9905 Repairs to Structure Concrete Masonry – Shotcrete will be measured by the number of “CY” of new shotcrete concrete actually placed in accordance with the Contract Documents and/or as directed by the Engineer. All items are measured complete in place, including all preparation, accessories and incidentals.

817.05 BASIS OF PAYMENT. The accepted quantities of Code 817.9901 Repairs to Structure Concrete Masonry - Spalls S1 will be paid for at the respective contract unit prices per “Square Feet” as designated in the Proposal. The price so stated shall constitute full and complete compensation for all labor, materials, equipment, and all incidentals required to finish the work, complete in place and accepted by the Engineer.

The accepted quantities of Code 817.9902 Repairs to Structure Concrete Masonry - Spalls S2 will be paid for at the respective contract unit prices per “Square Feet” as designated in the Proposal. The price so stated shall constitute full and complete compensation for all labor, materials, equipment, and all incidentals required to finish the work, complete in place and accepted by the Engineer.

The accepted quantities of Code 817.9903 Repairs to Structure Concrete Masonry - Spalls S3 will be paid for at the respective contract unit prices per “Square Feet” as designated in the Proposal. The price so stated shall constitute full and complete compensation for all labor, materials, equipment, and all incidentals required to finish the work, complete in place and accepted by the Engineer.

The accepted quantities of Code 817.9904 Repairs to Structure Concrete Masonry - Spalls S4 will be paid for at the respective contract unit prices per “Square Feet” as designated in the Proposal. The price so stated shall constitute full and complete compensation for all labor,

materials, equipment, and all incidentals required to finish the work, complete in place and accepted by the Engineer.

The accepted quantities of Code 817.9905 Repairs to Structure Concrete Masonry - Shotcrete will be paid for at the respective contract unit prices per “CY” as designated in the Proposal. The price so stated shall constitute full and complete compensation for all labor, materials, equipment, and all incidentals required to finish the work, complete in place and accepted by the Engineer.

CODE 819.0900 DRILL AND SET CONCRETE EXPANSION ANCHORS

CODE 824.0710 STAINLESS STEEL FURNISH FABRICATE AND ERECT - ELECTRICAL CONDUIT AND LUMINAIRE SUPPORTS

DESCRIPTION: This work included under this item shall consist of furnishing and installing supports for electrical conduits and luminaires of the type and at the locations indicated on the Plans, or as directed by the Engineer, all in accordance with these Specifications.

MATERIALS: All materials shall be submitted to the Engineer for review and approval.

Electrical support structures: Electrical supports required to support the conduit and lighting systems shall be fabricated as complete as possible in the shop for delivery to the site. Supply all components required for anchorage of electrical support structures to tunnel structure. Fabricate anchorage points and related components of the same material and finish as the assembly, except where specifically noted otherwise. Supply and attach the electrical support, guide and anchor components for the conduit and the lighting support assemblies.

Stainless Steel (Type 316) Mounting support brackets shall be provided and be able to securely mount to the metal framing system made up of slotted channel, fittings, and hardware as defined the Metal Framing Manufacturers Association Standard Publication MFMA-1. All channels, fittings, and hardware shall be of Type 316 Stainless Steel. Metal Framing Channels shall be formed from 12-gauge cold rolled steel.

All channels shall have a nominal overall width of 1-5/8 inches with a 9/16-inch by 1-1/8-inch slot face opening. Lengths of the channels shall be as shown on the Plans. All testing and tolerances shall be in accordance with latest MFMA-1 Standard. The mounting support bracket shall engage the framing system at various intervals along longitudinal mounting support channel. The Type 316 stainless steel mounting support bracket shall have a neoprene gasket for dissimilar metal protection between the bracket and the main fixture housing, as defined in the Contract Documents.

Unistrut, and Cooper B-Line framing components are considered appropriate.

Luminaire Mounting: Furnish and install new structural supports for tunnel luminaires for each mounting type as shown on the plans. Hardware shall be Stainless-Steel 316 and conform to ASTM A276. All threaded rods, luminaire mounting, and any other use of stainless-steel nuts shall utilize NYLOC nuts.

Post Installed Mechanical Anchors: Furnish and install type 316 stainless steel conforming to ACI 355.2 or ICC-ES AC193.

SUBMITTALS:

1. Shopdrawings
2. Catalog cuts
3. Anchor certificates:
    1) ACI Evaluation Reports

2) ASTM Certifications
3) ICC-ES Evaluation Reports

4. Test Reports: Certified test reports showing compliance with specified performance characteristics and physical properties.
5. Installer Qualifications and procedures: Submit installer qualifications as specified herein. Submit a letter of procedure stating method of drilling, the product proposed for use, the complete installation procedure, manufacturer's training date, and a list of the personnel to be trained on anchor installation.
6. Installation and Field Quality Control methods, including method of locating embedded reinforcing steel.
7. Documentation:

1. Installation Inspection Record
2. Test Inspection Record: The test inspection record shall include, but not be limited to, the following information:

a. General location of anchor and group represented
b. Method of test or verification
c. Test results, accepted or rejected
d. Inspector's name
e. Date of test
f. Identification number of testing tool

3. Failed Anchor Documentation: Documentation for anchors is required for an anchor that does not pass the test acceptance criteria specified herein. Failed anchor documentation shall be submitted to the Engineer. The documentation shall include, but not be limited to, the following:

a. Exact location of failed anchor
b. Reason for failure
c. Repair steps taken
d. Inspector's name
e. Date of test

CONSTRUCTION METHODS: Post-installed anchors shall be installed in accordance with the ICC-ES reports and manufacturer's installation instructions. Where installation criteria differ, the order of precedence from highest to lowest is:

1. this Specification;
2. the ICC-ES reports;
3. the manufacturer's installation instructions.

Holes for post-installed anchors shall be drilled with carbide-tipped bits using rotary hammer drills meeting the requirements of ANSI B212.15 unless ICC-ES AC193 or ICC-ES AC308 testing demonstrates that using percussive drilling or another type(s) of bit, including core drills, is acceptable. Drilled holes shall be cleaned of chips, dust, loose material, and water prior to anchor installation. The hole diameters and depths shall be as recommended in the manufacturer's instructions. The hole diameter shall be checked every ten holes for conformance to the hole

tolerances specified in ICC-ES AC308 for adhesive anchors, ICC-ES AC193 or ACI 335.2 for mechanical anchors. Verify depth of the concrete member before drilling holes. The embedment depth of the post-installed anchor shall not exceed the greater of 2/3 of the concrete member thickness or the concrete member thickness minus 4-inches. Contact the Engineer if these requirements cannot be met based on the actual member thickness.

Anchors shall be installed perpendicular to the concrete surface within a plus or minus 5-degree tolerance. Post-installation verification of this criterion may be satisfied by visual inspection to verify proper seating of the nut and washer.

In areas where concrete has been removed, the minimum anchor embedment shall be measured from the surface of sound concrete.

Unless otherwise noted on the Contract Drawings, the spacing requirements indicated in the applicable ICC ES report shall be used.

Bending and welding of post-installed anchors is not permitted.

The nut thread engagement for the anchors (studs) shall be such that the bolt threads project past the outside face of the nut when completely installed.

The length identification code on the head of the anchor shall not be damaged during installation. Anchor projection may be cut-off subject to the approval of the Engineer and documentation of the location, embedment, and length code.

Unused anchors shall be driven in and cut-off flush. Cut-off anchors shall be considered an abandoned ungrouted hole for future anchor spacing requirements.

INSPECTION: All anchors shall be visually inspected in order to verify and document that they have been installed as specified herein. As a minimum, inspection attributes for post-installed anchors shall comply with the special inspection section of the applicable ICC-ES report (with the exception of validating the strength of existing concrete) plus additional attributes imposed by this Specification. These attributes of inspection shall be identified in the inspection report documentation.

If visual inspection reveals that the installed anchor does not meet the specified requirements, the anchor shall be relocated as permitted by this Specification, or shall be removed and replaced by another anchor, or referred to the Engineer for evaluation.

FIELD QUALITY CONTROL: Minimum anchor embedments, test (proof) loads, and torques shall be as shown on the approved shop drawings.
Testing of post-installed anchors shall be witnessed by the Inspector. Test of post-installed

anchors is mandatory.

Testing Method: Post-installed anchors shall be tested by the direct tension method as follows:

1. Direct Tension Method: A tensile load as defined herein below is applied. If the tension load is applied by jacking against the concrete, the jacking pressure is to be distributed outside of an area having its center at the post-installed anchor and its diameter, or least dimension, equal to the required anchor spacing as given in the ICC ES report. Post-installed anchors tested by this method shall be retightened by applying the installation torques.

2. Testing shall be in accordance with ACI 355.2 and ASTM E488.

Test (Proof) Load: Tension test (proof) load shall be as indicated on the approved shop drawings.

1. For post-installed adhesive anchors, the test shall be equal to the lesser of:

   a. A tensile load equal to 80-percent of the specified nominal yield strength of the anchor bolt material times the tensile area of the bolt; or
   b. A tensile load equal to twice the design load and at least 50-percent of the expected ultimate load based on the adhesive bond strength shown in the ICC-ES report, whichever is greater.

2. For post-installed mechanical anchors, the test load shall be a tensile load equal to 80-percent of the specified nominal yield strength of the anchor bolt material times the tensile area of the bolt.

Test Frequency: Unless otherwise specified, the following test frequencies shall apply:

1. Post-Installed Mechanical Anchors and post-installed adhesive anchors: 25% of all anchors per shift shall be tested. If testing shows any failures,
testing shall be increased to 100% until installation and testing results improve.
All anchors shall be tension-tested.

REPAIR AND RESTORATION OF DEFECTIVE WORK: Remove and replace misplaced or malfunctioning anchors. Fill empty anchor holes and patch failed anchor locations with high-strength non-shrink, nonmetallic grout. Anchors that fail to meet proof load or installation torque requirements shall be regarded as malfunctioning.

Abandoned holes shall be grouted with non-shrink grout. When post-installed anchors fail to meet the acceptance criteria under inspection and testing, the following repairs may be undertaken:

1. When failure is due to excessive anchorage pullout, contact the Engineer to evaluate the damage and approve a repair method. If approved, the anchor may be reset once prior to redrilling the hole and installing an anchor of equal size. Use the minimum spacing embedment depth, and installation torque required for the original anchor.
2. When failure is due to breaking of the anchor, slippage or loosening, bending, improper installation or poor attachment, remove the defective anchor, redrill

the hole, and install the same diameter anchor if the integrity of surrounding concrete has not been disturbed.

3. For cases where excessive slippage upon torqueing is experienced, or usage of the same hole is not possible, fill the existing hole with non-shrink grout and relocate the anchor location.

4. When failure is due to breakout of concrete around the anchor, the Engineer will develop an appropriate repair. Contact the Engineer to evaluate the damage and repair method. Local spalling of the concrete around the anchor, up to a maximum depth of 1/4-inch, is not considered a concrete breakout failure.

5. Mislocated anchors may be cut flush with concrete surface and need not be removed if they do not interfere with subsequent installations.

6. Mislocated anchors or anchors installed for temporary applications may be left in place. Those anchors that must be removed to accommodate other attachments, aesthetics, or safety of personnel may be removed completely or abandoned in place by cutting off beneath the surface after chipping the concrete 1-inch minimum and patching with epoxy grout. Mislocated anchors that will be covered by a base plate or an attachment may be cut-off flush with the concrete. In the event that an anchor must be removed from the hole and a new anchor installed, the removal and installation of the new anchor shall be in accordance with the manufacturer's specifications. The abandoned hole or removed concrete shall be filled with non-shrink grout.

7. Removal of installed anchors for inspection or replacement may be performed by using a bolt extractor as manufactured by Drillco Devices, Ltd., or approved equal.

8. Retest all replaced anchors as specified herein.

METHOD OF MEASUREMENT: Item Code 819.0900 Drill and Set Concrete Expansion Anchors - Post Installed Mechanical Anchors will be measured by the each. Item Code 824.0710 Stainless Steel Furnish Fabricate and Erect - Electrical Conduit and Luminaire mounting will be measured by the number of pounds of each type and configuration actually provided in accordance with the Plans and /or as directed by the Engineer. The weight of metal shall be computed on the basis of a unit weight of 490 pounds per cubic foot.

BASIS OF PAYMENT: Payment for Item Code 819.0900 Drill and Set Concrete Expansion Anchors - Post Installed Mechanical Anchors will be paid for by the each. The price so stated constitutes full and complete compensation for all lobar materials, and equipment, including fabricating, delivering, erecting, and all incidentals required to finish the work, complete and accepted by the engineer. Payment for Item Code 824.0710 Stainless Steel Furnish Fabricate and Erect - Electrical Conduit and Luminaire mounting will be paid for at the contract unit price per pound as listed in the Proposal.

.

CODE 824.9901
STAINLESS STEEL DOORS AND FRAMES, DOOR HARDWARE, SEALANT

824.9901.01 DESCRIPTION. This work consists of furnishing and the complete installation of the insulated stainless-steel door, door hardware, and perimeter sealant for the Electrical Room located near the west portal entrance of the East Side Tunnel. Refer to Electrical Room Plans and Detail Drawings.

824.9901.02 SUBMITTALS.
a. Product Data: Submit manufacturer's technical data for each product. Shop drawings shall include elevations for door type and frame details for frame type, including dimensional profiles and metal thicknesses.

b. Samples: Finishes for type of exposed finish required, prepared on Samples of not less than 3 by 5 inches.

c. Door hardware and keying schedule

d. Sample warranty.

824.9901.03 COORDINATION.
a. Coordinate anchorage installation for stainless steel frames. Furnish setting drawings, templates, and directions for installing anchorages, including sleeves, concrete inserts, anchor bolts, and items with integral anchors. Deliver such items to Project site in time for installation.

b. Preinstallation Meetings: Conduct conferences at East Side Tunnel, West Portal Entrance Electrical Room, Providence, Rhode Island.

824.9901.03 QUALITY ASSURANCE.

824.9901.03.1 Qualification Data.

a. Product test reports.

b. Field quality reports.

c. Installer Qualifications: Supplier of products and an employer of workers trained and approved by product manufacturers and of an Architectural Hardware Consultant who is available during the course of the Work to consult Contractor, Architect, and Owner about door hardware and keying.

1. Scheduling Responsibility: Preparation of door hardware and keying schedule.

d. Architecture Hardware Consultant Qualifications: A person who is experienced in providing consulting services for door hardware installations that are comparable in material, design, and extent to that indicated for this Project and who is currently certified by DHI as an Architectural Hardware Consultant.

824.9901.03.2 Delivery, Storage and Handling.

a. Deliver doors and frames palletized, wrapped, or crated to provide protection during transit and Project-site storage. Do not use non-vented plastic.

b. Store doors and frames under cover at Project site. Place units in a vertical position with heads up, spaced by blocking, on minimum 4 inch high wood blocking. Avoid using non-vented plastic or canvas shelters that could create a humidity chamber.

824.9901.03.3 Project Conditions.

a. Field Measurements: Verify actual dimensions of openings by field measurements before fabrication.

824.9901.04 WARRANTY.

a. Special Warranty: Manufacturer agrees to repair or replace components of door hardware that fail in materials or workmanship within specified warranty period.

1. Warranty Period: Three (3) years from date of Substantial Completion unless otherwise indicated.

824.9901.05 PRODUCTS.

824.9901.05.1 Manufacturers. Subject to compliance with requirements, available manufacturers offering products that may be incorporated into the Work included, but are not limited to, the following:

a. Door & Frame:

1. Titan Metal Products
2. Ceco Door Products
3. Grainger
4. or approved equal.

b. Door Hardware: Refer to Section 824.9901.08

824.9901.06 STAINLESS STEEL DOORS AND FRAMES.

a. Construct stainless steel door and frame assemblies to comply with NAAMM-HMMA 866 for the application indicated, including materials, fabrication methods, hardware reinforcement, tolerances, and clearances, and as specified. Comply with ANSI/SDI A250.4, for Physical Performance Level A.

b. Doors and Frames for Moderately Corrosive Environments: Electrical Room.

1. Stainless Steel Doors:
    a. Type: As indicated in the Drawings
    b. Thickness: 1-3/4 inches

c. Face Sheets: Type 316 stainless steel sheet, minimum thickness 0.050 inch.

d. Edge Construction: Continuously welded with no visible seam.

e. Top and Bottom Edges: Closed with continuous stainless-steel channels with minimum thickness of 0.062 inch welded to face sheets.

1. Provide flush top and bottom closures for exterior doors, with weep holes at bottom edge.

f. Stainless Steel Frames: Materials – Type 316 stainless steel sheet

g. Door Frames for Openings 48 Inches Wide or Less: Fabricate from stainless steel sheet, minimum thickness 0.062 inch.

h. Hardware Reinforcement: Stainless steel sheet

i. Finish: ASTM A480/A480M No. 4 Directional Satin.

824.9901.07.1 Materials.

a. Stainless-Steel Sheet: ASTM A240/A240M, austenitic stainless steel, Type 316 as indicated.

b. Steel Sheet: ASTM A1008/A1008M or ASTM A1011/A1011M, Commercial Steel (CS), Type B.

c. Metallic Coated Steel Sheet: ASTM A653/A653M, Commercial Steel (CS), Type B; with minimum G60 (Z180) or A60 (XF180) metallic coating.

d. Foam Plastic Insulation: Manufacturer's standard polystyrene board insulation with maximum flame-spread and smoke-developed indexes of 75 and 450, respectively, according to ASTM E84. Enclose insulation completely within door.

e. Mineral Fiber Insulation: Insulation composed of rock-wool fibers, slag-wool fibers, or glass fibers.

824.9901.07.2 Frame Anchors.

a. Provide anchors minimum size and type required by applicable door and frame standard, and suitable for performance level indicated.

b. Post-installed Expansion Anchor: Minimum 3/8 inch diameter bolts with expansion shields or inserts, with manufacturer's standard pipe spacer.

c. Numbering and Spacing:

1. Post-installed Expansion Type: Locate anchors not more than 6 inches from top and bottom of frame. Space anchors not more than 26 inches o.c.

d. Floor Anchors: Provide floor anchors for each jamb and mullion that extends to floor.

1. Floor Anchors for Concrete Slabs with Underlayment: Adjustable-type anchors with extension clips, allowing not less than 2-inch height adjustment. Terminate bottom of frames at top of underlayment.

e. Material:

1. Stainless steel sheet. Same type as door face.

824.9901.08 DOOR HARDWARE.

824.9901.08.1 HINGES

a. Hinges: BHMA A156.1. Provide template produced hinges for swinging doors where scheduled.

1. Manufacturers: Subject to compliance with requirements, provide products by one of the following:

a. Hager

b. Schlage

c. Or approved equal

824.9901.08.2 SELF CLOSING HINGES AND PIVOTS.

a. Self Closing Hinges and Pivots: BHMA A156.17.

1. Hager

2. Schlage

3. Or approved equal

824.9901.08.3 MECHANICAL LOCKS AND LATCHES.

a. Lock Functions: Non-keyed passage latch, function 10

b. Lock Throw: Comply with testing requirements for length of bolts required for labeled fire doors, and as follows:

1. Bored Locks: Minimum ½ inch latchbolt throw.

c. Lock Backset: 2-3/4 inches unless otherwise indicated.

d. Strikes: Provide manufacturer's standard strike for each lock bolt or latch bolt complying with requirements indicated for applicable lock or latch and with strike box and curved lip extended to protect frame; finished to match lock or latch.

e. Bored Locks: BHMA A156.2; Grade 1; ADA compliant

1. Hager

2. Schlage

3. Sargent

4. Or approved equal

f. Gate Keeper Lock: Stainless steel multi-user access allowing for multiple padlocks.

1. Gate Keeper

2. Or approved equal

824.9901.09 AUXILIARY LOCKS.

a. Padlock: Type 316 stainless steel; master keying

1. Hager

2. Schlage

3. Or approved equal

b. Hasp/Steel Angle: 2”x2”x3/8” thick and 2” high, Type 316 stainless steel angle with round hole to facilitate installation and removal of “Gate Keeper” lock. Refer to door detail drawings.

1. Gate Keeper

2. Or approved equal

824.9901.10 KEYING.

a. Keying System: Factory registered, complying with guidelines in BHMA A156.28, appendix. Provide one extra key black for each lock. Incorporate decisions made in keying conference.

1. Padlock System: Provide maximum four (4) padlocks with keys

b. Keys: Nickel silver

1. Stamping: Permanently inscribe each key with visual key control number and include the following notation:

a. Notation: “DO NOT DUPLICATE”

824.9901.11 OPERATING TRIM.

a. BHMA A156.6; stainless steel uncles otherwise indicated.

824.9901.12 THRESHOLDS.

a. BHMA A156.21; fabricated with inserted vinyl weather stripping to full width of opening indicated.

824.9901.13 WEATHER-STRIPPING.

a. BHMA A156.22 Bronze with vinyl seal, flame and smoke rated. Air infiltration tested to ASTM E283.

824.9901.14 DOOR FABRICATION.

a. Stainless Steel Door Fabrication: Provide doors rigid and free of defects, warp, or buckle. Accurately form metal to required sizes and profiles, with minimum radius for thickness of metal.

1. Tolerances: Fabricate doors to tolerances indicated in NAAHM-HMMA 866.

2. Stops and Moldings: Factory cut openings in doors. Provide minimum 0.038 inch thick, stainless-steel stops and moldings around glazed lites. Form corners of stops and moldings with butted or mitered hairline joints.

3. Hardware Preparation: Factory prepare stainless-steel doors to receive templated mortised hardware; include cutouts, reinforcement, mortising, drilling, and tapping.

a. Reinforce doors to receive non-templated mortised and surface-mounted door hardware.

b. Locate hardware as indicated, or if not indicated, according to HMMA 831, “Recommended Hardware Locations for Custom Hollow Metal Doors and Frames”.

c. Tolerances: Fabricate doors to tolerances indicated in ANSI/NAAMM-HMMA 866.

b. Stainless-Steel Frame Fabrication: Fabricate stainless-steel frames to be rigid and free of defects, warp, or buckle. Accurately form metal to required sizes and profiles, with minimum radius for thickness of metal. Where practical, fit and assemble units in manufacturer’s plant. To ensure proper assembly at Project site, clearly identify work that cannot be permanently factory assembled before shipment.

1. Weld flush face joints continuously; grind, fill, dress, and make smooth, flush, and invisible. Where frames are fabricated in sections due to shipping or handling limitations, provide alignment plated or angles at each joint, fabricated from same thickness metal as frames.

c. Provide countersunk, flat, or oval-head exposed screws and bolts for exposed fasteners unless otherwise indicated.

d. Stops and Moldings: Provide stops for installation with countersunk flat or oval head machine screws spaced uniformly not more than 9 inches o.c. and not more than 2 inches o.c. from each corner.

824.9901.15 FINISHES.

a. Stainless Steel Finishes: Remove tool and die marks and stretch lines, or blend into finish. Grind and polish surfaces to produce uniform finish, free of cross scratches. When polishing is completed, passivate and rinse surfaces. Remove embedded foreign matter and leave surfaces chemically clean.

b. Grain Direction: For finishes exhibiting grain, run grain vertically on door faces and frame jambs.

c. Door Hardware: Provide finishes complying with BHMA A156.18 as indicated in door hardware section of this specification.

824.9901.16 ACCESSORIES.

a. Mineral-Fiber Insulation: Insulation made of rock-wool fibers, slag-wool fibers, or glass fibers.

824.9901.17 PERIMETER SEALANT FOR DOORS

a. Compatibility: Provide sealants, backing, and other related materials that are compatible with one another and with joint substrates under conditions of service and application, as demonstrated by joint-sealant manufacturer, based on testing and field experience.

b. Silicone Joint Sealants: Single-component, Nonsag, Neutral-Curing Silicone Joint Sealant: ASTM C920, Type S, Grade NS, Class 50, for Use NT, G, A, and O; SWRI validation.

1. Basis of Design Product: Dow Crowning 795 Silicone Building Sealant (a one-component, medium modulus, neutral-cure silicone sealant suitable for weatherproofing porous stone, metal panels, curtain wall framing, and other above-grade expansion and control joints for both new and remedial construction.

2. Gun Grade two component Elastomeric, Polysulfide based sealant

3. Hardness, ASTM C661: 35-45 durometer Shore A.

4. Volatile Organic Compound (VOC) Content; 32 g/L maximum.

5. Staining, ASTM C1248: Non n concrete, granite limestone, and brick.

6. Color: As selected by Architect from manufacturer’s full line of not less than 10 colors.

b. Colors of Exposed Joint Sealants: As indicated by manufacturer’s designations.

c. Installation: Comply with joint-sealant manufacturer's written installation instructions for products and applications indicated, unless more stringent requirements apply. Comply with recommendations in ASTM C1193 for use of joint sealants as applicable to materials, applications, and conditions indicated.

1. Clean off excess sealant or sealant smears adjacent to joints as the Work progresses by methods and with cleaning materials approved in writing by manufacturers of joint sealants and of products in which joints occur.

2. Protect joint sealants during and after curing period from contact with contaminating substances and from damage resulting from construction operations or other causes so sealants are without deterioration or damage at time of Substantial Completion. If, despite such protection, damage or deterioration occurs, cut out, remove, and repair damaged or deteriorated joint sealants immediately so installations with repaired areas are indistinguishable from original work.

d. Perimeter Seal Installation

1. Measure door frame head.

2. Cut the Part to extend the fill width of the opening, leaving the gasketing material slightly longer than the metal retainer for a snug seal

3. With the use of a self-closing mechanism, allow the door to close.

4. Position the gasketing material with light pressure against the door.

5. Attach with sheet metal screws to the center of the slotted holes in the metal retainer. Tighten in place once gasket is in place.

6. Measure door frame sides. Attach the two side jambs in the same manner as the door frame head. Tighten all screws.

7. Adjust to keep a fit snug and to not inhibit the door from self-closing or latching.

824.9901.18 EXECUTION.

824.9901.18.1 Preparation.

a. Protect adjacent mosaic tilework. Examine substrate, areas, and conditions, with Installer present, for compliance with requirements for installation tolerances and other conditions affecting performance of stainless steel doors and frames. Examine roughing in for embedded and built in anchors to verify actual locations of stainless steel, door and frame connections before frame installation. Proceed with installation only after unsatisfactory conditions have been corrected.

b. Remove welded-in shipping spreaders installed at factory. Restore exposed finish by grinding, filling, and dressing, as required to make repaired area smooth, flush, and invisible on exposed faces.

c. Prior to installation and with installation spreaders in place, adjust and securely brace stainless steel door frames for squareness, alignment, twist, and plumb to the following tolerances:

1. Squareness: Plus or minus 1/16 inch measured at door rabbet on a line 90 degrees from jamb, and perpendicular to frame head.

2. Alignment: Plus or minus 1/16 inch measured at jambs on a horizontal line parallel to plane of wall.

3. Twist: Plus or minus 1/16 inch measured at opposite face corners of jambs on parallel lines, and perpendicular to plane of wall.

4. Plumbness: Plus or minus 1/16 inch measured at jambs on a perpendicular line from head to floor.

d. Drill and tap doors and frames to receive nontemplated mortised and surface-mounted door hardware.

824.9901.18.2 Installation.

a. Stainless Steel Frames: Set frames accurately in position; plumbed, aligned, and braced securely until permanent anchors are set. After wall construction is complete, remove temporary braces, without damage to completed Work.

b. Floor Anchors: Secure with post-installed expansion anchors.

1. Set floor anchors with post-installed expansion anchors.

2. Solidly pack mineral fiber insulation inside frames.

3. In-Place Masonry Construction: Secure frames in place with post-installed expansion anchors.

4. Installation Tolerances: Adjust stainless steel frames for squareness, alignment, twist, and plumb to the following tolerances:

a. Squareness: Plus or minus 1/16 inch measured at door rabbet on a line 90 degrees from jamb, and perpendicular to frame head.

b. Alignment: Plus or minus 1/16 inch measured at jambs on a horizontal line parallel to plane of wall.

c. Twist: Plus or minus 1/16 inch measured at opposite face corners of jambs on parallel lines, and perpendicular to plane of wall.

d. Plumbness: Plus or minus 1/16 inch measured at jambs on a perpendicular line from head to floor.

5. Seal joints between frame and masonry wall. Refer to Section 824.9901.17 for additional requirements.

d. Stainless Steel Doors: Fit and adjust stainless steel doors accurately in frames within clearances specified below:

e. Door Hardware

1. Mounting Heights: Mount door hardware units at heights indicated on Drawings unless otherwise indicated or required to comply with governing regulations.

2. Install each door hardware item to comply with manufacturer's written instructions. Where cutting and fitting are required to install door hardware onto or into surfaces that are later to be painted or finished in another way, coordinate removal, storage, and reinstallation of surface protective trim units with finishing work. Do not install surface-mounted items until finishes have been completed on substrates involved.

3. Hinges: Install types and in quantities indicated in door hardware schedule, but not fewer than the number recommended by manufacturer for application indicated or one hinge for every 30 inches of door height, whichever is more stringent, unless other equivalent means of support for door, such as spring hinges or pivots, are provided.

4. Latch Set: Install construction cores to secure building and areas during construction period.

5. Thresholds: Set thresholds for exterior doors and other doors indicate in fill bed of sealant complying with requirements specified in Sealant section of this specification.

6. Perimeter Gasketing: Apply to head and jamb, forming seal between door and frame. Do not notch perimeter gasketing to install other surface-applied hardware.

7. Door Bottoms: Apply to bottom of door, forming seal with threshold when door is closed.

824.9901.19 FIELD QUALITY CONTROL.
a. Inspection Agency: Owner will engage a qualified inspector to perform inspections and to furnish reports to Architect.

b. Repair and remove and replace installations where inspections indicate that they do not comply with specified requirements.

c. Reinspect repaired or replaced installations to determine if replaced or repaired door assembly installations comply with specified requirements.

824.9901.20 ADJUSTING AND CLEANING.

a. Stainless Steel Touchup: Immediately after erection, smooth any scratched or damaged areas of stainless steel; polish to match undamaged finish.

b. Door Hardware Adjustments: Adjust and check each operating item of door hardware and each door to ensure proper operation or function of every unit. Replace units that cannot be adjusted to operate as intended. Adjust door control devices to compensate for final operation or heating and ventilating equipment and to comply with referenced accessibility requirements.

824.9901.21 DOOR HARDWARE SET.

a. Hardware Set 1: Electrical door to have the following:

1.5 Pr Hinges

1 Threshold

1 set Perimeter Gasketing and Sealant, Weatherstripping

1 set Hasp/Steel Angles

1 set Gate Keeper Lock

Padlocks (4 max)

1 Drip Edge PEMKO 346C36 Clear Anodized Door Drip Edge; Aluminum Rain, Drip Cap

824.9901.22 METHOD OF MEASUREMENT. "Stainless Steel Doors and Frames, Door Hardware, Sealant" will be measured by the number of units actually placed in accordance with the Contract Documents and/or as directed by the Engineer. All items are measured complete in place, including all preparation, accessories, and incidentals.

824.9901.23 BASIS OF PAYMENT. The accepted quantities of "Stainless Steel Doors and Frames, Door Hardware, Sealant" will be paid for at the respective contract unit prices by each.

The price so stated shall constitute full and complete compensation for all labor, materials, equipment, and all incidentals required to finish the work, complete in place and accepted by the Engineer.

CODE 824.9902
BUS SHELTER CAST COLUMN

824.9902.01 DESCRIPTION. This work consists of furnishing, fabricating, and erecting the structural steel casting required for the bus shelter replacement column as indicated in the Plans, all in accordance with these Specifications. The reconstructed column shall be identical in appearance to the remaining columns and shall be supported as shown in the Plans.

824.9902.02 MATERIALS. Materials for bus shelter replacement column shall conform to the following requirements.

a. **Steel Castings** shall conform to the requirements of AASHTO M103 (ASTM A27), Class 70 or Grade 70-36 Steel and as outlined in Subsection M05.05.9 of the Standard Specifications.

824.9902.03 CONSTRUCTION METHODS. The bus shelter replacement column shall be accurately positioned at the location shown on the Plans and shall be a replacement in-kind from original construction. Supporting temporary shoring to be installed for bus shelter elements to facilitate the installation of the replacement cast column.

824.9902.03.1 Submittals. Product Data: Submit manufacturer's technical data for each product indicated including recommendations for their application and use. Include test reports, mockups and prototypes substantiating that products comply with requirements. Shop Drawings: Submit shop drawings of cast column for Engineer approval.

824.9902.03.2 Preinstallation Meetings. Conduct conference at East Side Tunnel, bus shelter at the West Portal entrance, Providence, Rhode Island.

824.9902.03.3 Testing. Perform appropriate testing of castings to check for defects or that any defects are within agreed dimensional and shrinkage tolerances. Ensure that prototype follows the design intent, size, surface finishing, soundness and expected loads.

824.9902.03.4 Final Casting and Cleaning. Cleaning: Gentle cleaning methods and systems shall be used so to not damage the cast. Final Finishing: Ensure that all castings are blast-cleaned or otherwise effectively cleaned of scale and sand to present a smooth, clean, and uniform surface.

824.9902.03.5 DELIVERY, STORAGE AND HANDLING. Deliver materials to site in manufacturer's original and unopened containers and packaging, bearing labels as to type and names of products and materials. Protect column parts and materials during storage and construction from wetting by rain, snow, or ground water, and from staining or intermixture with materials. Comply with manufacturer's recommendations for minimum and maximum temperature requirements for storage.

824.9902.03.5 EXECUTION. Installation: Erect cast column to accurate grades and alignment, carefully support column to prevent movement. Provide temporary shoring to existing

bus shelter elements as needed. Clean cast column thoroughly before painting. Paint cast column as specified in Section 842.9901.

824.9902.04 METHOD OF MEASUREMENT. "Bus Shelter Cast Column" will be measured by each column completion in accordance with the Contract Documents and/or as directed by the Engineer. All items are measured complete in place, including all preparation, accessories, and incidentals.

824.9902.05 BASIS OF PAYMENT. The accepted quantities of "Bus Shelter Cast Column" will be paid for at the respective contract unit prices per each as listed in the Proposal. The prices so-stated constitute full and complete compensation for all labor, materials, and equipment and for all incidentals required to finish the work, complete and accepted by the Engineer.

CODE 825.9901
STRUCTURAL FIRE PROTECTION

825.9901.01 DESCRIPTION. This work consists of furnishing and installing structural fire protection to the structural steel supporting the Rhode Island School of Design at the West portal of the tunnel.

825.9901.01.2 Applicable Specifications.

A. Reference standards shall be as enumerated below:

1. NFPA-502 Standard for Road Tunnel Bridges and Other Limited Access Highway, 2011 Edition

825.9901.02 MATERIALS.

A. Fire Proofing: Provide GCP Applied Technologies Inc. (GCPAT) Monokote Z-156T high density, cementitious fireproofing providing a 3-hour fire rating and complying with NFPA 502, Sections 7.3.4 and A.7.3.2. The fire protection material shall satisfy the following:

1. Be resistant to freezing and thawing
2. Withstand dynamic suction and pressure loads
3. Withstand both hot and cold thermal shock from fire exposure and hose streams
4. Meet all applicable health and safety standards
5. Not become a fire hazard during a fire
6. Be resistant to water ingress
7. Be noncombustible in accordance with ASTM E136
8. Have a minimum melting temperature of 1350°C
9. Meet the fire protection requirements with less than 5% humidity by weight and when fully saturated with water
10. Bond strength of a minimum 10,000 psf per ASTM E736

B. Z-Clips: Metal deck shall be attached to bridge stringers with Z-clips. Clips shall be made from a minimum 1/8 inch galvanized bent plate, spaced a maximum 14 inches on center with a minimum of 2 clips per panel, at each end.

C. Mesh: Minimum 3.4 lbs. per sq. yard expanded steel lath lapped 2 in. at joints and attached to steel stringers with powder actuated fasteners and washers, spaced 18 inches on center.

825.9901.03 SUBMITTALS.

A. Product Data: Submit manufacturer’s product data and installation instructions.

B. Evidence: Submit evidence that the fire protection board meets NFPA-502-2011 requirements.

C. Shop Drawings: General shop drawings illustrating typical aspects of the complete system and to illustrate installation and finished details. General shop drawings shall indicate the dimensional clearance requirements for the systems. Drawings shall be stamped by a Professional Engineer licensed in Rhode Island.

D. Samples: Submit 24” x 24” sample of the fireproofing material

E. Quality Assurance/Control Submittals: Submit manufacturer product certification, stamped by a Professional Engineer licensed in Rhode Island.

825.9901.04 DELIVERY, STORAGE & HANDLING.

A. Delivery: Deliver materials in manufacturer’s original, unopened, undamaged containers with identification labels intact.

B. Storage and Protection: Store materials protected from exposure to harmful environmental conditions and at temperature and humidity conditions recommended by the manufacturer.

825.9901.05 WARRANTY.

A. Warranty material and workmanship for a period of 10 years. The warranty period shall commence from the date of Substantial Completion.

B. Warrant the replacement of defective components/ materials and/or correct defective work when given notice by the Owner during the warranty period.

C. Warranty excluded liability for consequential, incidental, or special damages due to vandalism, misuse or acts of God.

D. Warranty repairs shall be provided at no cost. This shall include but not be limited to all repairs and/or replacement of defective components/material, all labor charges, all travel costs and vehicle charges.

825.9901.06 CONSTRUCTION METHODS.

A. Strictly comply with manufacturer’s written instructions for installation.

B. Protect fireproofing system from damage during subsequent construction activity.

825.9901.07 METHOD OF MEASUREMENT. Item Code 825.9901 “Structural Fire Protection” will be measured by the number of “Square Feet” of structural steel actually protected in accordance with the Plans and/or as directed by the Engineer.

825.9901.08 BASIS OF PAYMENT. Section 825.9901 “Structural Fire Protection” will be paid for at the contract unit price per square foot as listed in the Proposal. The price so stated constitutes full and complete compensation for all labor, handling, storage, hauling, and disposal, and for all other incidentals required to finish this work, as discussed in these provisions.

CODE 830.9901
MIRROR DEFLECTOR – STRUCTURAL STEEL

830.9901.01 DESCRIPTION. This work consists of furnishing and installing structural steel mirror deflector assemblies at the height and locations indicated on the Plans, all in accordance with these Specifications.

830.9901.01.2 Applicable Specifications. All structural steel work shall conform to the applicable requirements of SECTION 824 STRUCTURAL STEEL, the respective current editions of the AASHTO Standard Specifications for Highway Bridges and the AWS D1.5 Bridge Welding Code.

830.9901.02 MATERIALS. Materials for mirror deflectors shall conform to the following requirements.

a. **Steel Plates and Channel Sections** shall conform to the requirements of AASHTO M270, Grade 36.

b. **Anchorage System.** Anchors shall be a minimum ¾ inch diameter and shall be listed on the Department's approved materials list. Each anchor must be capable of developing a minimum of 6,000 pounds tension and 2500 pounds shear, with the number of anchors and spacing as shown on the Plans. Anchors shall be installed per manufacturer's recommendations.

   All anchors, nuts and washers shall conform to ASTM A325 and shall be galvanized according to ASTM A153. All bolts, anchors, nuts, and washers shall conform to the applicable requirements of Subsection M.05.04.4 of these Specifications except as modified by the Plans.

   Other anchorage systems may be used in lieu of above only upon approval of the Engineer.

c. **Galvanizing:** When specified on the Plans or in the Special Provisions, steel plates and channel assemblies shall be galvanized after fabrication in accordance with the requirements of AASHTO M111.

830.9901.03 CONSTRUCTION METHODS. The mirror deflector assemblies shall be accurately positioned at the locations shown on the Plans. The mirror deflector assemblies shall be installed parallel to the roadway surface at the height shown on the Plans. The steel plates of the mirror deflector assemblies shall be installed in one piece at each location.

The anchor bolts shall extend or be trimmed to a proper grip for the nut.

830.9901.04 METHOD OF MEASUREMENT. "Mirror Deflector" will be measured by each unit actually installed in accordance with the Plans and/or as directed by the Engineer.

830.9901.05 BASIS OF PAYMENT. The accepted quantities of "Mirror Deflector" will be paid for at the respective contract unit prices per each as listed in the Proposal. The prices so-stated

constitute full and complete compensation for all labor, materials, and equipment and for all incidentals required to finish the work, complete and accepted by the Engineer.

CODE 836.9901 REPAIRS TO STRUCTURE CONCRETE MASONRY - LEAKING CRACK REPAIRS – C2

CODE 836.9902 REPAIRS TO STRUCTURE CONCRETE MASONRY - LEAKING CRACK REPAIRS – C3

CODE 836.9903 REPAIRS TO STRUCTURE CONCRETE MASONRY - LEAKING CRACK REPAIRS – C4

DESCRIPTION: This Section specifies requirements for using chemical grout to stop the ingress of water into underground structures by either; stopping flowing water, filling voids, sealing cracks and joints, creating a curtain in the surrounding soil or combinations of these techniques.

This section applies to remedial repair of new construction and repair of existing construction under this contract in cases where slurry walls, concrete, or water proofing applications do not meet the specified watertightness.

PERFORMANCE REQIREMENTS: Provide and install products to address the ingress of water in these three conditions:

TYPE I - Stopping of flowing water or filling of voids
TYPE II - Injection into cracks and joints
TYPE III - Creating an external curtain wall

Refer to the Contract Drawings to determine which condition exists at each required repair location:

TYPE I - Flowing water or filling of voids should be addressed with high expansion polyurethane.

TYPE II - Cracks and joints should be addressed with either flexible polyurethane or methacrylic acrylate depending on the width of the crack.

TYPE III - Curtain wall grouting should be addressed with methacrylic acrylate injected into the soil around the structure. This type of grouting should be used in areas where multiple leaking cracks exist in close vicinity.

A leak will be considered sealed when leakage does not exceed 0.001 gallons per day where a leak is visible to the public and 0.01 gallons per day where a leak is not visible to the public.

SUBMITTALS:

1. Submit manufacturer products data. Submit installation instructions, use limitations and recommendations for proper use of the grout materials, and provide the manufacturers current printed literature on specified products.
2. Submit a list of equipment and a detailed procedure for the installation.
3. Submit names and qualification of installer and manufacturer's field representative.
4. Furnish documentation of quantities and batch numbers of materials used at each location.
5. Submit a detailed grouting plan to indicate which procedure will be followed when addressing Type I, Type II, or Type III conditions.

QUALITY ASSURANCE: The manufacturer of the specified products shall have an established program of training, certifying, and technically supporting general contractors. The manufacturer shall have a minimum of ten-year history of domestic production of chemical grout. The manufacturer shall produce the product at their own facility. If a subcontractor or outside vendor is used for production of chemical grout, the manufacturer shall employ an inspector to monitor production standards at the vendor's plant. The manufacturer shall mark all products with batch numbers, date of manufacturer, and maintain records of all materials produced.

The installer shall be accepted by the manufacturer of the specified product, shall have completed a program of instruction in the use of the specified repair material, shall provide certification from the manufacturer attesting to being an approved installer, and shall be able to demonstrate past performance on at least five (5) jobs of similar scope and size which have performed satisfactorily for a minimum of 3 years.

MANUFACTURER AND FIELD REPRESENTATIVE: The Contractor shall arrange with the materials manufacturer to have the services of competent field representatives at the work site prior to start of grouting work to ensure proper application procedures. The representative shall remain at the job site after work commences and continue to instruct until the representative, the contractor, and the Engineer are satisfied that the crew is installing the system successfully. The representative shall make periodic visits to the project as the work progresses and shall confer on each visit with the Contractor and Engineer.

The manufacturer field representative shall verify the Contractors quality control procedures and documentation.

PRODUCT DELIVERY, STORAGE AND HANDLING: Deliver the specified products in original, unopened containers with the manufacturer's name, labels product identification, and batch numbers.

Store the specified products in condition as recommended by the manufacturer but at a minimum store dry at 40-90 degrees F. Material shall be 60-85 degrees F before using. Protect against freezing. Discard any frozen material.

PROTECTION: Precautions should be taken to avoid damage to any surface or utilities.

MATERIALS:

TYPE I – HIGH EXPANSION POLYURETHANE CHEMICAL GROUT

1. The grouting material shall be a hydrophobic polyurethane liquid of the type that is injected into joints, holes or cracks to stop flowing water, or into voids to fill open space. Material must also be suitable when used in conjunction with a carrier medium such as oil-free oakum or open cell backer rod to stop highly active leaks. Compound shall be non-toxic and non- flammable after curing. The polyurethane liquid shall react only with water to foam and expand to form a tough, polyurethane gasket that stops water.

Material must resist seawater, common acids and petroleum and be designed for use in sealing leaks in concrete structures.

2. The grouting material shall be certified by the manufacturer to contain no phthalates and no toluene diisocyanates (TDIs). In addition, the grouting material shall have no components, including catalysts, which require a hazmat designation for shipping or handling.
3. All water reactive polyurethane grouts shall be packaged in metal containers with a blanket of dry nitrogen or other moisture free inert gas. Products packaged in plastic containers or without a moisture free inert gas layer will not be approved for use on this project
4. The grout shall have an up to date approved certification by an accredited 3rd party testing agency such as UL or WQA that it complies with the Drinking Water System Components ANSI/NSF 61 standard
5. Properties of Polyurethane Chemical Grout:

Property	Standards	Results
Solids Content:	ASTM D2369	100% min
Viscosity:	ASTM D2196 at 77°F	200 CPS max
Flash Point (Pensky Martens)	ASTM D93	293 °F min
Density (cured)	ASTM D3574	1.1gm/cm^3 min
Shrinkage (cured)	ASTM D1042	<10%

TYPE II – FLEXIBLE POLYURETHANE CHEMICAL GROUT

1. The grouting material shall be a one- or two-component low viscosity hydrophilic or hydrophobic polyurethane liquid of the type that is injected into joints, holes or cracks. Material must also be suitable when used in conjunction with a carrier medium such as oil-free oakum or open cell backer rod to stop highly active leaks. Compound shall be non-toxic and non-flammable after curing. The polyurethane liquid shall react only with water to foam and expand to form a flexible, tough, polyurethane gasket that stops water. Material must resist seawater, common acids and petroleum and be designed for use in sealing leaks in concrete structures.
2. The grouting material shall be certified by the manufacturer to contain no phthalates and no toluene diisocyanates (TDIs). In addition, the grouting material shall have no components, including catalysts, which require a hazmat designation for shipping or handling.
3. All water reactive polyurethanes grouts shall be packaged in metal containers with a blanket of dry nitrogen or other moisture free inert gas. Products packaged in plastic containers or without a moisture free inert gas layer will not be approved for use on this project
4. The grout shall have an up-to-date approved certification by an accredited 3rd party testing agency such as UL or WQA that it complies with the Drinking Water System Components ANSI/NSF 61 standard
5. Properties of Polyurethane Chemical Grout:

Property	Standards	Results
Solids Content:	ASTM D2369	100% min
Viscosity:	ASTM D2196 at 77°F	300 CPS max
Elongation (cured)	ASTM D3574	125 % min.
Flash Point (Pensky Martens)	ASTM D93	293 °F min
Density (cured)	ASTM D3574	1.1 gm/cm3
Tensile Strength (cured)	ASTM D3574	>800 psi
Shrinkage (cured)	ASTM D1042	18% linear min
Expansion (cured)	ASTM	300% min

TYPE II - METHACRYLIC ACRYLATE GROUT

1. The grouting material shall be multiple component, low viscosity, methacrylic acrylate liquid grout which forms a flexible, waterproof gel when cured. The gel time shall be adjustable to meet the site conditions without negatively impacting the properties of the cured grout. All components required to catalyze and cure the chemical grout shall be supplied by the grout manufacturer. Material must resist seawater, common acids and petroleum and be designed for use in sealing leaks in concrete structures.

2. Properties of Methacrylic Acrylate Liquid Grout:

Property	Standards	Results
Viscosity:	ASTM D2196 at 77F	20 CPS max Resin
		6-8 CPS Mixed
Elongation (at break)	ASTM D638	300% min
Flash Point (Pensky Martens)	ASTM D93	215 °F min
Post Reaction Expansion		> 50%

TYPE III - METHACRYLIC ACRYLATE GROUT

1. The grouting material shall be multiple component, low viscosity, methacrylic acrylate liquid grout which forms a flexible, waterproof gel when cured. The gel time shall be adjustable to meet the site conditions without negatively impacting the properties of the cured grout. All components required to catalyze and cure the chemical grout shall be supplied by the grout manufacturer. Material must resist seawater, common acids and petroleum and be designed for use in sealing leaks in concrete structures.

2. Properties of Methacrylic Acrylate Liquid Grout:

Property	Standards	Results
Viscosity Resin	ASTM D2196 at 77F	20 CPS max
Mixed		6-8 CPS
Elongation (at break)	ASTM D638	300% min
Flash Point (Pensky Martens)	ASTM D93	215 °F min
Post Reaction Expansion		> 50%

ACCESSORIES: Packers for automated application shall be supplied from the manufacturer of the grout or equivalent in type, size and material. Equivalent packer must be acceptable to grout manufacturer and Engineer.
Moisture impermeable hoses are required for use where hydro-active grout material is being pumped.
Expansion Joint Backer Rod: The expansion joint backer rod shall be cross linked open cell polyurethane foam with a rectangular or circular cross section. The cross section of the cross linked open cell polyurethane foam shall be a minimum 150% of the width of the joint as measured between the cleaned concrete surfaces.
Surface sealant: The Surface sealant for the expansion joints shall be a silicone joint compound. The Sealant shall be gray in color.
Other materials, as required by the grout manufacturer as needed.

PUMPS AND MISCELLANEOUS EQUIPMENT: Use only pumps and mixers approved by grout manufacturer.
Hammer drills and masonry bits or core drills as required to install packers for grouting in accordance with manufacturer's recommendations.

CONSTRUCTION METHODS:
Preparation:

Before beginning any grouting operations, the Contractor shall test the groundwater for pH levels. If pH levels are found to be below 4 or above 10, contact the technical service department of the manufacturer before proceeding.

The concrete cracks, holes, joints, and fractures shall be clean and sound. Remove dust, laitance, grease, curing compounds, waxes impregnations, foreign particles, coatings, efflorescence, rust, stains, and deleterious materials by wire brushing, scraping or by mechanical methods.

If the crack or joint to be injected is ½ inch wide or greater at surface, use oil free oakum saturated with grout and mix with water. Hold oakum for 1 to 2 minutes to allow foaming and insert oakum into the crack, hole or joint. Water shall be sprayed into area before inserting activated oakum.

Type I – High Expansion Polyurethane

Drill offset injection holes to intersect the crack, joint or void.

For cracks and joints, alternate the injection holes on either side of the crack or joint. For voids, holes may be drilled directly into the void.

In the case of high-pressure water leaks, additional holes may be drilled to provide for pressure release during grouting.

Install the injection packers in holes and tighten.

Type II - Acrylic Methacrylic Acrylate or Polyurethane

Drill offset injection holes at a distance from the crack or joint half the depth of the concrete, or maximum 10 inches deep.

Drill at a 45-degree angle (or other angle if required) to intersect the crack or joint at just over half the depth of the concrete.

Flush holes with water prior to installing packers.

Alternate the injection holes on either side of the crack or joint.

Space holes so the grout can completely fill the crack or joint. Injection hole spacing is normally 6 inches to 24 inches apart depending upon the width of the defect. Generally, the wider the defect, the greater the distance of grout travel; therefore, the injection holes will be father apart. Use test holes to pump water into the cracks or joint to determine spacing for injection holes.

Install the injection packers in holes and tighten.

All locations to be grouted shall be thoroughly flushed with clean water pumped through the packers to remove dirt, dust, and other contaminants.

Type III – Methacrylic Acrylate

Lay out the limits of the grout curtain that is to be created.

Drill a pattern of holes through the structure to the soils outside the structure.
The pattern shall be 12 inches on center horizontally and 12 inches on center vertically.

Offset each row of drill holes to split the difference of each of the previous rows to create a diamond drilling pattern. That is, if row #1 has holes at 0 inches 12 inches & 24 inches; row #2 shall have holes at 6 inches, 18 inches & 30 inches. The third row shall then return to the first row pattern.

Continue with as many rows as required to create the desired size grout curtain.

Test for conductivity by installing random packers and injecting water. Note how much water must be injected before seeing flow at adjacent holes. Drill additional holes in between primary if no return is observed during conductivity testing.

Install the injection packers in holes and tighten. Flush all packers with clean water prior to injection.

Application:

General

Follow manufacturer's guidelines for temperature restrictions during installation of grout products.

The injection equipment shall meter the chemical grout and dispense the product into the prepared crack, hole, joint or area of defective waterproofing. The unit shall be portable and be approved by grout manufacturer. The pump shall provide control of the chemical grout at the nozzle. The pumps shall be air powered or electric, shall provide an in-line pressure metering system, and shall contain drain-back plugs, if required.

Follow manufacturer's recommendations for the use of safety equipment required.

Installation Procedure: Type I - High Expansion Polyurethane Grout

Follow steps listed in preparation section above.

If required to temporarily stop flowing water, install unoiled oakum or hydraulic cement to the crack or defect to slow the water flow.

Mix resin per manufacturer's published instructions. Use sufficient catalyst to provide the required reaction time. Take a sample of catalyzed resin from the pump and react it in a cup. Observe the reaction time and general condition of the reacted foam. Repeat this process with each new batch of mixed resin.

Pump chemical grout at 0 psi and slowly raising pressure until grout flow is achieved for 45 seconds and then pause to allow the material to flow into all the cracks and crevices. Visually inspect for material flow and water movement to appear on the surface. When grout reaches next packer and water movement stops, begin injection into the next packer. When sealing vertical cracks, begin injecting at the bottom of the crack and work up. If faster reaction time is needed, or if grout is being pumped at the cold temperature and additional accelerator may be added to base material. Consult manufacturer before adding an accelerator. Re-inject to assure that all voids are properly sealed off.

Installation Procedure: Type II - Polyurethane and Methacrylic Acrylate Grouts

Follow steps listed in preparation section above.

Mix resin in accordance with manufacturer's published literature and field recommendations.

For each mixed batch of resin the contractor shall perform a cup test by reacting 1 to 2 ounces of resin in a clean container to determine the reaction time based on current field temperatures and conditions.

Inject resin through the installed packers. The order of injection and duration of injection shall be outlined in the contractor's grouting plan. Deviations in the order or duration may be required due to unforeseen field conditions; however, must be brought to the attention of the field engineer.

Pump chemical grout beginning at 0 psi and slowly raising pressure until grout flow is achieved for 45 seconds and then pause to allow the material to flow into all the cracks and crevices. Visually inspect for material flow and water movement to appear on the surface. When grout reaches next packer and water movement stops, begin injection into the next packer.

Return to the original injection packer and repeat step #5 for a second pass.

Complete as many passes as required to reach resin rejection at each packer.

FOR POLTURETHANE INJECTION ONLY: Inject a small amount of water into each packer to insure resin reaction throughout the drill hole.

Installation Procedure:

Type III – Methacrylic Acrylate Grout

Follow steps listed in preparation section above.

Mix resin in accordance with manufacturer's published literature and field recommendations.

For each mixed batch of resin the contractor shall perform a cup test by reacting 1 to 2 ounces of resin in a clean container to determine the reaction time based on current field temperatures and conditions.

Inject resin through the installed packers. The order of injection and volume of injection shall be outlined in the contractor's grouting plan. Deviations in the order or volume may be required due to unforeseen field conditions; however, must be brought to the attention of the field engineer.

When beginning the injection process, the packers in the holes adjacent should be temporarily removed to allow for the observation of resin flow between packers. The volume of grout injected per packer may be adjusted based on these observations; with the approval of the engineer.

Care should be taken to ensure that sufficient resin is injected in each packer to create a continuous curtain of reacted resin in the soil along the structure.

Inspect repaired areas after grout has cured. If leaking continues, repeat above steps as required to stop the leak. The repair is accepted when the groundwater infiltration rate meets 0.01 gallons per day in locations where leak is not visible to the public and 0.001 gallons per day in locations where leak is visible to the public.

Inspect repaired areas again after 3 months and repeat step in 3.2 E above as necessary.

Remove packer and restore injection locations to match surrounding surface in areas which can be viewed by the public. For all other areas there is no need to remove the packers. However excess grout and debris must be removed.

Adhere to all manufacturer's notes appearing in product literature, and the following precautions:

Drawings of the areas to be repaired shall be reviewed before start.

Minimum substrate temperature shall be 40 degrees F unless otherwise stated in manufacturer's literature.

All equipment in contact with grout shall be dry. (Separate pumps required for grout and water).

Cleaning:

Provide suitable canvas or plastic traps to protect adjacent areas during injection.

Clean overflow from adjacent surfaces using materials and methods recommended by manufacturer. Leave finished work and work in area neat, clean condition without evidence of spillovers.

METHOD OF MEASUREMENT: Item Code 836.9901 Repairs to Structure Concrete Masonry – Leaking Crack Repairs C2 will be measured by the linear feet of cracks repaired on the plans as C2.

Item Code 836.9902 Repairs to Structure Concrete Masonry – Leaking Crack Repairs C3 will be measured by the linear feet of cracks repaired on the plans as C3.

Item Code 836.9903 Repairs to Structure Concrete Masonry – Leaking Crack Repairs C4 will be measured by the linear feet of cracks repaired on the plans as C4.

BASIS OF PAYMENT: Payment for Item Code 836.9901 Repairs to Structure Concrete Masonry – Leaking Crack Repairs C2 will be made at the Contract unit price for the quantities specified herein. No additional payment shall be made for follow-up three-month inspection of repaired leaks and any further crack sealing required based on the follow-up inspection.

Payment for Item Code 836.9902 Repairs to Structure Concrete Masonry – Leaking Crack Repairs C3 will be made at the Contract unit price for the quantities specified herein. No additional payment shall be made for follow-up three-month inspection of repaired leaks and any further crack sealing required based on the follow-up inspection.

Payment for Item Code 836.9903 Repairs to Structure Concrete Masonry – Leaking Crack Repairs C4 will be made at the Contract unit price for the quantities specified herein. No additional payment shall be made for follow-up three-month inspection of repaired leaks and any further crack sealing required based on the follow-up inspection.

CODE 842.9901
PAINTING

842.9901.01 DESCRIPTION. This item of work consists of furnishing and installing a paint coating system on tunnel walls and electrical room walls and ceiling, shelter's iron columns, guard railing fence over the brick and granite wall at the portals, and clear coating finish on the bus shelter wood ceiling as directed by the Engineer, all in accordance with these Specifications. The term paint in this specification shall include color or clear coating

842.9901.02 MATERIALS. Paint materials shall conform to the following requirements.

a. **Material Compatibility:** Provide block fillers, primers, and finish-coat materials that are compatible with one another and with the substrates indicated under conditions of service and application, as demonstrated by manufacturer based on testing and field experience**.**

b. **Material Quality:** Provide manufacturer's best-quality paint material of the various coating types specified that are factory formulated and recommended by manufacturer for application indicated. Paint-material containers not displaying manufacturer's product identification will not be acceptable. Proprietary Names: Use of manufacturer's proprietary product names to designate colors or materials is not intended to imply that products named are required to be used to the exclusion of equivalent products of other manufacturers. Furnish manufacturer's material data and certificates of performance for proposed substitutions.

842.9901.03 CONSTRUCTION METHODS.

Examine substrates, areas, and conditions, with Applicator present, for compliance with requirements for paint application.

1. Proceed with paint application only after unsatisfactory conditions have been corrected and surfaces receiving paint are thoroughly dry.
2. Start of painting will be construed as Applicator's acceptance of surfaces and conditions within a particular area.
3. Coordination of Work: Review other Sections in which primers are provided to ensure compatibility of the total system for various substrates. On request, furnish information on characteristics of finish materials to ensure use of compatible primers.

Preparation - General: Remove hardware and hardware accessories, plates, machined surfaces, lighting fixtures, and similar items already installed that are not to be painted. If removal is impractical or impossible because of size or weight of the item, provide surface-applied protection before surface preparation and painting.

1. After completing painting operations in each space or area, reinstall items removed using workers skilled in the trades involved.

Cleaning: Before applying paint or other surface treatments, clean substrates of substances that could impair bond of the various coatings. Remove oil and grease before cleaning.

2. Schedule cleaning and painting so dust and other contaminants from the cleaning process will not fall on wet, newly painted surfaces.

Surface Preparation: Clean and prepare surfaces to be painted according to manufacturer's written instructions for each particular substrate condition and as specified. Send wood ceilings to remove old finish prior to application of new finish.

3. Provide barrier coats or tie-coats over incompatible primers or remove and reprime.
4. Cementitious Materials: Prepare concrete, concrete unit masonry, cement plaster, and mineral-fiber-reinforced cement panel surfaces to be painted. Remove efflorescence, chalk, dust, dirt, grease, oils, and release agents. Roughen as required to remove glaze. If hardeners or sealers have been used to improve curing, use mechanical methods of surface preparation to remove.
5. Use abrasive blast-cleaning methods if recommended by paint manufacturer.
6. Determine pH of surfaces using pH indicating papers and distilled water and perform moisture vapor transmission testing for concrete floors in accordance with ASTM F 1869 and moisture tests on concrete walls in accordance with ASTM D 4263, Standard Test Method for Indicating Moisture in Concrete by the Plastic Sheet Method. For masonry walls and wood surface, use a moisture meter approved by the coating manufacturer. Follow the selected and approved coating manufacturers recommendations for acceptable pH values, moisture vapor transmission values (in lbs. of moisture per 24 hours per 1,000 SF), and moisture meter values (for masonry). If these values are not acceptable, do not paint surfaces until moisture levels are acceptable or additional surface preparation has been performed and the pH values measured are acceptable
7. Clean concrete floors to be painted with shot blast equipment.

Material Preparation: Mix and prepare paint materials according to manufacturer's written instructions.

8. Maintain containers used in mixing and applying paint in a clean condition, free of foreign materials and residue.

9. Blend material before application to produce a mixture of uniform density. Blend as required during application. Do not stir surface film into material. If necessary, remove surface film and strain material before using.

10. Use only thinners approved by paint manufacturer and only within recommended limits.

Tinting: Tint each undercoat a lighter shade to simplify identification of each coat when multiple coats of same material are applied. Tint undercoats to match the color of the finish coat, but provide sufficient differences in shade of undercoats to distinguish each separate coat.

APPLICATION

General: Apply paint according to manufacturer's written instructions. Use applicators and techniques best suited for substrate and type of material being applied.

11. Paint colors, surface treatments, and finishes are indicated in the paint schedules.

12. Do not paint over dirt, rust, scale, grease, moisture, scuffed surfaces, or conditions detrimental to formation of a durable paint film.

13. Provide finish coats that are compatible with primers used.

14. The term "exposed surfaces" includes areas visible when permanent or built-in fixtures, grilles, convector covers, covers for finned-tube radiation, and similar components are in place. Extend coatings in these areas, as required, to maintain system integrity and provide desired protection.

15. Paint surfaces behind movable equipment and furniture the same as similar exposed surfaces. Before final installation of equipment, paint surfaces behind permanently fixed equipment or furniture with prime coat only.

16. Paint interior surfaces of ducts with a flat, nonspecular black paint where visible through registers or grilles.

17. Paint back sides of access panels and removable or hinged covers to match exposed surfaces.

18. Sand lightly between each succeeding enamel or varnish coat.

Scheduling Painting: Apply first coat to surfaces that have been cleaned, pretreated, or otherwise prepared for painting as soon as practicable after preparation and before subsequent surface deterioration.

19. The number of coats and film thickness required are the same regardless of application method. Do not apply succeeding coats until previous coat has cured as recommended by manufacturer. If sanding is required to produce a smooth, even surface according to manufacturer's written instructions, sand between applications.

20. Omit primer over wood scheduled for clear finish and metal surfaces that have been shop primed and touchup painted.

21. If undercoats, stains, or other conditions show through final coat of paint, apply additional coats until paint film is of uniform finish, color, and appearance. Give special attention to ensure that edges, corners, crevices, welds, and exposed fasteners receive a dry film thickness equivalent to that of flat surfaces.

22. Allow sufficient time between successive coats to permit proper drying. Do not recoat surfaces until paint has dried to where it feels firm, and does not deform or feel sticky under moderate thumb pressure, and until application of another coat of paint does not cause undercoat to lift or lose adhesion.

Application Procedures: Apply paints and coatings by brush, roller, spray, or other applicators according to manufacturer's written instructions.

23. Brushes: Use brushes best suited for type of material applied. Use brush of appropriate size for surface or item being painted.

24. Rollers: Use rollers of carpet, velvet-back, or high-pile sheep's wool as recommended by manufacturer for material and texture required.

25. Spray Equipment: Use airless or conventional spray equipment with orifice size as recommended by manufacturer for material and texture required.

Minimum Coating Thickness: Apply paint materials no thinner than manufacturer's recommended spreading rate to achieve dry film thickness indicated. Provide total dry film thickness of the entire system as recommended by manufacturer.

Block Fillers: Apply block fillers to concrete masonry block at a rate to ensure complete coverage with pores filled.

Prime Coats: Before applying finish coats, apply a prime coat, as recommended by manufacturer, to material that is required to be painted or finished and that has not been prime coated by others. Recoat primed and sealed surfaces where evidence of suction spots or unsealed areas in first coat appears, to ensure a finish coat with no burn-through or other defects due to insufficient sealing.

Pigmented (Opaque) Finishes: Completely cover surfaces as necessary to provide a smooth, opaque surface of uniform finish, color, appearance, and coverage. Cloudiness, spotting, holidays, laps, brush marks, runs, sags, ropiness, or other surface imperfections will not be acceptable.

Transparent (Clear) Finishes: Use multiple coats to produce a glass-smooth surface film of even luster. Provide a finish free of laps, runs, cloudiness, color irregularity, brush marks, orange peel, nail holes, or other surface imperfections.

26. Provide satin finish for final coats.

Completed Work: Match approved samples for color, texture, and coverage. Remove, refinish, or repaint work not complying with requirements.

CLEANING

Cleanup: At the end of each workday, remove empty cans, rags, rubbish, and other discarded paint materials from Project site.

27. After completing painting, clean glass and paint-spattered surfaces. Remove spattered paint by washing and scraping without scratching or damaging adjacent finished surfaces.

PROTECTION

Protect work of other trades, whether being painted or not, against damage from painting. Correct damage by cleaning, repairing or replacing, and repainting, as approved by Engineer.

Provide "Wet Paint" signs to protect newly painted finishes. After completing painting operations, remove temporary protective wrappings provided by others to protect their work.

28. After work of other trades is complete, touch up and restore damaged or defaced painted surfaces. Comply with procedures specified in Painting and Decorating Contractors of America PDCA P1.

PAINT SCHEDULE

Schedule: Provide products and number of coats specified. Use of manufacturer's proprietary product names to designate colors, materials, generic class, standard of quality and performance criteria and is not intended to imply that products named are required to be used to the exclusion of equivalent performing products of other manufacturers.

1. Exterior Masonry and Concrete to be Painted (to be used for the tunnel walls and electrical room walls and ceiling):

   Tnemec Series 156 Enviro-Crete at 4.0 to 8 mils DFT Or Approved Equal

2. Electrical room floor to be Painted :

   Primer: ArmorSeal 8100WB and Top Coat: ArmorSeal 8100WB at 1 coat Epoxy Primer – DFT 1.0 – 2.0 mils per coat; 1 coat Top Coat DFT 10.0 – 30.0 mils per coa. or Approved Equal

3. Cast Iron Columns at Bus Shelter and iron guard railing fence to be Painted: Refer to The Secretary of Interior's Standards For the Treatment of Historic Properties for painting recommendations.

   Primer: Tnemec 66 Hi Build Epoxoline; minimum 2.0 mils, maximum 6.0 mils per coat

   Paint Color: Contractor to perform analysis of historic paint color in order to match existing.

   Finish Coat: Tnemec 1072 Fluoronar or Approved Equal

4. Wood Ceiling at Bus Shelter: Varnish, Exterior, Aliphatic Polyurethane, Two Component: Solvent-based, two-component, aliphatic polyurethane clear coating used on exterior wood surfaces

   Gloss Level: Gloss of minimum 60 units at 60 degrees when tested in accordance with ASTM D523

5. Guard Rail Fence Over East Boat Wall: All Surface Enamel Oil Primer, All Surface Enamel Oil Base, Purdy Clearcut Elite Glide, Tricorn Black SW 6258

842.9901.04 METHOD OF MEASUREMENT. "Painting" will be measured by the square foot actually installed in accordance with the Plans and/or as directed by the Engineer.

842.9901.05 BASIS OF PAYMENT. The accepted quantities of "Painting" will be paid for at the respective contract unit prices per square foot as listed in the Proposal. The prices so-stated constitute full and complete compensation for all labor, materials, and equipment and for all incidentals required to finish the work, complete and accepted by the Engineer.

CODE M05.04.9
METAL CASTINGS

M05.04.9.01 DESCRIPTION. This work consists of the reconstruction of iron metal casting of the capital (top header) section of the ornamental, Corinthian column at the bus shelter located near the west portal entrance of the East Side Tunnel. The reconstructed capital shall be identical to the remaining capitals and shall be mechanically attached to the column.

M05.04.9.02 REFERENCES. Codes and standards referred to in this Section are:

a. ASTM A 47 Specification for Ferric Malleable Iron Castings
b. ASTM A 48 Specification for Gray Cast Iron Castings
c. ASTM A 536 Specification for Ductile Iron Castings
d. ASTM B 584 Manganese Bronze

M05.04.9.03 SUBMITTALS. Product Data: Submit manufacturer's technical data for each product indicated including recommendations for their application and use. Include test reports, mockups and prototypes substantiating that products comply with requirements.

M05.04.9.04 QUALITY ASSURANCE.

M05.04.9.05 Mockups and Samples. Prepare sketches, 3D mockups and prototypes at the required scale for demonstration and approval of mold casting methods, aesthetics, materials, and coatings for execution of casting. Make allowance in the patterns so that the specified thickness is not reduced.

M05.04.9.06 Preinstallation Meetings. Conduct conference at East Side Tunnel, bus shelter at the West Portal entrance, Providence, Rhode Island.

M05.04.9.07 Testing. Perform appropriate testing of castings to check for defects or that any defects are within agreed dimensional and shrinkage tolerances. Ensure that prototype follows the design intent, size, surface finishing, soundness and expected loads.

M05.04.9.08 MATERIALS.

a. Cast Iron: Either gray iron, ASTM A48/A48M, or malleable iron, ASTM A47/A47M unless otherwise indicated.

b. Fasteners for Anchoring to Other Construction: Unless otherwise indicated, select fasteners of type, grade, and class required to produce connections suitable for anchoring indicated items to other types of construction indicated

M05.04.9.09 Final Casting and Cleaning.

a. Remove supports gates and risers and any imperfections or remnants from final casting.

1. Cleaning: Gentle cleaning methods and systems shall be used so to not damage the cast.

2. Final Finishing: Apply paint as specified in Code 842.9901

M05.04.9.10 DELIVERY, STORAGE AND HANDLING.

a. Deliver materials to site in manufacturer's original and unopened containers and packaging, bearing labels as to type and names of products and materials.

b. Protect column parts and materials during storage and construction from wetting by rain, snow or ground water, and from staining or intermixture with materials. Comply with manufacturer's recommendations for minimum and maximum temperature requirements for storage.

M05.04.9.11 EXECUTION.

a. Installation: Erect all castings to accurate grades and alignment, carefully support castings to prevent movement.

b. Painting: Clean metal castings thoroughly before painting. Paint all castings as specified in Code 842.9901.

M05.04.9.12 METHOD OF MEASUREMENT. "Metal Castings" of columns will be measured by each column capital complete in place in accordance with the Contract Documents and/or as directed by the Engineer. All items are measured complete in place, including all preparation, accessories, and incidentals.

M05.04.9.13 BASIS OF PAYMENT. The accepted quantities of "Metal Castings" will be paid for at the respective contract unit prices by each column capital complete in place. The price so stated shall constitute full and complete compensation for all labor, materials, equipment, and all incidentals required to finish the work, complete in place and accepted by the Engineer.

CODE M05.04.10
COPPER ROOF CEILING AND ORNAMENTS

M05.04.10.01 DESCRIPTION. This work consists of repairs to the existing copper roof panels for the bus shelter, and the removal and replacement of the sheet metal trim, flashing, cladding over beams, console, soffit and concealed wood blocking required to support sheet metal located near the west portal entrance of the East Side Tunnel. Panel material shall match existing roof panel.

M05.04.10.02 SUBMITTALS. Product Data: For batten-seam metal roof panels. Include construction details, material descriptions of individual components and profiles, and finishes for each type of panel necessary.

a. Shop Drawings: Include fabrication and installation layout of metal panels; details of edge conditions, joints, panel profiles, corners, anchorages, attachment system, trim, flashings, closures, and accessories; and special details.

1. Include plans, elevations, sections, and attachment details.

2. Detail fabrication and installation layouts, expansion joint locations, and keyed details. Distinguish between shop and field assembled work.
3. Include identification of material, thickness, weight, and finish for each item and location in Project.

4. Include details for forming, including profiles, shapes, seams, and dimensions.

5. Include details for joining, supporting, and securing, including layout and spacing of fasteners, cleats, clips, and other attachments. Include pattern of seams.

6. Include details of termination point and assemblies.

7. Include details of expansion joints and expansion joint covers, including showing direction of expansion and contraction from fixed points.

8.Include details of roof penetration flashing.

9.Include details of edge conditions, including eaves, ridges, valleys, rakes, crickets, flashings, and counterflashings.

10. Include details of special conditions.

11. Include details of connections to adjoining work.

12 Include details of copper gutter, rain leader, copper soffit, copper trim/cladding, console, and vise

b. Accessories: Include details of the flashing, trim, and anchorage systems, at a scale of not less than 1-1/2” inches per 12 inches.

c. Samples for Initial Selection: for each type of metal panel indicated with factory applied color finishes. Include similar Samples of trim and accessories involving color selection.

d. Samples for Verification: For each type of exposed finish required, prepared on Samples of size indicated below.

1. Metal Panels: 12 inches long by actual panel width. Include clips, fasteners, closures, and other metal panel accessories.

2. Sheet Metal Flashing: 12 inches long by actual width of unit, including finished seam and in required profile. Include fasteners, cleats, clips, closures, and other attachments.

3. Trim, Metal Closures, Expansion Jointsm Joint Intersections, and Miscellaneous Fabrications: 12 inches long and in required profile. Include fasteners and other exposed accessories.

4. Unit-Type Accessories and Miscellaneous Materials: Full size Sample.

e. Informational Submittals:

1. Qualification Data: For Installer

2. Product Test Reports

3. Field quality contrail reports

4. Sample Warranties: For special warranties

5. Maintenance Data: For metal panels to include in maintenance manuals

f. Product Data: For each of the following:

1. Underlayment materials

2. Elastomeric sealant

3. Butyl sealant

4. Epoxy seam sealer

5. Wood Blocking and supports

6. Anchors and Fasteners

7. Soldering compound

g. Qualification Data: For fabricator.

h. Product Certificates: For each type of coping and roof edge flashing that is ANSI/SPRI/FM 4435/ES-1 tested and FM Approvals approved.

i. Product Test Reports: For each product, for test performed by a qualified testing agency.

j. Evaluation Reports: For coping and roof edge flashing, from an agency acceptable to authority having jurisdiction.

k. Sample Warranty: For special warranty.

l. Maintenance Data: For sheet metal flashing and trim, and its accessories, to include in maintenance manuals.

m. Special warranty.

M05.04.10.03 QUALITY ASSURANCE.

a. Installer Qualifications: An entity that employs installers and supervisors who are trained and approved by manufacturer.

b. UL Certified, Portable Roll-Forming Equipment: UL certified, portable roll-forming equipment capable of producing metal panels warranted by manufacturer to be the same as factory-formed products. Maintain UL certification of portable roll-forming equipment for duration of work.

M05.04.10.04 FIELD CONDITIONS.

a. Fabricator Qualifications: Employs skilled workers who custom fabricate sheet metal flashing and trim similar to that required for this Project and whose products have a record of successful in service performance.

1. For copings and roof edge flashings that are ANSI/SPRI/FM 4435/ES-1 tested, shop is to be listed as able to fabricate required details as tested and approved.

b. Mockups: Build mockups to verify selections made under Sample submittals, to demonstrate aesthetic effects, and to set quality standards for fabrication and installation.

1. Build mockup of typical roof edge, including gutter, fascia, fascia trim, approximately 10 feet long, including supporting construction cleats, seams, attachments, underlayment, land accessories.

2. Approval of mockups does not constitute approval of deviations from the Contract Documents contained in mockups unless Owner specifically approves such deviations in writing.

M05.04.10.05 PREINSTALLATION MEETINGS. Conduct conference at East Side Tunnel, bus shelter at the West Portal entrance, Providence, Rhode Island.

1. Review construction schedule. Verify availability of materials, Installer's personnel, equipment, and facilities needed to make progress and avoid delays.

2. Review special roof details, roof drainage, roof penetration flashing, equipment curbs, and condition of other construction that affect sheet metal flashing and trim.

3. Review requirements for insurance and certificates and applicable.

4. Review sheet metal flashing observation and repair procedures after flashing installation.

M05.04.10.06 DELIVERY, STORAGE AND HANDLING.

a. Deliver components, metal panels, and other manufactured items so as not to be damaged or deformed. Package metal panels for protection during transportation and handling.

b. Unload, store, and erect metal panels in a manner to prevent bending, warping, twisting, and surface damage.

c. Stack metal panels horizontally on platforms or pallets, covered with suitable weathertight and ventilated covering. Store metal panels to ensure dryness, with positive slope for drainage of water. Do not store metal panels in contact with other materials that might cause staining, denting, or other surface damage.

d. Retain strippable protective covering on metal panels during installation.

e. Copper Panels: Wear gloves when handling to prevent fingerprints and soiling of surface.

f. Sheet Metal: Do not store sheet metal flashing and trim materials in contact with other materials that may cause staining, denting, or other surface damage.

1. Store sheet metal flashing and trim materials away from uncured concrete and masonry.

2. Protect stored sheet metal flashing and trim contact with water.

g. Protect strippable protective covering on sheet metal flashing and trim from exposure to sunlight and high humidity, except to extent necessary for period of sheet metal flashing and trim installation.

M05.04.10.07 FIELD CONDITIONS.

a. Weather Limitations: Proceed with installation only when existing and forecasted weather conditions permit assembly of metal panels to be performed according to manufacturer's written instructions and warranty requirements.

M05.04.10.08 COORDINATION.

a. Coordinate sizes and locations of roof curbs, equipment supports, and roof penetrations with actual equipment provided.

b. Coordinate metal panel installation with rain drainage work, flashing, trim, construction of soffits, and other adjoining work to provide a leakproof, secure, and noncorrosive installations.

M05.04.10.09 WARRANTY.

a. Special Warranty: Manufacturer's standard form in which manufacturer agrees to repair or replace components of metal panel systems that fail in materials or workmanship within specified warranty period.

1. Failures include, but are not limited to the following:

    a. Structural failures including rupturing, cracking, or puncturing.

    b. Deterioration of metals and other materials beyond normal weathering.

2. Warranty Period: (Two) 2 years from date of Substantial Completion

b. Special Warranty on Panel Finishes: Manufacturer’s standard form in which manufacturer agrees to repair finish or replace metal panels that show evidence of deterioration of factory applied finishes within specified warranty period.

1. Exposed Panel Finish: Deterioration includes, but is not limited to the following:

    c. Cracking, checking, peeling, or failure of coating to adhere to bare metal.

2. Finish Warranty Period: 10 years from date of Substantial Completion.

M05.04.10.11 PERFORMANCE REQUIREMENTS

a. Structural Performance: Provide metal panel systems capable of withstanding the effects of the following loads, based on testing accordance to ASTM E1592:

1. Wind Loads: As indicated in RI Building code for the project location and exposure.

2. Other Design Loads: As indicated on Drawings.

3. For wind loads, no greater than 1/180

b. Water Penetration under Static Pressure: No water penetration when tested according to ASTM E1646 at the following test pressure difference.

1. Test-Pressure Difference: 2.86 lbf/sq. ft.

c. Hydrostatic-Head Resistance: No water penetration when tested according to ASTM E2140.

d. Wind-Uplift Resistance: Provide metal roof panel assemblies that comply with UL 580 for wind uplift-resistance class indicated.

1. Uplift Rating: UL 30 .

e. Thermal Movements: Allow for thermal movements from ambient and surface temperature changes by preventing buckling, opening of joints, overstressing of components, failure of joint sealants, failure of connections, and other detrimental effects. Base calculations on surface temperatures of materials due to both solar heat gain and nighttime-sky heat loss.

1. Temperature Change (Range): 180 deg F (100 deg C), material surfaces.

f. Sheet metal flashing and trim assemblies, including cleats, anchors, and fasteners, are to withstand wind loads, structural movement, thermally induced movement and exposure to weather without failure due to defective manufacture, fabrication, installation, or other defects in construction. Completed sheet metal flashing and trim are not to rattle, leak, or loosen, and are to remain watertight.

g. Sheet Metal Standard for Flashing and Trim: Comply with NRCA's "The NRCA Roofing Manual: Architectural Metal Flashing, Condensation and Air Leakage Control, and Reroofing" and SMACNA'S "Architectural Sheet Metal Manual" requirements for dimensions and profiles shown unless more stringent requirements are indicated.

h. Sheet metal Standard for Copper: Comply with CDA's "Copper in Architecture Handbook". Conform to dimensions and profiles shown unless more stringent requirements are indicated.

M05.04.10.12 BATTEN SEAM METAL ROOF PANELS.

a. Provide metal roof panel repair designed to be installed by covering the edge of adjacent panel with formed splice as indicated on Drawings mechanically attaching panels to supports using concealed clips. Include accessories required for weathertight installation.

1. Copper Sheet: ASTM B370, lead coated or uncoated (to match existing) cold rolled copper sheet, H00 temper.

a. Thickness: 16 oz/q.ft.

b. Exposed Finish: match existing

2. Panel Coverage: As needed for the repair.

M05.04.10.13 UNDERLAYMENT MATERIALS.

a. Felt Underlayment: ASTM D226/D226M, Type II (No. 30), asphalt-saturated organic felts.

M05.04.10.14 MISCELLANEOUS MATERIALS.

b. Panel Accessories: Provide components required for a complete, weathertight panel system including trim, copings, fasciae, corner units, clips, flashings, sealants, gaskets, fillers, closure strips, and similar items. Match material and finish of metal panels unless otherwise indicated.

1. Closures: Provide closures at eaves fabricated of same metal as metal panels.

2. Backing Plates: Provide metal backing plates at panel end splices, fabricated from material recommended by manufacturer.

c. Flashing and Trim: Provide flashing and trim formed from same material as metal panels as required to seal against weather and to provide finished appearance. Locations include, but are not limited to, eaves, rakes, corners, bases, framed openings, ridges, fasciae, and fillers. Finish flashing and trim with same finish system as adjacent metal panels.

d. Gutters: K Style copper gutter in 6” profile as indicated on Drawings, 16 oz copper, complete with end pieces and special pieces as required. Fabricate in minimum 96-inch- (2400-mm-) long sections, of size and metal thickness according to SMACNA’s “Architectural Sheet Metal Manual.” Furnish gutter supports spaced a maximum of 36 inches (914 mm) o.c. and as located on the existing roof, fabricated from same metal as gutters. gutters to match metal roof panels.

e. Downspouts: Formed from same material as roof panels. Fabricate in 10-foot- (3-m-) long sections, complete with formed elbows and offsets, of size and metal thickness according to SMACNA's "Architectural Sheet Metal Manual." Finish downspouts to match gutters.

d. Panel Fasteners: Self-tapping screws designed to withstand design loads. Provide concealed fasteners.

e. Plywood Sheathing: provide exterior grade sheathing under the repair area, thickness to be determined in the field, top of sheathing to align with the existing roof plank sheathing.

f. Cladding: Provide flashing and trim formed from same material as metal panels as required to seal against weather and to provide finished appearance. Locations include areas over beams.

g. Consoles and Soffits: Provide flashing and trim formed from same material as metal panels as required to seal against weather and to provide finished appearance, 16 oz copper. Areas include under the bus shelter in between columns.

M05.04.10.15 SHEET METALS.

a. Protect mechanical and other finishes on exposed surfaces from damage by applying strippable, temporary protective film before shipping.

b. Copper Sheet: ASTM B370, cold rolled copper sheet, H00 or H01 temper.

1. Manufacturers:

    a. Thomasnet

    b. K & M Sheet Metal

    c. SPS Metals

    d. Or approved equal

c. Non patinated, Exposed Finish: Mill.

d. Zinc Tim Alloy Coated Copper Sheet: ASTM B370, cold rolled copper sheet, H00 temper, coated on both sides with zinc tin alloy (50 percent zinc, 50 percent tin).

M05.04.10.15 FABRICATION.

a. Fabricate and finish metal panels and accessories at the factory, by manufacturer's standard procedures and processes, as necessary to fulfill indicated performance requirements

demonstrated by laboratory testing. Comply with indicated profiles and with dimensional and structural requirements.

b. Provide flat panel in full width and length as required for the repair

c. Fabricate metal panel joints for field soldering joint that provide a weathertight seal and that minimize movements.

d. Sheet Metal Flashing and Trim: Fabricate flashing and trim to comply with manufacturer's recommendations and recommendations in SMACNA's "Architectural Sheet Metal Manual" that apply to design, dimensions, metal, and other characteristics of item indicated.

1. Form exposed sheet metal accessories that are without excessive oil canning, buckling, and tool marks and that are true to line and levels indicated, with exposed edges folded back to form hems.

2. Seams: Fabricate nonmoving seams in accessories with flat-lock seams. Tin edges to be seamed, form seams, and solder.

3. Conceal fasteners and expansion provisions where possible. Exposed fasteners are not allowed on faces of accessories exposed to view.

4. Fabricate cleats and attachment devices from same material as accessory being anchored or from compatible, noncorrosive metal recommended in writing by metal panel manufacturer.

a. Size: As recommended by SMACNA's "Architectural Sheet Metal Manual" or metal roof panel manufacturer for application, but not less than thickness of metal being secured.

M05.04.10.15 FINISHES.

a. Protect mechanical and painted finishes on exposed surfaces from damage by applying a strippable, temporary protective covering before shipping.

b. Appearance of Finished Work: Variations in appearance of abutting or adjacent pieces are acceptable if they are within one-half of the range of approved Samples. Noticeable variations in same piece are unacceptable. Variations in appearance of other components are acceptable if they are within the range of approved Samples and are assembled or installed to minimize contrast.

c. Copper Panels and Accessories:

1. Prepatination: If needed to match existing panel, provide factory prepatinate according to ASTM B882 to convert the copper surface to an inorganic crystalline structure with the appearance and durability of naturally formed patina.

M05.04.10.16 EXAMINATION.

a. Examine substrates, areas, and conditions, with Installer present, for compliance with requirements for installation tolerances, metal panel supports, and other conditions affecting performance of the Work.

1. Install solid roof sheathing and verify that sheathing joints are supported by framing or blocking and that installation is within flatness tolerances required by metal roof panel manufacturer.

b. Examine roughing-in for components and systems penetrating metal panels to verify actual locations of penetrations relative to seam locations of metal panels before installation.

c. Proceed with installation only after unsatisfactory conditions have been corrected.

M05.04.10.17 PREPARATION.

a. Miscellaneous Supports: Install subframing, furring, and other miscellaneous panel support members and anchorages according to ASTM C754 and metal panel manufacturer's written recommendations.

M05.04.10.18 INSTALLATION OF UNDERLAYMENT.

a. Felt Underlayment: Apply at locations indicated below in shingle fashion to shed water, and with lapped joints of not less than 2 inches (50 mm).

1. Apply over the entire roof repair surface.

b. Flashings: Install flashings to cover underlayment to comply with requirements specified in Code 076200 "Sheet Metal Flashing and Trim."

M05.04.10.19 INSTALLATION OF ROOF PANELS REPAIR.

a. Install metal panels according to manufacturer's written instructions in orientation, sizes, and locations indicated on Drawings. Install panels perpendicular to supports unless otherwise indicated. Anchor metal panels and other components of the Work securely in place, with provisions for thermal and structural movement.

1. Shim or otherwise plumb substrates receiving metal panels.

2. Flash and seal metal panels at perimeter of all openings. Fasten with self-tapping screws. Do not begin installation until air- or water-resistive barriers and flashings that will be concealed by metal panels are installed.

3. Install screw fasteners in predrilled holes.

4. Locate and space fastenings in uniform vertical and horizontal alignment.

5. Install flashing and trim as metal panel work proceeds.

6. Locate panel splices over, but not attached to, structural supports. Stagger panel splices and end laps to avoid a four-panel lap splice condition.

7. Align bottoms of metal panels and fasten with blind rivets, bolts, or self-tapping screws. Fasten flashings and trim around openings and similar elements with self-tapping screws.

8. Provide weathertight escutcheons for pipe- and conduit-penetrating panels.

b. Fasteners:

1. Copper Panels: Use hardware-bronze fasteners.

c. Anchor Clips: Anchor metal roof panels and other components of the Work securely in place, using manufacturer's approved fasteners according to manufacturers' written instructions.

d. Metal Protection: Where dissimilar metals contact each other or corrosive substrates, protect against galvanic action as recommended in writing by metal panel manufacturer.

f. Watertight Installation:

1. Provide continuous soldered seam at panel repair.

g. Accessory Installation: Install accessories with positive anchorage to building and weathertight mounting and provide for thermal expansion. Coordinate installation with flashings and other components.

1. Install components required for a complete metal panel system including trim, copings, corners, seam covers, flashings, sealants, gaskets, fillers, closure strips, and similar items. Provide types indicated by metal panel manufacturer; or, if not indicated, provide types recommended by metal roof panel manufacturer.

h. Flashing and Trim: Comply with performance requirements, manufacturer's written installation instructions, and SMACNA's "Architectural Sheet Metal Manual." Provide concealed fasteners where possible and set units true to line and level. Install work with laps, joints, and seams that are permanently watertight and weather resistant.

M05.04.10.20 FIELD QUALITY CONTROL.

a. Manufacturer's Field Service: Engage a factory authorized service representative to test and inspect completed metal roof panel installation, including accessories. Report results in writing.

b. Remove and replace metal roof panels where tests and inspections indicate that they do not comply with specified requirements.

c. Additional tests and inspections, at Contractor's expense, are performed to determine compliance of replaced or additional work with specified requirements.

d. Prepare test and inspection reports.

M05.04.10.21 CLEANING AND PROTECTION.

a. Remove temporary protective coverings and strippable films, if any, as metal panels are installed, unless otherwise indicated in manufacturer's written installation instructions. On completion, of metal panel installation, clean finished surfaces as recommended by metal panel manufacturer. Maintain in a clean condition during construction.

b. Replace metal panels that have been damaged or have deteriorated beyond successful repair by finish touchup or similar minor repair procedures.

M05.04.10.22 METHOD OF MEASUREMENT. "Copper Roof Ceiling and Ornaments" will be measured by lump sum in accordance with the Contract Documents and/or as directed by the Engineer. All items are measured complete in place, including all preparation, accessories, and incidentals.

M05.04.10.23 BASIS OF PAYMENT. The accepted quantities of "Copper Roof Ceiling and Ornaments" will be paid for at the respective contract unit prices per lump sum. The price so stated shall constitute full and complete compensation for all labor, materials, equipment, and all incidentals required to finish the work, complete in place and accepted by the Engineer.

SECTION M.15
TRAFFIC CONTROL AND HIGHWAY LIGHTING SYSTEMS PEDESTAL

This section provides a specification for the items described below. Measurement and Payment for these items will be in other sections.

M.15.01 GROUND RODS

Ground rods shall be 5/8 inch diameter by 10 foot long of copper clad steel and shall be equipped with a exothermic welded clamp of sufficient size to receive the ground wire.

M.15.02 WIRE AND CABLE

M.15.02.1 Wire for Highway Lighting

a. General: Wire and cables shall be single conductor except where otherwise specified or indicated on the Plans. Conductors of sizes No. 10 AWG and larger shall be stranded. Wires of sizes smaller than 10 AWG shall be solid. All conductors shall have low smoke, zero halogen (LSZH) cross-linked polyolefin (XLP0) insulation, type XHHW-2 and shall be in compliant with NFPA 502.

The conductors shall be factory identified by printing the size and type of insulation. Each conductor shall be colored in accordance with the National Electric Code. Insulation color shall be constant throughout the length of the conductor and shall not otherwise need to be taped or tagged for identification. The color of the insulation of the neutral conductor shall be white. The remaining conductors shall not be white but shall be of dissimilar colors for identification. The grounding conductor, unless otherwise shown, shall be insulated to 600 volts. The grounding conductor insulation shall be green in color.

b. Conductors: Wire conductors shall be annealed copper conforming to the following specifications as applicable.

American Society for Testing Materials

ASTM B3 - specification for annealed copper wire.

ASTM B8 - specification for concentric-lay-standard, copper conductor, hard, medium hard or soft.

ASTM B33 - specification for tinned soft or annealed copper wire for electrical purposes.

c. Insulation: Insulation shall be indicated and shall conform to the following specifications as applicable.

American Society for Testing Materials

All wire within electrical room, the tunnel, underground, and boat wall sections of the tunnel shall be LSZH (Low Smoke, Zero Halogen), XLP0 (XHHW-2) and shall be in compliant with NFPA 502. All wiring shall have the following ratings:

1. VW-1
2. UL ST1 (Limited Smoke) per UL 1685
3. ICEA S-95-658 (NEMA WC 70) and UL 44 for type XHHW-2 wires
4. UL FT4
5. IEEE 1202
6. Suitable for use in wet or dry locations at temperatures not exceeding 90°C
7. ICEA T-33-655 (as applicable) – Guide for Low Smoke

All wire below finish grade shall be XLPE (XHHW-2).

d. Cable Jacket: Insulation shall be jacketed and have an outer covering as specified in the National Electric Code, Table 310-104(A), "Conductor Applications and Insulations Rated 600 Volts." Jacket shall be LSZH.

e. Insulation and Jacket Thickness: The minimum thickness of insulation and jacket thickness shall be as follows:

Conductor Size	Insulation Thickness in 64ths	Jacket Thickness in Inches
14 thru 10 AWG	3	.015
8 thru 2 AWG	4	.030
1 thru 4/0 AWG	5	.045
250 thru 500 MCM	6	.065
600 thru 1000 MCM	7	.065

M.15.02.2 Ground Wire: Ground wire shall be seven strand, No. 2 AWG or No. 6 AWG, soft drawn copper and shall conform to the requirements of **Para. b** of **Subsection M.15.02.1**.

M.15.02.3 Service Conductors: Service conductors shall be as shown on the Plans, type THHN or TWH and shall meet the requirements of **Para's. a** through **e** of **Subsection M.15.02.1**.

M.15.03 HANDHOLES AND PULL BOXES

M.15.03.1 Precast Handholes and Pull Boxes: NOT APPLICABLE.

M.15.03.2 Metal Pull Boxes

a. Type V Pull Box (Within Structure): NOT APPLICABLE.

b. Type W Pull Box (Surface Mounted): Type "W" pull boxes shall be type 316 stainless steel, thickness as indicated on the standard drawings. Boxes shall be furnished complete with tapped hubs, stainless steel checkered plate covers, type 316 stainless captive screws and neoprene gaskets. The cover shall be fastened using stainless steel screws. The box can be secured by using mounting lugs (optional) or using stainless steel bolts through back or bottom. Alternate methods of securing this box can be made using type 316 stainless steel unistrut or other means accepted by the Engineer. Sizes shall be as shown on the Plans.

Pull boxes shall be listed by Underwriters Laboratories and shall be tested for submersible application.

M.15.04 CONDUIT AND FITTINGS

M.15.04.1 Rigid Steel Conduit and Fittings: This conduit shall conform to Federal Specification WW-C-581. The latest revision of the Underwriters' Laboratories, Inc. Publication UL-6-Standard for Rigid Metallic Conduit also forms a part of this Specification. In addition to the above requirements, the exterior surface conduit including fittings shall be zinc-coated and the interior coated with zinc, enamel, or other corrosion resisting coating. The conduit shall be metalized galvanized, hot-dip galvanized or electro-galvanized.

Threads and couplings shall conform to the provisions of Appendix III of ASTM A53; "Basic Threading Data for Pipe."

M.15.04.2 PVC Plastic Conduit: Plastic conduit and elbows shall conform to the NEMA Standards Publication TC 2. Plastic fittings shall conform to the requirements of the NEMA Standards Publication TC 3. All conduit, elbows and fittings shall be UL listed.

M.15.04.3 Fiberglass Conduit: Fiberglass conduit shall be filament-wound reinforced epoxy resin. All conduit shall be manufactured in accordance with NEMA TC 14 and UL listed. Fittings shall be manufactured using the same materials and process as the conduit.

Joints shall be watertight and have a minimum pullout strength of 2000 pounds. Watertight joints may be formed by the use of a gasket or epoxy adhesive.

Hanger systems for fiberglass conduit shall be as shown on the Plans.
No adhesive anchors will be allowed to support the conduit hanger system.

Fiberglass Manufacturers:

A. Champion Fiberglass "Flame Shield XW"
B. FRE Composite "Breath Saver XW"
C. Approved equal provided it is a UL 2196 system for 2 hour fire rated circuits.

NFPA 502 compliant raceway system.
Wall thickness: 0.250"
Conduit shall meet or exceed the following characteristics:

Property	Value	Testing Method
Temperature Range	-60°F to +1850°F	ASTM E119 (1850°F 2 hours)
Vertical Flame Test FT4	passed	CSA 22.2
Surface Flammability	<2	ASTM E162
Tunnel Test, Flame Spread	<1	ASTM E84
Tunnel Test, Smoke Density	<1	ASTM E84
Tensile strength, ultimate	7,000 psi	ASTM D2105
Dielectric Strength	150 volts/mil	ASTM D149
Smoke Density, $D_{S4\ min}$	<1	ASTM E662
Smoke Density, D_{max} flaming	<30	ASTM E662
Smoke Density, D_{max} non-flaming	<20	ASTM E662
Water Absorption	<1.0%	ASTM D570
Coefficient of Thermal Expansion	0.51×10^{-5} in/in/°F	ASTM D696
Specific Gravity	1.70-1.75	ASTM D792
Barcol Hardness	68-72	ASTM D2583
Glass Content	65-75%	API 15LR
Modulus of Elasticity	$1.2 \times 10^{+6}$ psi	ASTM D2105

Couplings: Couplings shall be phenolic. Adhesive joints shall be as required per the conduit manufacturer to allow the cable and conduit system to pass the UL 2196 test.

Conduit bodies: Conduit bodies shall be XW phenolic.

Expansion/deflection fittings: Shall be XW phenolic.

Adhesive kit: Manufacturer specific epoxy adhesive kit including cold and warm weather application.

M.15.04.4 Expansion Couplings: The fittings shall be designed to compensate for expansion in a horizontal line of conduit at expansion joints in a structure and shall be as detailed.

Expansion fittings shall provide for a maximum of 4 inches longitudinal conduit movement, 2 inches in either direction. Expansion fittings shall provide for transverse conduit movement as indicated where required by structural conditions. Expansion fittings for RTRC Fiberglass conduit shall be XW and manufacturer specific to the conduit selected and approved for the project. Adhesive kits shall be manufacturer specific epoxy adhesive kit including cold and warm weather application.

Expansion fittings shall be bonded with heavy duty, two-bolt, ground fittings. Strap type clamps will not be acceptable.

M.15.04.5 Liquidtight Flexible Metal Conduit (LFMC): Flexible 316 stainless steel conduit, liquidtight provided with low smoke zero halogen (LSZH) jacket shall conform to UL 1. PVC jacket or material not permitted.

Fittings shall be of a type specifically designed for use with conduit and conform to UL 514B and NEMA 4X compatible.

M.15.07 SERVICE PEDESTAL

Service shall be at 120/208, three phase, four-wire. Neutral shall be bonded to ground at the main disconnect. Coordinate with RI Energy.

M.15.07.1 Enclosure: NOT APPLICABLE.

M.15.07.2 Panelboards and Miscellaneous Equipment

a. 120/240 or 120/208 Volt, Single-Phase, Three-Wire Service: For 120/240 or 120/208 volt services, panelboards and other miscellaneous electrical equipment shall be provided as shown on the Standard Details.

Panelboards and other equipment shall be of dead front safety type with breaker sizes as shown on the Plans, and all conductors enclosed in conduit or other approved enclosed wireways.

The circuit breaker mechanisms shall be quick-make, quick-break on manual as well as automatic and shall be trip-free from the handle so that the contacts cannot be held closed against circuit faults or abnormal overloads.

The main circuit breaker shall be two-pole 200-amp, rated 240 volts in a NEMA 1 enclosure.

The main breaker shall have a 200-amp trip setting and have a minimum interrupting rating of 22,000 amps at 240 volts.

Note: For installations where service is at 120/208 volts from a three-phase system, minimum interrupting rating shall be 65,000 amps at 240 volts.

The breaker shall have dual lug capabilities on the load side or an auxiliary distribution power block shall be provided.

Controlled lighting panelboard shall be 225-amp, single-phase, three-wire, with 32 circuit positions for 120/240 volt operation. All lighting branch circuit breakers shall be single-pole, rated 240 volts, with sizes according to the Plans. Single-pole breakers shall have an interrupting rating of not less than 10,000 amps at 120 volts. The mounting panel on which circuit breakers, busses and bolts for making copper connections shall be equipped with lock washers to prevent loosening. Riveter bus connections will not be acceptable. The busses shall be securely fastened to insulating bases and shall have copper based on 1,000 amperes per square inch copper density. Busses shall be drilled and tapped to permit future circuit changes without the necessity for additional machining. Panelboards shall be designed and assembled so any individual breaker may be removed without disturbing adjacent breakers or necessitating the removal or loosening of required insulation. All terminal lugs shall be copper, bronze or brass.

Miscellaneous load panelboard shall be rated 100 amps, 120/240 volts, single-phase, three-wire with a 60-amp main breaker and minimum of 12 single-pole positions.

M.15.07.3 Service Pedestal Concrete Mat: The service cabinet concrete mat shall be constructed of Class A(AE) concrete in accordance with **SECTION 601; PORTLAND CEMENT CONCRETE**, of these Specifications.

M.15.07.4 Photo-Electric Control: Photo-electric controls shall conform to the requirements of **Subsection M.15.05.3** of this Section, and shall mount inside the service pedestal or as indicated on the Plans.

M.15.07.5 Contactors: Contactors shall be rated for H.I.D. lighting inductive loads, 600 volts, 2- pole, continuous duty ampere as indicated and shall be mechanically held. Contacts shall be silver tungsten. A separate 120- volt circuit shall be provided for coil operation with a hand-off automatic selector switch. Contactor to be ASCO 920 or approved equal.

M.15.07.6 Poles: Poles for temporary work shall conform to U.S.A.S.I. Class 5. Poles shall be southern yellow pine treated in accordance with **Subsection M.11.03; Preservative Treatment**, of these Specifications.

M.15.08 SERVICE UNITS

a. Disconnect Switch: Disconnect switch shall be of the fusible type, heavy duty, 250 Volt A.C., NEMA 3R rain-tight and shall conform to Federal Specification W-S-865.

b. Fuses: Fuses shall be dual-element and shall be capable of carrying 500 percent of the indicated rating for a minimum of 10 seconds, shall have an interrupting rating of 100,000 RMS amperes and shall have standard National Electrical Code dimensions.

c. Disconnect Switches – Lighting Pedestals: For 240/480 volt and 120/208 volt services, a safety disconnect switch must be installed ahead of the meter socket for cold-sequence operation. The disconnect switch shall be rated 2-pole, 3-wire, 600-volt enclosed in a NEMA 3R enclosure. The switch shall have the capability of being locked with customer or utility padlocks for safety installation and removal of the utility meter.

d. Grounding: Neutral shall be bonded to ground at the main service disconnect. Coordinate with RI Energy. Ground rod shall be driven at main panelboard for service.

M.15.09 METER SOCKETS

Meter sockets shall be provided at all service pedestals, traffic signal controllers, intersection control beacons and counter stations. Meter sockets for all of the above applications shall be 5-terminal duncan type and meet all requirements of the local utility company. Meter sockets for traffic signal controllers and service pedestals shall include a manual by-pass.

The line side of the service conductors shall be encased in a watertight PVC conduit within the service enclosure or signal cabinet.

M.15.10 Methods of Measurement and Payment

Refer to Part T for Methods of Measurements and Payment.

PART T

TRAFFIC CONTROL SYSTEMS

SECTION T.01

ELECTRICAL WORK

This section provides a specification for the items described below. Measurement and Payment for these items will be in other sections.

T.01.01 DESCRIPTION:

This work consists of performing electrical work common to, but not necessarily limited to, the installation of traffic signals, highway lighting and illuminated signs at the locations indicated on the Plans or as directed by the Engineer, all in accordance with these Specifications, the National Electric Code, the National Electric Safety Code, and the electrical utility company.

The work includes all material, labor, equipment, and incidentals necessary to provide lighting systems, traffic signal systems and cable systems for police and fire alarm, complete in every respect, and ready for use as specified. The work includes excavation, backfill, conduit and appurtenances, whether encased in concrete, attached to structures or buried in the ground.

Wherever reference is made to the code of standards mentioned herein, the reference will be construed to mean the code or standard that is in effect on the date of advertisement for bids.

All workmanship will be first class and in accordance with the highest standards of the electrical industry.

T.01.02 MATERIALS:

Rigid steel conduit, PVC conduit, fiberglass conduit, handholes, pull boxes, manholes, wire and cable shall conform to the requirements specified in **SECTION M.15; TRAFFIC CONTROL AND HIGHWAY LIGHTING SYSTEMS**, of these Specifications.

Only materials listed and tested by nationally recognized laboratories, and so labeled or identified, will be considered for acceptance for the services indicated. All materials shall be new, and all electrical equipment shall bear the manufacturer's name, trademark, or other descriptive marking by which the organization responsible for the product may be identified. Other markings shall be provided giving voltage, current, wattage, or other ratings as are prescribed elsewhere in these requirements. Electrical equipment shall be designed, manufactured, tested and rated in accordance with ANSI and the National Electrical Manufacturer's Association. All markings shall be of a durability that will withstand the environment involved, as determined by the Engineer. Where two or more items of the class of equipment are required, these units shall be the products of the same manufacturer.

All materials shall be approved by the Engineer before installation.

T.01.03 CONSTRUCTION METHODS:

T.01.03.1 Foundations:

Foundations for mast arm and span poles, lighting standards, pedestal poles, service pedestals, controller cabinets, ground mounted and overhead sign structures, and other equipment shall be constructed of Class A(AE) air entrained concrete for cast-in-place units and Class XX(AE) for precast units, all conforming to the requirements specified in **SECTION 601; PORTLAND CEMENT CONCRETE.** Concrete for cast-in-place units shall be placed in accordance with **SECTION 808; CAST-IN-PLACE STRUCTURE CONCRETE MASONRY**, of these Specifications.

All foundations shall rest on firm ground and shall be placed monolithically. Conduits and anchor bolts shall be placed in proper position and shall be held in place by means of a template until the concrete sets. Forms shall not be removed until the concrete has hardened properly and not less than 24 hours after the concrete has been placed. All exposed portions of foundations shall be neatly finished with a wood float. The tops of foundations shall be finished flush with the finished grade or as detailed on the Plans.

Aluminum surfaces to be placed in contact with Portland cement concrete shall be given a heavy coat of an alkali-resistant bituminous paint before installation. The bituminous paint used shall meet the requirements of United States Military Specification MIL-P-6883. The paint is to be applied as it is received from the manufacturer without the addition of any thinner.

T.01.03.2 Bonding and Grounding:

Traffic signals, highway lighting, illuminated sign circuits, conduits and aboveground equipment shall be effectively bonded and grounded as hereinafter specified and as shown on the Plans for the respective installations. Bonding and grounding shall conform to the requirements of the National Electric Code and the utility company.

Ground wire and grounding rods shall conform to the applicable requirements set forth in **SECTION M.15 – TRAFFIC CONTROL AND HIGHWAY LIGHTING SYSTEMS**, of these Specifications.

The Contractor shall be responsible for maintaining 25 ohm to ground resistance in all systems.

T.01.03.3 Connection with Utility Services:

For electrical work, the Contractor shall install conduits and electric conductors as shown on the Plans, in accordance with the requirements of the utility company and subject to its approval. The Contractor will arrange with the serving utility to complete service connections.

T.01.03.4 Testing:

Upon the completion of each wiring system, and before any connection is made to operating equipment, the Contractor shall perform, in the presence of the Engineer, the following

tests of each circuit to determine whether the installations are in acceptable working order:

a. Tests for continuity.

b. Tests for grounds.

c. Tests for insulation resistance from circuit wires to ground, and between circuit wires. The insulation resistance shall not be less than the value specified in the National Electric Code.

With all equipment connected to the wiring system, a functional test shall be performed by the Contractor, in the presence of the Engineer, to demonstrate that the system as a whole, and all parts thereof, function as specified or intended herein. Any defective materials or faulty or improper installation shall be permanently corrected by repairs or replacements to be made by and at the expense of the Contractor, to the satisfaction of the Engineer and the utility company.

Lighting circuits shall be subjected to such other tests as may be required by the utility company. It shall be the responsibility of the Contractor to ascertain what tests are required and to perform these tests in the presence of the Engineer and the utility company's representative.

The cost of testing shall be included in the prices bid for other scheduled items of work as specified in **SECTIONS T.03 through T.14**, respectively.

T.01.03.5 Painting:

Signal heads, including hanger, shall be painted with two coats of federal yellow enamel, except that the interior of hoods shall be finished with two coats of flat black enamel, unless specified otherwise. Aluminum or galvanized steel fittings and parts shall not be painted unless part of an adjacent assembly is to be painted.

The cost of painting shall be included in the prices bid for other scheduled items of work as specified in **SECTIONS T.07 through T.09** and **T.11 through T.14**, respectively.

T.01.03.6 Topsoiling and Seeding:

Topsoiling and seeding after excavation and backfill shall conform to the applicable requirements of **SECTIONS L.01** and **L.02**, respectively, of these Specifications.

The cost of topsoiling and seeding shall be included in the prices bid for other scheduled items of work as specified in **SECTIONS T.04 through T.14**, respectively.

T.01.03.7 Shop Drawings:

The Contractor shall submit manufacturers' shop drawings, layout drawings and specifications for equipment and appurtenances for the approval of the Engineer, in accordance with **Subsection 105.02; Plans and Shop Drawings**, of these Specifications.

a. Design Computations:

Design computations for mast arms and poles, span poles and lighting standards shall be complete and shall include but not be limited to the following: consideration for all parts of the structure; consideration for all possible loading combinations including wind and ice loads; and the design stresses and allowable stresses for all components which comprise the proposed structure.

All complete shop drawings and design computations shall bear the stamp of a Professional Engineer licensed by the State of Rhode Island. Shop drawings shall be approved prior to fabrication, and it shall be expressly understood and agreed upon that said approval does not relieve the Contractor of its responsibility for the design, fabrication and erection of the structure.

b. Equipment Lists:

Within 60 days of signing the contract, the Contractor shall furnish, for the approval of the Engineer, a minimum of five copies of a listing of the controller equipment proposed for use under the contract. The listing shall be supplemented by catalog cuts, manufacturer's specifications, and other descriptive or pictorial data sufficient to identify and explain the method of operation and construction of the proposed equipment. Upon approval, the Engineer will retain four copies and return one approved copy to the Contractor.

T.01.03.8 Existing Systems:

Where existing systems are to be modified, the existing equipment and materials shall be salvaged and incorporated in the revised system, salvaged for other use by the Department, or removed and disposed of by the Contractor, as may be provided in the Plans or as specified. Material required to be salvaged shall be removed carefully and stockpiled on site at the location designated in the Contract Documents, or as directed by the Engineer. Existing equipment and materials specified for reuse, or to be reserved for the Department, which are disturbed, damaged or removed in performing the work shall be repaired or replaced with equivalent, new equipment and materials acceptable to the Engineer, at no expense to the State.

Existing systems or portions thereof may be abandoned in place only with written permission of the Engineer.

T.01.03.9 Lines and Grades:

It shall be the responsibility of the Contractor to arrange for the furnishing of lines and grades as may be necessary to lay out the work correctly, all as specified in **Subsection 105.08** of these Specifications.

T.01.03.10 Excavation and Backfill:

Excavation and backfill for the construction of manholes, handholes, foundations, conduits, cables and other appurtenances shall conform to the applicable requirements of

SECTION 203; STRUCTURE EXCAVATION AND BACKFILL, of these Specifications.

T.01.03.11 Disruption of and Damage to Existing Improvements:

All pavements, curbs, gutters, culverts, guardrail, sidewalks, walls, landscaping, conduit or wire, and all other existing improvements removed due to construction, damaged or injured by any reason of or resulting from the Contractor's operations, shall be replaced or reconstructed of similar materials in a manner satisfactory to the Engineer at no additional cost to the State. When placing foundations, handholes, or conduit in existing bituminous sidewalks, the entire width of sidewalk shall be replaced. In the case of concrete sidewalks, saw cuts shall be made at score lines and the entire square of concrete shall be replaced. Saw cuts shall be made at no additional cost to the State.

T.01.04 METHOD OF MEASUREMENT:

"Electrical Work" will not be measured separately but will be included in the measurement of specific items such as conduit, foundations, standards and posts, luminaires, traffic signal controllers and traffic signal heads. Measurement for payment will be as specified in **SECTIONS T.04 through T.14**, respectively.

T.01.05 BASIS OF PAYMENT:

"Electrical Work" will not be paid for separately but will be included in the price of specific items, as listed in the Proposal, such as conduit, foundations, standards and posts, luminaires, traffic signal controllers, wire and cable, and traffic signal heads, as specified in **SECTIONS T.04 through T.14**, respectively.

The cost of excavation and backfill for manholes, handholes, foundations, conduits, cables, and other appurtenances, shall be included in the prices bid for such structures and appurtenances.

SECTION T.04

WIRE AND CABLE

Item Code T04.9901 XHHW LSZH - 12 AWG
Item Code T04.9902 XHHW LSZH - 10 AWG
Item Code T04.9903 XHHW LSZH - 8 AWG
Item Code T04.9904 XHHW LSZH - 6 AWG
Item Code T04.9905 XHHW LSZH - 4 AWG
Item Code T04.9906 XHHW LSZH - 2 AWG

T.04.01 DESCRIPTION:

This work consists of furnishing and installing wire and cable of the type and at the locations indicated on the Plans, or as directed by the Engineer, all in accordance with these Specifications. This work also includes the use of material and equipment for furnishing and installing splice kits in handholes and manholes, as indicated on the Plans or as directed by the Engineer, all in accordance with these Specifications.

T.04.02 MATERIALS:

Wire, cable and splice kits shall conform to **Subsection M.15.02** of these Specifications.

T.04.03 CONSTRUCTION METHODS:

Splices, taps and terminations shall be made using premolded splice kits fabricated of 6061-T aluminum and insulated with EPDM rubber compound rated for 600 volts and capable of accepting copper conductors. This splice has four terminals and can be used for a two-, three-, and four-way splice application. The splice is to be suitable for submersible installations.

Note: Taped splices are allowed only as temporary installations, as directed by the Engineer. Taped splices must be “built-up” and rated for 600 volts using self-vulcanized high voltage tape covered with two (2) layers of PVC tape.

Wires and cables shall be handled carefully during storage. All conductors and cables shall be drawn into the conduit system without damage to covering sheath insulation or conductor. Wiring shall not be done until the raceway system has been completed. Only lubricant manufactured specifically to assist cable pulling shall be used.

Wires on poles shall be installed by a licensed electrician and/or a licensed journeyman.

Wiring installed in raceways shall have slack cable left at all pulling points. No wiring shall be installed until conduit systems have been approved by the Engineer.

Installation of splice kits shall be as recommended by the manufacturer and the National Electric Code. All splices shall be in a handhole, manhole or junction box.

The Contractor shall submit for approval the manufacturer's notarized certificates of

compliance for all wire and cable.

Contractor shall install in accordance with UL2196 and NFPA 502.

T.04.04 METHOD OF MEASUREMENT:

All "Wire and Cable" under “Item Codes T04.9901 XHHW LSZH – 12 AWG, T04.9902 XHHW LSZH – 10 AWG, T04.9903 XHHW LSZH – 8 AWG, T04.9904 XHHW LSZH – 6 AWG, T04.9905 XHHW LSZH – 4 AWG, T04.9906 XHHW LSZH – 2 AWG” will be measured by the linear foot of each type actually installed in accordance with the Plans and/or as directed by the Engineer.

Measurement shall be along the centerline of the conduit. A 5-foot allowance will be made for slacked cables in handholes. A 6-foot allowance will be made for slacked cables in traffic signal controller cabinets. Splices, splice kits, and fuses shall be considered incidental to wire and cable and not paid separately.

T.04.05 BASIS OF PAYMENT:

The accepted quantities of all "Wire and Cable" under “Item Codes T04.9901 XHHW LSZH – 12 AWG, T04.9902 XHHW LSZH – 10 AWG, T04.9903 XHHW LSZH – 8 AWG, T04.9904 XHHW LSZH – 6 AWG, T04.9905 XHHW LSZH – 4 AWG, T04.9906 XHHW LSZH – 2 AWG” will be paid for at their respective contract unit prices per linear foot of the various types as listed in the Proposal. The prices so-stated constitute full and complete compensation for all materials, equipment, tools, labor and all incidentals required to finish the work, complete in place and accepted by the Engineer.

SECTION T.05

HANDHOLES AND PULL BOXES

Item Code T05.9901 PULL BOX – 12" X 12" X6"
Item Code T05.9902 PULL BOX – 16" X 16" X6"

T.05.01 DESCRIPTION:

This work consists of providing Type "W" Pull Boxes on those structures indicated on the Plans. The work shall include pull boxes within the tunnel, tunnel boat wall, and within the electrical room. All such work will be in full accordance with these Specifications.

T.05.02 MATERIALS:

T.05.02.1 Precast Handholes and Pull Boxes:

Precast handholes and pull boxes shall conform to **Subsection M.15.03.1** of these Specifications.

T.05.02.2 Metal Pull Boxes:

Pull boxes shall conform to **Subsection M.15.03.2** of these Specifications.

T.05.03 CONSTRUCTION METHODS:

T.05.03.1 Plant Requirements for Precast Units:

a. **Casting:** NOT APPLICABLE.

T.05.03.2 Metal Pull Boxes:

Pull boxes shall conform to the details indicated on the Plans and shall be adequately anchored in place to prevent displacement. Surface mounted pull boxes shall be anchored with stainless steel mechanical anchors as detailed on Contract Plans.

T.05.03.3 Excavation: NOT APPLICABLE.

T.05.04 METHOD OF MEASUREMENT:

Item Code T05.9901 PULL BOX – 12" X 12" X6" will be measured by the number of units of each type actually installed in accordance with the plans and/or as directed by the Engineer.

Item Code T05.9902 PULL BOX – 16" X 16" X6" will be measured by the number of units of each type actually installed in accordance with the plans and/or as directed by the Engineer.

T.05.05 BASIS OF PAYMENT:

The accepted quantities of Item Code T05.9901 PULL BOX – 12” X 12” X6” will be paid for at their respective contract unit prices per each such type as listed in the Proposal. The prices so-stated constitute full and complete compensation for all materials, labor, tools, and equipment including concrete, ground wire, grounding clamps and support grips, ground rods, gravel, cast iron frame and cover, grounding of frame and cover, excavation and backfill, and for all incidentals required to finish the work, complete in place and accepted by the Engineer.

The accepted quantities of Item Code T05.9902 PULL BOX – 16” X 16” X6” will be paid for at their respective contract unit prices per each such type as listed in the Proposal. The prices so-stated constitute full and complete compensation for all materials, labor, tools, and equipment including concrete, ground wire, grounding clamps and support grips, ground rods, gravel, cast iron frame and cover, grounding of frame and cover, excavation and backfill, and for all incidentals required to finish the work, complete in place and accepted by the Engineer.

SECTION T.06

CONDUIT

Item Code T06.5220 2" SCHEDULE 80 POLYVINYL CHLORIDE PLASTIC CONDUIT - UNDERGROUND
Item Code T06.9901 ¾" LFMC
Item Code T06.9902 1" RTRC
Item Code T06.9903 2" RTRC

T.06.01 DESCRIPTION:

This work consists of furnishing and installing Rigid Steel Conduit, RTRC Fiberglass Phenolic Conduit and Schedule 80 Polyvinyl Chloride Plastic Conduit – Underground of the size specified, including the necessary fittings, at the locations indicated on the Plans or as directed by the Engineer, all in accordance with these Specifications.

T.06.02 MATERIALS:

Conduit and fittings shall conform to **Subsection M.15.04** of these Specifications.

T.06.03 CONSTRUCTION METHODS:

All work shall be performed strictly in accordance with the requirements of the National Electrical Code, latest Edition.

T.06.03.1 Rigid Steel Conduit:

Conduit shall be installed as shown on the Plans or as directed by the Engineer. Bends which are not smooth or which show any evidence of flattening or destruction of the protective coating will not be accepted. All joints requiring rethreading shall be made with a zinc-based, cold galvanized, spray-applied compound as approved by the Engineer, applied to the male threads. Oils shall be removed from the threads prior to applying the galvanizing compound. All threaded couplings shall be tightened until the ends of the conduit are brought together to form a tight connection.

A nylon pulling rope shall be installed in all conduits which do not carry conductors under the contract. Such pull rope shall be for subsequent use to facilitate pulling of cables. There will be no separate payment for the cost of the pull rope.

Conduit bends and elbows made in the field shall have a radius of not less than twelve (12) times the inside diameter of the conduit, and all such bends shall be made without crimping, heating, denting or otherwise damaging the conduit.

Conduit ends at handholes shall be supplied with insulated bonding bushings with threaded ends. All conduits shall be bonded to the ground rod within the handhole using #6 bare ground wire.

a. Conduit Underground:

Conduit underground refers to all conduit placed underground in non-paved areas and in paved areas where the pavement will be replaced as part of the project under other contract items. All conduit shall be grounded in accordance with the National Electrical Code, latest Edition. Ends that have bonding clamps shall be filled with sealing compound to prevent the entrance of moisture, except at handholes. All ground lugs shall be copper, bronze or brass. Underground conduit shall be placed at a minimum depth of 24 inches under vehicular travel areas and 18 inches under non-vehicular travel areas.

Conduits shall be placed on a 6-inch sand bed. Conduits within roadways shall be backfilled with Class 1 controlled low-strength material (CLSM) to the bottom of the gravel subbase. Yellow warning tape shall be placed 1 foot below finished grade.

When two or more conduits are placed in the same trench, conduit spacers shall be used. Spacers shall be placed at 6-foot intervals or as directed by the Engineer.

The Contractor shall immediately notify the Engineer of trench-bottom conditions that are suspected to be unsatisfactory. If the condition of the bottom of the trench is in any way unsatisfactory, as determined by the Engineer, the Engineer may require the Contractor to excavate additional material and replace it with clean gravel to provide a firm bearing for the conduit. The backfill shall be compacted in layers not more than 6 inches in thickness before compaction.

After the trench is backfilled, the Contractor shall, in the presence of the Engineer, test the installation by pushing or pulling a mandrel, not less than 1/4-inch less than the inside diameter of the conduit, through the entire length of the conduit. All debris, including stones and dirt, shall be removed. All damaged conduits shall be removed and replaced at the Contractor's expense.

b. Conduit Under Existing Pavement:

Conduit under existing pavement refers to all conduit placed under existing paved areas where removal of the pavement is required only for the placement of conduit and the pavement is to be restored as part of this item. Conduit under existing pavement shall be placed in accordance with all applicable requirements of **Para. a** of this Subsection. The pavement shall be replaced in accordance with the Plans regardless of the method of excavation. When conduit is placed in existing paved sidewalks, the sidewalk shall be replaced in accordance with **Subsection T.01.03.11** of these Specifications.

c. Conduit Overhead:

All conduit above grade shall be securely attached using clamps and/or hangers at intervals not exceeding 5 feet or as directed. All clamps and hangers shall be galvanized. A weatherhead shall be installed on all risers.

d. Conduit In or On Structure:

Conduit to be embedded in concrete structures shall be rigidly supported in the concrete form by methods and materials which will not cause injury to the zinc coating of the conduit.

Conduit installations on bridges and other structures shall be provided with expansion fittings at all structure expansion joints. The expansion joint fittings shall be installed as shown on the Plans and meet the requirements of **Subsection M.15.04.3** of these Specifications.

T.06.03.2 Fiberglass Conduit:

Fiberglass conduit shall be installed as shown on the Plans and in conformity with the requirements previously specified in **Subsection T.06.03.1** except those referring specifically to rigid steel conduit. Fiberglass conduit shall utilize manufacturer specific expansion and deflection fittings. Expansion and deflection fittings shall be installed at every expansion joint and as recommended by the manufacturer based on thermal expansion, assuming a 100°F+ temperature range). Fiberglass conduit shall be installed within the tunnel as indicated on Contract Drawings.

T.06.03.3 Liquidtight Flexible Metal Conduit (LFMC):

a. LFMC shall be used for connection from junction boxes to light fixtures.
b. For connection of equipment subject to vibration, noise transmission or movement.
c. Conduit supports shall be per NEC, Article 350.
d. All clamps, hangers, and supports shall be type 316 stainless steel.

T.06.04 METHOD OF MEASUREMENT:

Item Code T06.5220 2” SCHEDULE 80 POLYVINYL CHLORIDE PLASTIC CONDUIT – UNDERGROUND will be measured by the number of linear feet actually installed of the type or types indicated on the Plans and/or as directed by the Engineer, with no deduction for fittings and couplings.

Item Code T06.9901 ¾” LFMC will be measured by the number of linear feet actually installed of the type or types indicated on the Plans and/or as directed by the Engineer, with no deduction for fittings and couplings.

Item Code T06.9902 1” RTRC will be measured by the number of linear feet actually installed of the type or types indicated on the Plans and/or as directed by the Engineer, with no deduction for fittings and couplings.

Item Code T06.9903 2” RTRC will be measured by the number of linear feet actually installed of the type or types indicated on the Plans and/or as directed by the Engineer, with no deduction for fittings and couplings.

T.06.05 BASIS OF PAYMENT:

The accepted quantities of Item Code T06.5220 2” SCHEDULE 80 POLYVINYL CHLORIDE PLASTIC CONDUIT – UNDERGROUND will be paid for at their respective contract unit prices per linear foot for the type or types as listed in the Proposal. The prices so-stated constitute full and complete compensation for furnishing all materials, equipment, tools, and labor including fittings, couplings, saw cutting pavements, excavation and backfill, Class B bedding, restoration of existing ground surfaces including all materials necessary for such restoration, testing, and all incidentals necessary to satisfactorily finish the work, complete in place and accepted by the Engineer.

The accepted quantities of Item Code T06.9901 ¾" LFMC will be paid for at their respective contract unit prices per linear foot. The prices so-stated constitute full and complete compensation for furnishing all materials, equipment, tools and labor, including fittings, couplings, and all incidentals necessary to satisfactorily finish the work, complete in place and accepted by the Engineer.

The accepted quantities of Item Code T06.9902 1" RTRC will be paid for at the contract unit prices per linear foot of conduit as listed in the Proposal. The price so-stated constitutes full and complete compensation for furnishing all materials, equipment, tools and labor, including fittings, hangers and support systems, expansion fittings, and all incidentals necessary to satisfactorily finish the work, complete in place and accepted by the Engineer.

The accepted quantities of Item Code T06.9903 2" RTRC will be paid for at the contract unit prices per linear foot of conduit as listed in the Proposal. The price so-stated constitutes full and complete compensation for furnishing all materials, equipment, tools and labor, including fittings, hangers and support systems, expansion fittings, and all incidentals necessary to satisfactorily finish the work, complete in place and accepted by the Engineer.

Expansion Couplings:

The accepted quantities of expansion and deflection couplings of various types will not be paid for separately and are considered incidental to the conduit. No separate pay item or payment will be made for Expansion Couplings.

SECTION T.09

SERVICE PEDESTAL

Item Code T09.1000 SERVICE PEDESTAL

T.09.01 DESCRIPTION:

This work consists of furnishing and placing the service pedestal, the service riser, concrete mat, and anchor bolts at the locations indicated on the Plans or as directed by the Engineer, complete in every respect, fully wired, thoroughly tested and ready for use, all in accordance with these Specifications and Rhode Island Energy's latest version of Specifications for Electrical Installation. This work includes the demolition of the existing service pedestal and ancillary equipment. This work includes all coordination with RI Energy for permitting, shutdowns, cut overs, and all required materials and equipment to provide a fully function service pedestal.

Electric service shall be as specified on the Plans, and available at the indicated transformer. The Contractor shall provide the conductors of the size indicated.

T.09.02 MATERIALS:

All materials for this item of work shall conform to **Subsection M.15.07; Service Pedestal**, of these Specifications.

T.09.03 CONSTRUCTION METHODS:

All work shall be performed in accordance with the National Electric Code, National Electric Safety Code, and Rhode Island Energy's latest version of Specifications for Electrical Installation. The service pedestal shall be installed as shown on the Plans or as directed by the Engineer. The work under this item shall include all conduit contained within the concrete base. The pedestal shall be installed on the concrete mat as indicated on the Plans with the power distribution panel mounted inside. The concrete pad shall be placed on 12 inches of gravel subbase. The enclosure shall be made watertight. A bead of silicon sealer shall be applied to the base of the cabinet, inside and out. All electrical conductors within the cabinet shall be enclosed in PVC conduit. The electrical components shall be mounted with machine screws and wired as shown on the Plans or as directed. All rigid steel conduits in the service cabinet shall be bonded together and grounded to the cabinet with No. 6 AWG bare copper conductors. A ground grid system consisting of two (2) ground rods and #2 bare copper wire shall be installed around the foundation and as shown in the Standard Details. Foundation rebar and pedestal enclosure are to be bonded to the ground grid.

The Contractor shall provide a shop drawing of the service pedestal foundation showing the location of all conduit.

T.09.04 METHOD OF MEASUREMENT:

Item Code T09.1000 SERVICE PEDESTAL will be measured by the number of units actually furnished and installed in accordance with the Plans and/or as directed by the Engineer.

T.09.05 BASIS OF PAYMENT:

The accepted quantities of Item Code T09.1000 SERVICE PEDESTAL will be paid for at the contract unit price per each as listed in the Proposal. The price so-stated constitutes full and complete compensation for all material, labor and equipment, including furnishing and installing the service pedestal, anchor bolts, concrete foundation, grounding system, crushed stone, excavation and backfill, meter socket, contactor, panelboard, photo control, relays, neoprene gasket, grounding bushings and ground wire, and for all incidentals required to finish the work, complete in place and accepted by the Engineer.

CODE T07.9901, T07.9902, T07.9903, T07.9911, T07.9922 & T07.9933
FURNISH AND INSTALL TUNNEL LUMINAIRE – 102W (Type L1 & L4)
FURNISH AND INSTALL TUNNEL LUMINAIRE – 210W (Type L2)
FURNISH AND INSTALL TUNNEL LUMINAIRE – 140W (Type L3)
FURNISH TUNNEL LUMINAIRE (SPARE) – 102W (Type L1 & L4)
FURNISH TUNNEL LUMINAIRE (SPARE) – 210W (Type L2)
FURNISH TUNNEL LUMINAIRE (SPARE) – 140W (Type L3)

DESCRIPTION. This work consists of furnishing and installing fully functional LED luminaires and associated mounting materials and furnishing spare luminaires (not installed), all in accordance with these Specifications.

Manufacturer:

Acceptable luminaire manufacturer shall be the Signify Lumec. Substitutions are not permitted unless approved by the Owner during bid phase. Alternate product must meet or exceed stated specifications and shall be similar in appearance to Lumec Tunnel View series. Refer to Alternate Fixture Calculations for calculations requirements.

Request for Approved equals and Questions
must be submitted ELECTRONICALLY IN MICROSOFT WORD
FORMAT to RIPTA Contracts Manager by:

1. Date: xxx
2. Time: 1:00 p.m. Eastern Time
3. Response to approved equals: 10 - 14 days prior to proposal opening.

Please submit all of your questions in writing in one document by the deadline above; do not submit them piecemeal.

Requests for Approved Equals must be accompanied by adequate Technical Information for the Authority to review. Requests submitted with insufficient information will not be considered.

Requests for Approved Equals/Questions submitted after the deadline will NOT be considered.

It should be noted that Requests for Approved Equals/Questions can be used for both questions regarding the technical specifications and regarding contractual terms and conditions.

Approved Equals must be submitted by the Prime Contractors only. Potential Subcontractors must coordinate with Prime Contractors for submission of any products they wish to submit.

Manufacturer Experience Record:

Luminaire manufacturer shall have a minimum of 5 years' experience manufacturing LED roadway and/or tunnel luminaires. The manufacturer(s) shall have a minimum of 5000 total LED roadway and/or tunnel luminaires 1000 of which are in tunnels installed on a minimum of 10 separate installations, all within the continental U.S.A.

Manufacturer of LEDs chips, engines, and modules components shall have been in the business for more than 15 years and have a proven track record for similar installations.

Warranty:

The entire luminaire and all its component parts shall be covered by a 10-year warranty. Failure is when the luminaire or any of its component parts fall out of compliance with this specification as modified by the following conditions:

1. No light output (failed LED Modules) from more than 10 percent of the entire LED array.
2. The surge protector fails to pass IEEE/ANSI C62.41.2 criteria.
3. The luminaire manufacturer may exclude lightning damage, hail damage, vandalism, abuse, or unauthorized repairs or alterations from special warranty coverage.
4. The warranty by the luminaire manufacturer shall be valid for all installations of procured products, regardless of the Installing Contractor. The Manufacturer will be allowed to inspect, at no cost to the Department with the Engineer present, the installation of the product. Should any modifications be required regarding the installation of the product(s), it will be at the expense of the Contractor.
5. In addition to the luminaire unit and material cost the warranty shall also include all luminaire delivery and handling costs. Luminaires and accessories shall be securely packaged, labeled, and shipped to avoid damage or distortion.

Testing:

Photometric Test(s): A hard copy photometric report, completed in accordance with the appropriate IESNA testing procedure, shall be accompanied with a CD/DVD or flash media that includes the data in IESNA format for each luminaire type submitted. All tests submitted must have been completed within the past 3 years. Information can be emailed upon an approved request from the Engineer of Record.

The photometric report must include:

1. Iso-Illuminance Diagram (20-foot mounting height – no tilt). Diagram to include horizontal illuminance, 1/2 maximum candela trace and maximum candela point.
2. Candela distribution tabulation.
3. Coefficient of utilization and flux distribution analysis.
4. Maximum plane and maximum cone of candela.

Paint Adhesion and Finish Test(s): The manufacturer shall submit a sample piece of each cast or fabricated part(s) for testing. The manufacturer shall use the same preparation treatment, the same paint, and the same method of application the submitted luminaire shall receive. All test samples shall be submitted to Engineer for review and acceptance after testing has been completed.

Tests shall include the following (as applicable):

Cast Aluminum Parts: All exposed cast aluminum parts shall be subjected to the following tests (Tests shall be performed in 4 locations on the sample):

ASTM3359 - Test Method B, Rating shall be 5B. This includes the housing, door frame, and latch(s). Test shall be performed in 4 locations on the sample.

ASTM D2247, ASTM D714, ASTM B117, ASTM D1654 – Corrosion Resistance tests in accordance with the noted ASTM documents. The procedure to follow shall be similar to

that illustrated in AAMA 2604 – 7.8. Note, test shall be conducted on 4 pieces of the cast parts that have been finished using the production paint method.

AAMA 2604 – 7.7 Chemical Resistance

AAMA 2604 – 7.8 Corrosion Resistance

Extruded Parts: All exposed extruded parts shall be subjected to the following tests (Tests shall be performed in 4 locations on the sample):

AAMA 2604 – 7.4 Film Adhesion

AAMA 2604 – 7.5 Impact Resistance

AAMA 2604 – 7.7 Chemical Resistance

AAMA 2604 – 7.8 Corrosion Resistance

Fabricated Aluminum and Steel Parts: All exposed fabricated parts shall be subjected to the following tests regardless of material. (Tests shall be performed in 4 locations on the sample):

AAMA 2605 – 7.4 Film Adhesion

AAMA 2605 – 7.5 Impact Resistance

AAMA 2605 – 7.7 Chemical Resistance

AAMA 2605 – 7.8 Corrosion Resistance

ASTM D 522 - The flexibility of the finish shall withstand a 180-degree bend over a ¼ inch mandrel diameter without loss of adhesion or cracking.

Dust and Water Intrusion Test(s): The manufacturer shall provide written documentation that the luminaire(s) have been tested in accordance with IEC 60529 and have successfully passed the requirements to obtain an IP66 certification. The test report must be submitted as part of the approved submittal.

High Pressure Water Spray Test(s): The manufacturer shall provide written documentation that the luminaire(s) have been tested in accordance with ANSI C136.27. The test data, procedures, and results report shall be completed in writing and shall be submitted for review and concurrence.

Vibration Test: The manufacturer shall submit the results of the luminaire submitted to the ANSI 136.31-2018 test. However, the same luminaire and mounting plate shall be used in all planes of test.

Alternate Fixture Calculations: Calculations are required if substitute luminaire is proposed during the bid phase. Refer to Manufacturer section.

Alternates will require submittal of a lighting calculation package to show the new design meets the project lighting requirements (established in this section). The calculation package will include all relevant information and data as it relates to tunnel lighting and the latest version IES RP-8, Chapter 14 Tunnel Lighting recommended practice. The calculation shall be completed

using the latest version of Lighting Analysts AGI 32. All tunnel surfaces shall have the proper reflectance's as shown in this section.

Full lighting layout for the entire portal-to-portal tunnel bores, both eastbound and westbound.

The layouts will include identifiable zones, fixture spacing information, switching and dimming schemes, circuiting, roadway lighting grids (illuminance and luminance), wall lighting grids (illuminance), veiling luminance ratio for daytime interior and nighttime zones, and flicker calculation.

Submittal of electronic AGI32 (.agi) files, photometric (.ies) files, printed (.pdf) formal reports of proposed design detailing all the requirements stated here within.

In addition to the lighting calculation package, revised structural details will need to be submitted including to account for any differences in luminaire mounting brackets.

Lighting Design Requirements: Tunnel Lighting Illumination Requirements for both eastbound and westbound travel directions; tunnel illumination has been developed by following the guidelines and recommendation of IES RP-8, Chapter 14, following the 'Step Method' with a Safety Rating Number (SRN) of 4.7, AADT > 2,400, and a design driving speed of 20 mph. The products selected for submission approval must meet RP-8, Chapter 14 recommendations for wall illumination, uniformity ratios, flicker, and the following roadway luminance requirements:

Tunnel Lighting Design Requirements - Eastbound

Zone	**Luminance (cd/m^2)**	**Distance (ft)**
Threshold 1 (TH1)	96	65
Threshold 2 (TH2)	67	21
Transition 1 (TR1)	39	88
Transition 2 (TR2)	10	117
Interior Zone (INT)	4	Varies (remaining tunnel length)
Nighttime (N)	4	Portal-Portal

Tunnel Lighting Design Requirements - Westbound

Zone	**Luminance (cd/m^2)**	**Distance (ft)**
Threshold 1 (TH1)	86	65
Threshold 2 (TH2)	60	21
Transition 1 (TR1)	35	88
Transition 2 (TR2)	9	117
Interior Zone (INT)	4	Varies (remaining tunnel length)
Nighttime (N)	4	Portal-Portal

Quality Assurance: Manufacturer shall provide documentation of quality assurance procedures including the following:

1. A Quality Audit Checklist shall be included for approval by the Engineer and shall include the following verification points, where applicable:
    a. Torque equipment calibrated daily
    b. Traceability/pass test label inside the fixture
    c. Nameplate label orientation
    d. Light engine/reflector orientation
    e. NYX label on mounting bracket
    f. XVOLT transformer installation
    g. Interior paint coverage
    h. Proper installation of paint plugs within fastener holes. No paint in threads.
    i. Proper thread depth identified within each fastener hole
    j. Correct fasteners installed into each hole utilizing Nyloc patch fasteners where applicable
    k. Fasteners started by hand to eliminate cross threading
    l. Door hinge brackets installed/connected
    m. Utilize mounting bracket assembly jig to validate correct brackets, orientation, & flatness
    n. Isolation washers on mounting bracket
    o. Fuse zip tied with proper wire management to ensure accessibility for replacement
    p. SPD securement strap excess routed under bracket and away from wiring
    q. Slotted washer under screw head fastening drivers to ensure grounding
    r. Utilize manual torque wrench to validate torqued fasteners with clamped bolt heads
    s. Witness marks applied to fasteners (Bracket and J-box)
    t. Correct number of washers in mounting stack up (1 stainless steel washer under bolt head)
    u. Isolation washer on door/j-box closing fasteners (fasteners stainless steel)
    v. J-box mounting fasteners with proper stack up (bolt, stainless steel washer, nylon washer)
    w. NYX barcode on exterior of fixture
    x. Last 4 digits on exterior of fixture (hand write in box)
    y. Carton label
    z. Traceability/pass label on carton
    aa. Safety lanyard
2. A video shall be provided of luminaire production showing quality assurance procedures are being followed.
3. Allowance for RIPTA to spot check 1 luminaire per 500 luminaries shipped at no cost to the Contractor. Manufacturer shall provide suggested testing procedure to be followed to verify quality procedures are being followed.
4. A Certificate of Compliance shall be provided for the complete luminaire and each lot of bolts used on the luminaire.

Submittals:
All submitted information shall employ the terminology, classifications, and methods prescribed in Section 722 Applicable Publications. Shop Drawings shall be submitted in an organized and easy to follow format. Any material that is judged to be hard to read, confusing and/or illegible it will not be reviewed and returned, “revise and resubmit”.

Failure to provide the following information with the submittal will give cause to reject the submission in its entirety and be returned incomplete without supporting comments. Until all submittals have been returned in hard copy form with a status of “Approved” or “Approved as Noted”, no production of any product defined in this section shall be completed. Any production shall be at the Contractors/manufacturers own risk.

1. Product Data: For each luminaire, arranged in the order of lighting unit designation. Include data on features, accessories, finishes, and the following:
    a. Physical description of fixture, including dimensions and verification of indicated parameters. Including descriptive literature and catalogue cuts for, but not limited to, luminaire, LED driver, and surge protection device.
    b. Luminaires’ weight including bracket, effective projected area, details of attaching luminaires, accessories, and installation and construction details.
    c. Manufacturer’s recommended replacement parts list.
    d. LED Driver/Power Supply: description, operating characteristics, electrical data, component/capacitor temperature rating and reliability testing report from an independent laboratory including mean-time-between-failure (MTBF).
    e. LEDs and Printed Circuit Board Construction.
    f. LED type, ratings and description including heat dissipation design indicating margin between the maximum rated LED junction temperature and the junction temperature at operating current.
    g. Photometric report illustrating iso-illuminance for the project mounting height, classification type and cutoff characteristic. All photometric files presented shall be prepared and certified by and independent testing laboratory.
    h. Independent laboratory IESNA LM-79, LM-80, and TM-21 Reports.
    i. Luminaire IESNA distribution classification and TM-15 BUG rating.
    j. All components shall be submitted with a list of all standards for which the product conforms with.
    k. Submittals shall include proper Ingress Protection (IP Rating) and UL Listing documentation for all the submitted products.
    l. All Test Reports as specified within this section.
    m. Written Warranty that complies within this section.
2. Shop Drawings: Catalog cuts and manufacturers drawings.
    a. Wiring Diagrams: Power, and control wiring.
    b. Coordination Drawings
    c. Mounting and connection details, drawn to scale, for luminaires with all requirements specified here within.
    d. Weight of the fixture inclusive of the bracket, LED Driver and controller.
    e. Mounting and installation details drawn to scale.
3. Operation and Maintenance Data: For luminaires to include in maintenance manuals.
4. Samples: Provide a sample fixture luminaire types “L1” and “L2”. Sample shall contain the exact components as the postproduction fixture. These samples will remain the property of the Authority to be used by the engineer for quality assurance purposes during and after the project installation.
5. Calculations (if required): Provide lighting calculations according to the section “Alternative Fixture Calculations” above.
6. Manufacturer Experience Record
7. Quality Assurance Procedures and checklist.

MATERIALS. Tunnel luminaires and tunnel lighting controls shall conform to Subsection M.15.05, of these Specifications and the following:

General:

Fixtures shall be grounded in accordance with Rhode Island Electrical Code.

All luminaires specified in the section shall be delivered and clearly marked with the manufacturer's name, catalog number, voltage, source type, maximum wattage, driver type, and fixture type designation.

Project documents are developed using Signify Lumec Tunnel View Medium or Tunnel View Large, Alternate manufacturers include Holophane or Kenall. The use of alternate luminaire manufacturers may require the contractor, at no cost to the project, to alter quantity, and mounting requirements to achieve the design requirements included herein.

Luminaire:

Provide complete luminaire as shown on the plans and as specified within this document, with an LED source from a nominal 277 Volt, 60 Hertz power source and shall be capable of starting and operating the specified luminaire within the limits specified by the luminaire manufacturer. The luminaire shall contain a completely prewired integral driver and an optical assembly with a photometric distribution as specified within these specifications.

All materials, equipment, and devices shall, as a minimum, meet the requirements of UL where UL standards are established for those items and the requirements of NFPA 70 and 502. The luminaire shall be UL/cUL Listed SUITABLE FOR WET LOCATIONS.

Type L1 & L4: The luminaire defined in this section as "Type L1 and Type L4" and shall be equal to the Signify Lumec Tunnel View medium series luminaire having the catalog number: TULM-64L530-740-G1-SN-UNV-API-F1-NER-SP2-BXK-SAFETY CABLE. In addition to the previous sections, the following characteristics shall be provided:

102 watts prior to the addition of the control module, producing 13,737 initial lumens at 4000K CCT and a CRI of 70.

Optical Distribution shall have a IES roadway classification of Type V Ceiling Mount Long & Narrow, and a BUG Rating of B3 U0 G3. The distribution illustrated is a representative of the distributional characteristics required. The curve illustrates that Curve 1 (blue) is the cross-sectional characteristics and Curve 2 (red) represented the horizontal distribution. The front zonal lumens between 0 and 90 degrees shall be 6,867 with 6,870 lumens in the back 0 to 90-degree range.

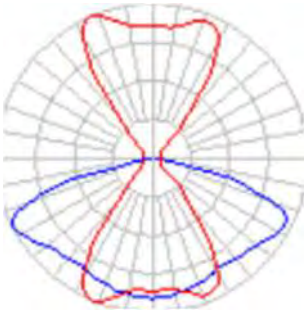

Type L2: The luminaire defined in this section as "Type L2" and shall be equal to the Signify Lumec Tunnel View large series luminaire having the catalog number: TULL-96L700-740-G1-SN-UNV-API-F1-NER-SP2-BXK-SAFETY CABLE. In addition to the previous sections, the following characteristics shall be provided:

210 watts prior to the addition of the control module, producing 26,661 initial lumens at 4000K CCT and a CRI of 70.

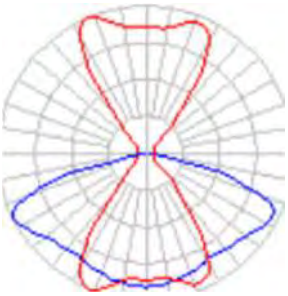

Optical Distribution shall have a IES roadway classification of Type V Ceiling Mount Long & Narrow, and a BUG Rating of B3 U0 G3. The distribution illustrated is a representative of the distributional characteristics required. The curve illustrates that Curve 1 (blue) is the cross-sectional characteristics and Curve 2 (red) represented the horizontal distribution. The front zonal lumens between 0 and 90 degrees shall be 13,327 with 13,334 lumens in the back 0 to 90-degree range.

Type L3: The luminaire defined in this section as “Type L3” and shall be equal to the Signify Lumec Tunnel View medium series luminaire having the catalog number: TULM-64L530-740-G1-SN-UNV-API-F1-NER-SP2-BXK-SAFETY CABLE. In addition to the previous sections, the following characteristics shall be provided:

140 watts prior to the addition of the control module, producing 17,331 initial lumens at 4000K CCT and a CRI of 70.

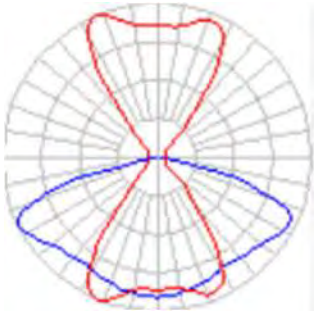

Optical Distribution shall have a IES roadway classification of Type V Ceiling Mount Long & Narrow, and a BUG Rating of B3 U0 G3. The distribution illustrated is a representative of the distributional characteristics required. The curve illustrates that Curve 1 (blue) is the cross-sectional characteristics and Curve 2 (red) represented the horizontal distribution. The front zonal lumens between 0 and 90 degrees shall be 8,653 with 8,658 lumens in the back 0 to 90-degree range.

Luminaire Housing:

The luminaire housing shall consist of a die cast construction of low copper aluminum (less than 0.1 percent or less) or consist of 16-gauge 316 stainless steel. The housing shall be completely sealed using a limiting gasket and secured together by means of stainless-steel hardware.

Fixture manufacturer shall coordinate with the contractor and supply the appropriate connectors/plugs/couplings for power and control to be feed to their appropriate junction boxes to ensure that connectors are compatible.

Provide stainless steel safety lanyard for all ceiling mounted fixtures. Lanyard shall be installed according to manufacturer’s installation and instruction sheet.

Provide service tag uniquely identifying components of each luminaire.

Bird spikes shall be provided for each luminaire.

Fixture brackets must be heavy duty, 14-gauge, Type 316 stainless steel and stiff enough to limit fixture displacement in a mounted condition. Brackets shall not deform when being installed and made secure in the manner depicted on the drawings and described herein. Luminaire shall be installed according to manufacturer’s installation and instruction recommendations.

Fixture Hardware: Manufacturer is responsible for all compatibility testing between components. Latch and release mechanism, hinges, pins and other retaining parts of fixtures: screws, bolts or

other assembly and mounting parts shall all be stainless steel. All nuts shall have captive externally footed lock washers. Neoprene pads, isolation washers or gaskets shall be used to separate any dissimilar metals subjected to corrosion by galvanic action. This includes any and all locations where the Stainless-Steel hardware may come into contact with the aluminum fixture housing.

The luminaire shall bear the “UL 1598 Listed SUITABLE FOR WET LOCATIONS AND DIRECT SPRAY” label. Construction shall conform to UL1598 – Suitable for Marine Duty Saltwater Applications.

To prove watertightness and dust-tightness, the luminaire shall be tested to International Standard IEC 60598 and fully meet the tests for the IP66.

Wiring within the luminaires shall conform to the requirements of NEC and UL. Conductor size, temperature rating, voltage rating and manufacturer clearly marked on the insulation of each conductor. Unless otherwise specified, the housing of each lighting luminaire shall be provided with a separate, factory-installed, grounding device.

Luminaires shall have integral time delay fusing.

Housing Finish:

All luminaire surfaces shall be finished on all sides of each product. All finishes shall be applied such that the entire assembly is rendered completely corrosion resistant for the service intended. Once the finish is applied, no additional holes will be acceptable.

Paint Finish (for aluminum housings only):

Shall be cleaned and treated utilizing the Alodine 5200 product procedures.

The base coat shall be a PPG 590-534 Cathodic Epoxy E-coat applied 0.08 to 1.20 mil (2.03 to 30.48 microns) in a single coat application, followed with a TGIC Powder coat applied to 2.0 to 4.0 mil (50.8 to 101.6 microns) of the approved RAL color in a single coat application. The finish shall be gray and applied as specified.

LEDs:

The LED light engines or refractor/reflector assemblies shall be fully protected against outside contaminants.

LEDs used by the luminaire manufacturer shall be identified and direct sourced from the manufacturer of the LED and shall be certified by the manufacturer of the luminaire as being the LED type and rating used in the manufacture and design of the photometric and thermal characteristics of the luminaire.

The LED module comprised of multiple LEDs shall be connected such that individual LED failures may occur without affecting any other LEDs on the PCB.

The overall design of the thermal package shall provide a temperature margin when operating at the maximum rated driver current in a 50 degrees C ambient temperature not to exceed the maximum allowable LED junction temperature.

The Correlated Color Temperature (CCT) shall be 4000K +/- 250K with minimum CRI of 70.

Drivers:

The integral constant current AC LED 120-277V 0-10V dimming driver shall be rated for 100,000 hours by the manufacturer of the driver and capable of operating the COB LED's at 1000mA. The driver shall be class A. The driver power factor shall be a minimum of 90%. The driver's total harmonic distortion shall not exceed 20%. The driver shall be damp rated minimum with an ambient operating temperature range between -40 to 55°C. Surge protection shall also be internal to the fixture by the manufacturer, the surge protection device (SPD) shall meet 10KV/5KA per ANSI/IEEE C62.41 2-2002.

The internal control modal shall be from the same manufacturer as specified in Section T07.9905 Tunnel Lighting Controls. The control module shall be installed in the fixture housing for UL, vibration and waterspray testing. The tunnel control module shall be designed for 120-277 VAC LED installations. The control module shall allow for 2-way communication over a power line control protocol to the main tunnel lighting controller. The module shall allow for alarms and monitoring of the fixture including but not limited to burn hours and power consumption. The control module shall also be capable of 0-10V diming. Power consumption shall be under 3W. The enclosure shall be a minimum of IP 66 rated.

Labels:

There shall be two adhesive backed fixture labels provided for each luminaire. Labels shall be applied in-field by the installing contractor. One label shall be positioned on the exterior housing face of the luminaire so that it is easily and quickly identified. The second shall be affixed inside the luminaire on the housing so that it is clearly legible when the luminaire door is opened.

The label shall be produced by Graphic Products Ultra Aggressive Vinyl / DuraLabel Toro. Equal products may be submitted for engineer of record approval.

The fixture label shall be of the size, shape, and style as depicted in the contract documents. The label shall be adhesive backed with a white background and bold black lettering.

The label shall be a 3.8 mil thick satin white, high tensile, polyvinyl chloride film with 1.5 mil thick "ultra-aggressive" permeant pressure sensitive adhesive, the 7-mil thick liner shall be made of 100% polymer.

The adhesion properties of the label shall meet or exceed the (Pressure Sensitive Tape Council) PSTC-1, 15 min, RT 70-degree F test method for 5.0 lbs./in.

Materials shall be stored in accordance with manufacturer's requirements.

Apply label in accordance with Manufacturer's recommendations. Printing of tunnel luminaire number on to the label shall be completed with the label manufacturer's recommended thermal transfer printer. The printer shall be standalone without the need for a computer to allow for infield printing capability. Printer to become property of RIPTA at no additional cost once installation is complete.

CONSTRUCTION METHODS.

Performance Requirements:

Perform all Work in accordance with the requirements of NFPA 70 and 502, and those authorities having jurisdiction. Verify that other construction work is complete to the extent that Luminaires may be installed. Install Luminaires of the type required in the locations shown and make all final electrical connections. Provide accessories as required to properly install the material defined in this section even though these accessories may not be specifically indicated on the Plans. Provide appropriate support(s) for each luminaire. Luminaires and support elements shall not be mounted on or in contact with ducts or pipes.

Installation:

A. Install rows of luminaires accurately on straight lines unless otherwise indicated on the Plans. Install all necessary hangers, channels, bars, supports, and rods required to align Luminaires.

B. Luminaire Adjustment: Provide labor and materials for final adjustment of all luminaires to the Quality Assurance Manager's or MPA Resident Engineer's satisfaction. Adjustment shall take place immediately before the work is accepted by the Quality Assurance Manager.

C. Cleaning. Follow the cleaning procedures recommended by the luminaire manufacturer. Clean the luminaires during installation, as to render them free of foreign material, substances, or film on the luminaire.

D. Luminaire Operation. Ascertain and make sure that the LED luminaires installed are exactly as specified for each luminaire type with regards to the number of LED and distribution required for the given location. Replace without cost to the project inoperative LED panels, which fail to operate prior to final acceptance of the work.

Field Quality Control:

Operating Tests: Upon completion of the installation, conduct an operating test to demonstrate that the lighting systems and associated equipment operate in accordance with the performance requirements of the Tunnel Lighting System. The following tests shall be successfully performed, and the results submitted to the Quality Assurance Manager prior to project acceptance:

The Contractor shall provide a witness test in the presence of the Engineer to ensure that installed circuiting is verified against the Contract Documents. This testing may be witnessed by a RIPTA representative.

The Contractor shall perform a system performance test. This test will comprise of energizing all light fixtures for a duration of ten (10)-days/twenty-four (24) hours without any component failures. In the event of a component failure and after the failure is addressed and resolved the test will need to repeat as necessary to provide a twenty-four (24) failure free period.

Should any of the tested luminaires of a given type, distribution, and wattage fail to satisfy the specifications or fail to perform per approved submittal information, the luminaire of that type, distribution, and wattage shall be unacceptable and shall be replaced. Replacement luminaires must meet the specifications and therefore, the submittal and testing process shall be repeated in its entirety. Any repeated testing procedures will be the Contractors responsibility.

Contractor is not entitled to any utility rebates.

METHOD OF MEASUREMENT.

Item Code T07.9901 Furnish and Install Tunnel Luminaire – 102W (Type L1 & L4) will be measured by the number of each installed in accordance with the Plans and/or as directed by the Engineer.

Item Code T07.9902 Furnish and Install Tunnel Luminaire – 210W (Type L2) will be measured by the number of each installed in accordance with the Plans and/or as directed by the Engineer.

Item Code T07.9903 Furnish and Install Tunnel Luminaire – 140W (Type L3) will be measured by the number of each installed in accordance with the Plans and/or as directed by the Engineer.

Item Code T07.9911 Furnish Tunnel Luminaire (Spare) – 102W (Type L1 & L4)) will be measured by the number of each spare furnished in accordance with the Plans and/or as directed by the Engineer.

Item Code T07.9922 Furnish Tunnel Luminaire (Spare) – 210W (Type L2) will be measured by the number of each spare furnished in accordance with the Plans and/or as directed by the Engineer.

Item Code T07.9933 Furnish Tunnel Luminaire (Spare) – 140W (Type L3) will be measured by the number of each spare furnished in accordance with the Plans and/or as directed by the Engineer.

BASIS OF PAYMENT.

The accepted quantities of Item Code T07.9901 Furnish and Install Tunnel Luminaire - 102W (Type L1 & L4) will be paid for at the contract unit price per each as listed in the Proposal. The price constitutes full and complete compensation for all materials, luminaire support, luminaire, driver, mounting bracket, and conduit, and all labor, tools, equipment, and all incidentals required to finish the work, complete in place and accepted by the Engineer.

The accepted quantities of Item Code T07.9902 Furnish and Install Tunnel Luminaire - 210W (Type L2) will be paid for at the contract unit price per each as listed in the Proposal. The price constitutes full and complete compensation for all materials, luminaire support, luminaire, driver, mounting bracket, and conduit, and all labor, tools, equipment, and all incidentals required to finish the work, complete in place and accepted by the Engineer.

The accepted quantities of Item Code T07.9903 Furnish and Install Tunnel Luminaire - 140W (Type L3) will be paid for at the contract unit price per each as listed in the Proposal. The price constitutes full and complete compensation for all materials, luminaire support, luminaire, driver, mounting bracket, and conduit, and all labor, tools, equipment, and all incidentals required to finish the work, complete in place and accepted by the Engineer. The accepted quantities of Item Code T07.9911 Furnish Tunnel Luminaire (Spare) - 102W (Type L1 & L4) will be paid for at the contract unit price per each as listed in the Proposal. The price constitutes full and complete

compensation for all materials, including luminaire, driver, and mounting bracket furnished and accepted by the Engineer.

The accepted quantities of Item Code T07.9922 Furnish Tunnel Luminaire (Spare) - 210W (Type L2) will be paid for at the contract unit price per each as listed in the Proposal. The price constitutes full and complete compensation for all materials, including luminaire, driver, and mounting bracket furnished and accepted by the Engineer.

The accepted quantities of Item Code T07.9933 Furnish Tunnel Luminaire (Spare) - 140W (Type L3) will be paid for at the contract unit price per each as listed in the Proposal. The price constitutes full and complete compensation for all materials, including luminaire, driver, and mounting bracket furnished and accepted by the Engineer.

CODE T07.9904
FURNISH AND INSTALL ELECTRICAL ROOM LUMINAIRE

DESCRIPTION. This work consists of furnishing and installing fully functional LED luminaires and associated mounting materials in the electrical room, all in accordance with these Specifications.

MATERIALS. Tunnel luminaires and tunnel lighting controls shall conform to Subsection M.15.05, of these Specifications and the following:

General:

The luminaire shall consist of the following elements:

1. The linear LED pendant mounted luminaire housing shall consist of a 48” long by 11-1/2” wide by 4-3/8” tall steel housing and reflector.
2. The luminaire shall have a wire guard to protect LEDs.
3. The LED light engine shall consist of high-brightness white LEDs with an expected life of greater than 50,000 hours at L70. The LED assembly shall deliver 6300 lumens in a Type V medium square optical distribution.
4. The luminaire housing shall contain an integral driver with an input voltage of 120 Volts. The luminaire shall have a power consumption of approximately 52 Watts.
5. The Correlated Color Temperature (CCT) shall be 3500K maximum with a CRI of 70 minimum.
6. The luminaire shall be suitable for suspension mounting on chain to 8’-0” AFF.
7. The luminaire shall have a white polyester powder coat applied after fabrication.
8. The luminaire shall be UL listed for damp locations.
9. The luminaire shall be provided with 90-minute emergency battery backup and self-diagnostic testing.

Submittals:
All submitted information shall employ the terminology, classifications, and methods prescribed in Section 722 Applicable Publications. Shop Drawings shall be submitted in an organized and easy to follow format. Any material that is judged to be hard to read, confusing and/or illegible it will not be reviewed and returned, “revise and resubmit”.

Failure to provide the following information with the submittal will give cause to reject the submission in its entirety and be returned incomplete without supporting comments. Until all submittals have been returned in hard copy form with a status of “Approved” or “Approved as Noted”, no production of any product defined in this section shall be completed. Any production shall be at the Contractors/manufacturers own risk.

1. Product Data: For each luminaire, arranged in the order of lighting unit designation. Include data on features, accessories, finishes, and the following:
    a. Physical description of fixture, including dimensions and verification of indicated parameters. Including descriptive literature and catalogue cuts for, but not limited to, luminaire, LED driver, and surge protection device.
    b. Luminaires’ weight, effective projected area, details of attaching luminaires, accessories, and installation and construction details.
    c. Manufacturer’s recommended replacement parts list.

   d. LED Driver/Power Supply: description, operating characteristics, electrical data, component/capacitor temperature rating and reliability testing report from an independent laboratory including mean-time-between-failure (MTBF).
   e. LEDs and Printed Circuit Board Construction.
   f. LED type, ratings and description including heat dissipation design indicating margin between the maximum rated LED junction temperature and the junction temperature at operating current.
   g. Photometric report illustrating iso-illuminance for the project mounting height, classification type and cutoff characteristic. All photometric files presented shall be prepared and certified by an independent testing laboratory.
   h. Independent laboratory IESNA LM-79, LM-80, and TM-21 Reports.
   i. Luminaire IESNA distribution classification and TM-15 BUG rating.
   j. All components shall be submitted with a list of all standards for which the product conforms with.
   k. Submittals shall include proper Ingress Protection (IP Rating) and UL Listing documentation for all the submitted products.
   l. All Test Reports as specified within this section.
   m. Written Warranty that complies within this section.
2. Shop Drawings: Catalog cuts and manufacturers drawings.
   n. Wiring Diagrams: Power, and control wiring.
   o. Coordination Drawings
   p. Mounting and connection details, drawn to scale, for luminaires with all requirements specified here within.
   q. Weight of the fixture inclusive of the LED Driver and controller.
   r. Mounting and installation details drawn to scale.
3. Operation and Maintenance Data: For luminaires to include in maintenance manuals.

CONSTRUCTION METHODS.

Performance Requirements:

Perform all Work in accordance with the requirements of NFPA 70 and 502, and those authorities having jurisdiction. Verify that other construction work is complete to the extent that Luminaires may be installed. Install Luminaires of the type required in the locations shown and make all final electrical connections. Provide accessories as required to properly install the material defined in this section even though these accessories may not be specifically indicated on the Plans. Provide appropriate support(s) for each luminaire. Luminaires and support elements shall not be mounted on or in contact with ducts or pipes.

Installation:

A. Install rows of luminaires accurately on straight lines unless otherwise indicated on the Plans. Install all necessary hangers, channels, bars, supports, and rods required to align Luminaires.

B. Luminaire Adjustment: Provide labor and materials for final adjustment of all luminaires to the Quality Assurance Manager's or MPA Resident Engineer's satisfaction. Adjustment shall take place immediately before the work is accepted by the Quality Assurance Manager.

C. Cleaning. Follow the cleaning procedures recommended by the luminaire manufacturer. Clean the luminaires during installation, as to render them free of foreign material, substances, or film on the luminaire.

D. Luminaire Operation. Ascertain and make sure that the LED luminaires installed are exactly as specified for each luminaire type with regards to the number of LED and distribution required for the given location. Replace without cost to the project inoperative LED panels, which fail to operate prior to final acceptance of the work.

Operating Tests: Upon completion of the installation, conduct an operating test to demonstrate that the lighting systems and associated equipment operates in properly.

METHOD OF MEASUREMENT.

Item code T07.9904 Furnish and Install Electrical Room Luminaire will be measured by the actual number of each actually installed in accordance with the Plans and/or as directed by the Engineer.

BASIS OF PAYMENT.

The accepted quantities of Item code T07.9904 Furnish and Install Electrical Room Luminaire will be paid for at the contract unit price per each as listed in the Proposal. The price constitutes full and complete compensation for all materials, luminaire support, luminaire, driver, and conduit, and all labor, tools, equipment and all incidentals required to finish the work, complete in place and accepted by the Engineer.

CODE T07.9905
TUNNEL LIGHTING CONTROL SYSTEM

DESCRIPTION

The Work specified in this Section consists of furnishing, installing, commissioning, and testing of the Tunnel Roadway Lighting Control System with all assemblies, devices, controllers, power supplies and apparatuses necessary to provide a fully functioning control scheme as detailed in this section. All components will be complete with all items required to make the lighting control components defined in this section operable in accordance with the intent of these contract documents.

GENERAL REQUIREMENTS

A. The Contractor and their subcontractors and suppliers are responsible for using the correct engineering judgment when interpreting this contract package. At a minimum, all items defined in the Contract Drawings are to be included.

B. The Special Provisions are to be the governing reference and are subject to the Engineer's interpretation. Drawings included are for illustration and to show maximum allowable dimensions and layouts and intent. Field conditions may impact locations and distances of equipment.

C. Locations of control equipment are shown diagrammatically on the Contract Drawings. Contractor shall field verify exact locations and sizes. The Contractor shall notify the Engineer about field conditions at variance with plans before installation of any devices or equipment.

D. The tunnel lighting control system shall be a narrowband power line based two-way communication Power-Line Carrier (PLC) system as manufactured by NYX Hemera Technologies (TLACS-U) between the LED luminaires (as defined in Items T07.991, T07.992, and T07.993) and controllers connected to the dedicated lighting electrical panels as defined here within. A Luminaire Control Module (LCM) shall be integral to the luminaire, installed at the luminaire manufacturer's factory and then shipped complete to the project site. The LCM shall be capable of two-way communication to a Lighting Control Server(s) (LCS) that allows access, control, and monitoring of the lighting system. The LCS shall connect to an IP-based application and able to support control and asset management of all the connected devices. The luminaires shall be controlled in groups to dynamically dim supplemental daytime lighting via a signal from a dedicated luminance (L20) camera(s) and to dim other groups of luminaires between nighttime and daytime luminance levels as defined by the Contract Documents.

E. The luminaires shall be commissioned to make groups based on the assigned control group number as listed in the Contract Drawings. There shall be 2 Control Groups (CG):

CG1 Night Level

CG2 Day Level

F. The media access control (MAC) address of each control module integrated in the tunnel fixture shall be recorded using the tables provided in the Contract Drawings. This unique identifier shall correspond to the Control Group assignment and Luminaire number. The luminaire number shall be on the label mounted on the exterior of the fixture.

G. Capabilities of the powerline control system shall include but not limited to the following:

a) On-Off control
b) Dimming control
c) Minimum 12 lighting stages for dynamic dimming
d) Constant lumen output or LED Depreciation Dimming
e) Self-commissioning
f) Lighting override modes
g) Remote accessible via cellular modem

APPLICABLE PUBLICATIONS

A. The publications listed below form a part of these special provisions to the extent referenced. The publications are referenced in the text by basic designation only.

B. Materials and workmanship shall be in accordance with the following standards and codes to the extent specified herein. Unless otherwise indicated, the issuance or date of applicable standards and codes at the time the request for proposal is issued shall govern.

1. American Architectural Manufacturers Association (AAMA) Publications Superior Performing Organic Coatings on Aluminum Extrusions and Panels

2. American National Standards Institute (ANSI) Publications

   C2 National Electrical Safety Code

   C37 Seismic Testing of Relays

   C78.377 Specifications for the Chromaticity of Solid-State Lighting Products

   C82.SSL-1 Operational Characteristics and Electrical Safety of SSL Power Supplies and Drivers C83.77 Harmonic Emission Limits – Related Power Quality Requirements for Lighting

   C136.2 Roadway and Area Lighting Equipment-Luminaire Voltage Classifications

   C136-22 Standard for Roadway Lighting, Internal Labeling of Luminaires

   C136-31 Standard for Roadway Lighting Equipment Luminaire Vibration

3. ASTM International, Inc. (ASTM) Publications:

   B117 Standard Practice for Operating Salt Spray (Fog) Apparatus

   D522 Standard Test Methods for Mandrel Bend Test of Attached Organic Coatings

   D714 Standard Test Method for Evaluating Degree of Blistering of Paints

   D1654 Standard Test Method for Evaluation of Painted or Coated Specimens Subjected to Corrosive Environments

   D3359 Standard Test Methods for Measuring Adhesion by Tape Test

G7-05 Standard Practice for Atmospheric Environmental Exposure Testing of Nonmetallic Materials: Testing for UV resistance

4. Federal Communications Commission (FCC): FCC 47 CFR Part 15, Subpart B

5. International Electrotechnical Commission (IEC):

IEC 60529 Degrees of Protection provided by Enclosures (IP Code)

IES 61000 EMC Electromagnetic Compatibility

6. Institute for Electrical and Electronic Engineers (IEEE) Publications:

National Electrical Safety Code

7. Illuminating Engineering Society of North America (IESNA) Publications:

HB-10 Lighting Handbook

RP-8 Recommended Practice: Lighting Roadway and Parking Facilities

RP-16 Nomenclature and Definition

LM-63 Standard File Format for Electronic Transfer of Photometric Data

LM-69 Approved Guide for the Interpretation of Roadway Luminaire Photometric Reports

LM-71 Photometric Measurements of Tunnel Lighting Installations

LM-79 Electrical and Photometric Measurements of Solid-State Lighting Products

LM-80 Luminous Flux and Color Maintenance of LED Packages, Arrays and Modules

LM-82 Approved Method for Characterization of LED Light Engines and LED Lamps for Electrical and Photometric Properties as a Function of Temperature

TM-15 Lighting Classification for Outdoor Luminaires

TM-15 Addendum BUG Ratings Addendum

TM-21 Projecting Long Term Lumen Maintenance of LED Light Sources

8. National Fire Protection Association (NFPA) Publication:

70 National Electrical Code

502 Standards for Road Tunnels, Bridges, and Other Limited Access Highways

9. National Electrical Manufacturers Association (NEMA):

250 Enclosures for Electrical Equipment

10. Underwriters Laboratories Inc. (UL) Publications:

467 Grounding and Bonding Equipment

508A Industrial Control Equipment

1598 Luminaires

8750 Light-Emitting Diode (LED) Equipment for Use in Lighting Products

11. Military Specification:

MIL-A-8625F Anodic Coatings for Aluminum and Aluminum Alloys.

SUBMITTALS

A. Submittals shall consist of a package received in hard copy (unless otherwise noted) that incorporates the necessary information illustrating compliance with this special provision. All submitted information shall employ the terminology, classifications, and methods prescribed in the above Applicable Publications. Shop Drawings shall be submitted in an organized and easy to follow format. Any material that is judged to be hard to read, confusing and/or illegible it will not be reviewed and returned, revise and resubmit.

B. Failure to provide the following information with the submittal will give cause to reject the submission in its entirety and be returned incomplete without supporting comments. Until all submittals have been returned in hard copy form with a status of “Approved” or “Approved as Noted”, no production of any product defined in this section shall be completed. Any production shall be at the manufacturers own risk.

C. Shop Drawings: For each tunnel lighting control component. Include data on features, accessories, finishes, and the following:

1. Manufacturer’s Catalog Information: appropriately annotated and organized by type designation.

All features being provided by the manufacturer shall be clearly denoted on the cut sheet along with a complete catalog number. Equipment list, system description, electrical wiring diagrams for installation, and manufacturer's data sheets on each product to be used, including:

2. Preparation instructions and recommendations.

3. Storage and handling requirements and recommendations.

4. Installation methods.

5. Drawings: Complete fabrication and assembly drawings. Submit shop drawings showing layout, profiles, and product components, including anchorage, edge conditions, and accessories.

6. Operation, installation, and maintenance manuals including wiring diagrams.

7. Component connectivity details with labeling and device addressing.

8. Risers, enclosures, layouts, and special wiring diagrams showing any changes to contract drawings

9. Bill of materials and components. Bill of materials will list all materials and components that make up a completed lighting control system. Quantities will be given for every item listed.

10. Complete mounting diagrams, with suggested mounting procedures. Manufacturer's data shall be submitted for the mounting channels, hardware, anchors, and brackets proposed to mount the NEMA enclosures as shown on the Plans.

11. Component Data: Manufacturer's data shall be submitted for the individual components for the entire completed tunneling lighting control system, this includes but not limited to the LCM, LCS, transformers, cabling, switches, firewall, patch panels, software(s), applications, electrical enclosures, and computers.

12. Warranty Compliance: The manufacturer will provide documentation in written form as part of the submittal process the willingness to comply with the Warranty section defined below.

13. UL Listing: Manufacture will provide documentation (on UL letterhead) that the LCM and LCS being submitted meet the UL Listing requirements stated throughout this specification section.

14. Test Data: Standard vendor factory test forms and quality assurance documentation. Reports indicating successful passing of standard factory and quality assurance tests. Standard installation and start up tests as recommended by the manufacturer of the equipment provided.

15. Quality Assurance: Manufacturer shall provide documentation of quality assurance procedures and allow the Quality Assurance Manager to audit that quality procedures are being followed.

16. Operation and Maintenance Data: Manufacturer shall provide documentation of recommended operation and maintenance for luminaires to include in maintenance manuals.

WARRANTY

A. Contractor Warranty: The Contractor shall warranty the complete roadway lighting system, including its components and installation. The roadway lighting system shall be warranted to be free of defects in material and workmanship for a period of two (2) years from the date of substantial completion.

B. Manufacturer Warranty: Manufacturer's warranty shall agree to repair or replace any component that fail in finish, materials, workmanship, functionality within five (5) years, including but not limited to the following:

1. The 5-year Warranty shall begin 90 days after shipment, this shall be stated in the warranty language.

2. The manufacturer is to provide a statement to the Quality Assurance Manager that installation of their equipment meets their installation guidelines.

3. Claims against the warranty will be valid regardless of who performs the installation. The manufacturer will be allowed to inspect, at no cost to the project, with the Quality Assurance Manager, the initial installation of the product and after the time a repair has been made. The manufacturer has the right to waive these inspections prior to the final issuance of the warranty specified.

4. The tunnel lighting control system warranty shall cover the following:

    a. Failure of factory assembled hardware units;

    b. Failure of software functioning;

    c. Software and firmware updates within the warranty period;

    d. Contractor's and Control System Programmer's labor to replace failed components and/or reprogramming software firmware.

    e. Traffic control required for Contractor to replace and reprogram failed components.

5. The tunnel lighting control system manufacturer shall provide limited, targeted telephonic and/or internet support to address issues related to product installation on an as available basis from the date of first installation for six (6) months. This shall be provided in writing at the time of submittal along with the warranty information.

REQUIRED LIGHT LEVELS

The tunnel lighting control system shall use the measured values with the thresholds and delays to determine the required lighting levels. The output percentage shall be adjusted for the Light Lumen Depreciation (LLD) of 0.7. This value shall increase to achieve a constant light output (CLO) for the life of the system. The system shall have a minimum of 12 levels, these levels shall be easily adjusted on an as needed basis. The following list below is an example, note the actual table shall be set during the manufacturers commissioning process.

1. All off, testing purposes only.

2. Night, All daytime fixtures off with night fixtures dimmed to desired levels.

3. Dusk, All fixtures on dimmed 10%

4. Day 01, All fixtures on dimmed 20%

5. Day 02, All fixtures on dimmed 30%

6. Day 03, All fixtures on dimmed 40%

7. Day 04, All fixtures on dimmed 50%

8. Day 05, All fixtures on dimmed 60%

9. Day 06, All fixtures on dimmed 70%

10. Day 07, All fixtures on dimmed 80%

11. Day 08, All fixtures on dimmed 90%

12. Day 09, All fixtures on dimmed 100% (no dimming)

OPERATION AND MAINTENANCE DATA

A. For tunnel lighting control system and components to include in emergency, operation, and maintenance manuals. The following shall be included at a minimum:

1. Manufacturer's written instructions for testing and adjusting controls for luminaires.

2. Operating instructions, maintenance manuals and drawings presenting full details for care and maintenance of each item of equipment furnished and/or installed.

3. Wiring and connection diagrams of all components of lighting control system drawings which shall be up to date at the completion of start-up and system acceptance.

4. A record of all MAC addresses of the LCM for each luminaire shall be provided by the tunnel lighting control commission contractor(s). At the time of recording the MAC address of each LCM, the luminaire label shall be applied to both the exterior door and interior housing as shown on the label detail in the contract drawings. The information for each MAC address and associated luminaire shall be provided in format of the following table in both the O&M manual and an Excel electronic file (The first line is for example only):

LUMINAIRE NO.

LUMINAIRE

TYPE ZONE

PANEL

NO. CIRCUIT

CONTROL GROUP NO.

MAC ADDRESS

N001 TL1 TH1 XXX 1 G1 ######

SPARE PARTS AND DATA

As soon as practicable after acceptance of materials and equipment, furnish to the Engineer spare parts data for each different items of equipment listed in Bill of Material list. The data shall include a complete list of parts and supplies, with current unit prices and source of supply. The foregoing shall not relieve the Contractor of any responsibilities under the Warranty. The Contractor shall be responsible for providing a quantity of spares equaling a minimum of 10 percent for each the LCM and LCS's. The Manufacturer shall provide assurances to the engineer that spare parts will be available for a minimum of 10 years.

HANDLING AND DELIVERY

Ship all control equipment, components and accessories securely packaged and labeled for safe handling in shipment and to avoid damage or distortion. Store equipment, control components, and accessories in a secure, dry facility and in original packaging in a manner to prevent soiling, physical damage, wetting, or corrosion prior to installation. Provide for storage inspection by the Quality Assurance Manager after luminaires, electrical equipment, and accessories have been delivered. This inspection is at no additional cost to the project. All cartons shall be clearly marked with the proper identification of manufacturer, catalogue number, designation, and proper storage/handling instructions.

TRAINING MATERIALS

All required training materials specific to the maintenance and operations of the proposed tunnel lighting control system. The training materials shall be specific to the project and include all the project specific terminology. Including but not limited to overrides, alters, dimming levels, schedules, luminance meter optimizations, etc.

MATERIALS

GENERAL

All materials, equipment, and devices shall, as a minimum, meet the requirements of UL where UL standards are established for those items, and the requirements of NFPA 70. All equipment and materials provided shall be new and bear the Underwriters' Label appropriate to location and use as shown on the Contract Drawings.

REQUIREMENTS:

A. Mark devices clearly with manufacturer's name and catalog number and label for intended use (wet location, outdoor use, etc.).

B. Thicknesses, gauges, and tempers of products shall be as specified.

C. All stainless steel shall be Type 316 conforming to ASTM A240 / A240M or ASTM A480 / A480M (as required), unless otherwise noted herein or on the contract drawings.

D. Screws used in the luminaire assembly may either be stainless steel type 316 or 410 with a zinc plated (ZinKlad, or similar).

TUNNEL LIGHTING CONTROL COMPONENTS:

Manufacturer is responsible for all compatibility testing between components.

A. Luminance Sensor L20 Camera/Meter (LCAM): A L20 luminance meter detects the amount of light in Candelas per square meter (cd/m2) at the portal of the tunnel and sends a 4-20mA signal proportional to the measured light to a tunnel lighting controller (LCC). One LCAM for Eastbound and one LCAM for Westbound.

1. The luminance meter shall contain an eye-corrected silicon cell/diode to measure the luminance in a 20-degree conical field, from 0 to 10,000 cd/m2 with a resolution of 2 cd/m2 as recommended by CIE 088:2044 and IES RP-8.

2. Meter accuracy shall be a maximum of 3%.

3. Meter shall be capable of internal diagnostics to the LCC.

4. The housing for the luminance meter is to be 316 Stainless Steel. The housing shall be IP 66 rated. The lens shall be tempered glass.

5. The mounting bracket shall be 316 Stainless Steel, which shall allow for the aiming of the luminance meter to achieve the orientation shown on the Contract Drawings.

6. All exterior hardware shall be stainless steel. Access door shall be fastened by means of a continuous hinge, with a one-piece, compressible neoprene gasket.

7. Surge protection shall be provided at the voltage inputs of the luminance meter and controller. Circuit breakers shall isolate control circuits from the luminance meters.

8. The meter shall be able to compensate for distance that is not equal to the actual Safe Stopping Distance (SSD).

9. Meter shall be capable of allowing the control system to view or send photos of its view, allowing for proper alignment and checking if the meter is moved or misaligned.

10. Luminance meter housing shall include a ¾ inch NTP fitting for connection of conduit and 5-wire conductors for power and communications.

11. The meter shall be suitable for outdoor use and being exposed to weather with a temperature range of -40 to 60 degrees Celsius, -40 to 140 degrees Fahrenheit.

12. The meter shall be mounted in accordance with the Contract Drawings and manufacturer requirements.

13. The luminance meter shall be wired to a field mounted NEMA 4X junction box with a 4-20mA to Ethernet converter and a fiber optic media converter.

B. Luminaire (Local) Product Controller (LPC): This item is paid for under T07.9901, T07.9902, and T07.9903 Tunnel Lighting. The LCM shall be an ISO compliant, power line communications technology to manage tunnel lighting luminaires. The LCM shall be installed integral to the tunnel lighting luminaires at the lighting manufacturer's factory. The lighting luminaire and LCM together shall be considered as one unit and meet required UL listing. The Contractor shall coordinate the procedures and responsibilities of the lighting and controls manufacturers. The Contractor shall allow ample lead times for such operation and note that the lighting manufacturers will have additional testing and UL listing to obtain. The cost of delivering and installing LCM into Tunnel Luminaires to be considered incidental to and included in the contract lump sum for the lighting control system.

1. Feature requirements: ISO/IEC 14908-1 and -3 compliant, power-line-based, two-way Communications between LED light source and LCS.

    a. Optimizes communications with integrated power line meshing.

    b. Enables remote command and control at every fixture.

    c. Automatic pushing of Firmware updates.

    d. Outdoor Lighting Controller shall be capable to control various Light Emitting Diode (LED) Lighting and compatible with industry standard electronic 0-10v diming drivers. Using the Analog Control Protocol modulation (PWM) compliant with IEC60929 standards.

2. The LCM shall provide data to the LCS including but not limited to the following: LED light source run hours, voltage, current, lamp status, power consumption, diagnostic alarms, and power factor. The LCM shall be 75 to 86 kHz range (A-Band), approximately 6.5 inches x 3 inches x 1.5 inches, weight shall be approximately 1 pound. Electrical operation shall be 100- 277 VAC 2 wire and ground, frequency 47 to 63 Hz with a max 5 amps. Temperature range -40 to 70 degrees Celsius, -40 to 158 degrees Fahrenheit.

    a. Minimum connection requirements include: Network Interface, I/O Power Line Communications Dual frequency 115 kbps and 132 kbps. Two-way communications on the Power line channel based on the ISO/IEC 14908-3 standard.

    b. Power Line Repeating: Shall be able to repeat messages within the outdoor lighting network, as requested by the LCS.

1. If Power Line communications fail between the LCS and the LCM, the LCS shall be able to dynamically specify another lighting controller to act as a repeater to maintain overall network communications.

2. Dimming capability using PWM and 0-10V Power Filtered auxiliary power output maximum 500-Watt luminaires.

3. Switched internal relay for turning lights on/off as required.

4. Greater than 48 dB attenuation for lighting noise sources (built-in filter).

Lighting Control Cabinet (LCC): The LCC is a control cabinet specially designed for tunnel lighting controls. The LCC shall be configured as designated on the Contract Drawings to control the identified fixtures for daytime dynamic dimming, nighttime configuration, and emergency lighting operation. The LCC shall be the point of contact to the Luminance Sensor/Meter. The LCC shall have any required network controllers, MODBUS TCP/IP, and data loggers. Additional features shall include:

1. The daytime tunnel lighting shall be controlled via the Luminance Sensor/Meter located outside the tunnel portals. One L20 per tunnel portal.

2. Web based HMI interface for installation and configuration.

   a. Each tunnel shall have its own detailed view with navigation between different details and other views.

   b. The layouts shall show the position of each light fixture within each zone as identified on the contract drawings.

   c. Each fixture shall also show the ID upon selecting it.

   d. Fixtures shall be color coordinated to each state with a key for identification.

3. RS-485, Fiber optic, and 10/100 Mbit/s ethernet interfaces shall be included.

4. Integrated self-diagnosis and failure detection.

5. Enclosure shall be stainless steel. The size of the enclosure shall be submitted as part of the shop drawing submittals and be sized to suit the needs of the completed tunnel lighting control operations. Minimum size shall be 16 inches W x 8 inches D x 20 inches L.

6. 208-480 VAC, 50/60 Hz

7. Operating temperature shall be -20°C to 40°C.

8. UL 508A, FCC 47 CFR Part 15/Subpart B, Class A level, ICES-003 Issue 6 January 2016, EN 55024:2010, EN 61000

D. Ethernet Cable: Ethernet Cat 5e cable shall be 24 AWG Bonded-Pairs solid bare copper conductors, polyolefin insulation, sunlight - resistant LSZH jacket, rip cord with sequential marking at two-foot intervals. Ethernet Cable shall be Belden 7935A Multi-Conductor - Category 5e Low Smoke Zero Halogen or approved equal. The Ethernet Cat 5e cable shall at a minimum have the following features:

   Conductor: 4 Pairs, 24 AWG, Solid, Bare Copper, .02 diameter

   Insulation: Polyolefin, .009-inch wall thickness, .035-inch diameter

   Outer Shield: Unshielded

   Outer Jacket: Low Smoke Zero Halogen

   Overall Cable diameter of .23 inches

-10 to 75 C (14 to 167 Fahrenheit)

19 lbs. / 1000 feet, max pulling tension 40 lbs., min bending radius .25 inches
UL 1581 Vertical Tray, UL 1685 Vertical Tray Flame Test

CSA FT1 Flame Test

15 pF/foot

9. Cellular modem shall be provided with the tunnel lighting control system, monthly cellular charges to be paid by the owner.

MOUNTING HARDWARE AND MISCELLANEOUS EQUIPMENT

A. Work shall include all miscellaneous basic material and software, either explicitly called for or implied to provide a fully functional Tunnel Lighting Control system as defined in these documents.

B. Provide channels, clips, brackets, straps, shields, DIN rails and/or miscellaneous hardware suitable for the mounting method specified on the contract drawings and within this specification. All mounting hardware shall be Type 316 stainless steel unless otherwise noted.

C. All nuts shall have captive externally footed lock washers.

D. Furnish materials and equipment bearing label or classification listing of a national recognized testing laboratory where UL standards exist, and such product labeling or listing is available. Electrical materials shall comply with the NEC. No exceptions.

E. Provide products that are free from defect that may impair performance, durability, life, and appearance. Products shall be of the commercial quality best suited for the purpose of harsh, dirty, and extreme environments.

F. Neoprene pads, isolation washers or gaskets shall be used to separate any dissimilar metals subjected to corrosion by galvanic action. This includes any and all locations where the SS hardware may come into contact with the aluminum fixture housing, SS hardware may come into contact with galvanized steel, SS may come into contact with concrete, or galvanized steel may come into contact with concrete. All adjustable overlaps and joints shall be gasketed with 3/16-inch, 40 durometer neoprene gaskets as approved by the Engineer.

G. All outdoor enclosures shall be minimum NEMA 4X and enclosures with all necessary heat and cooling necessary as recommended by the manufacturer of the control system. All enclosures shall be fully hinged doors and installed so that the door is free to fully open with any obstructions and so that personal can easily access the contents of the enclosure. All enclosures shall be provided with lock and key. All enclosure shall have grounding terminals of either green colored washer-in-head machine screw not smaller than No. 10-32 in a drilled, tapped, and threaded hole in the back of the enclosure or a grounding bushing with green colored machine screw terminal attached to one of the conduits. All enclosures shall also be provided with service power outlets.

H. All enclosure housings shall be free standing NEMA 4X cabinets sized for 100% expansion capability. The cabinet shall provide protection against water, dirt, corrosive agents, and other contaminants. Cabinet shall be provided with window door, made of scratch resistant safety glass providing visual monitoring of internal equipment. The cabinet shall be Hoffman or equivalent.

I. Provide all required connectors and fiber optic/copper patch cables to provide a fully functioning control system. Patch cables shall be factory made with the appropriate connectors and manufacturer acceptable dB loss.

J. Provide all fiber splicing at the fiber patch panel and at locations connecting to the existing fibers (as required). All fiber splicing locations shall be indicated on the as-built drawings. Fiber splicing shall be kept to a minimum and only be permitted at pull-box locations or enclosures (approximate 0.01 dB per splice).

K. Provide cable management solutions within the communication enclosures to manage the cables.

L. Provide power supplies per manufacturer requirements to power equipment provided.

CONSTRUCTION METHODS.

GENERAL

A. Perform all Work in accordance with the requirements of NFPA 70 and 502, and those authorities having jurisdiction. Verify that other construction work is complete to the extent that the control system may be installed. Provide accessories as required to properly install the material defined in this section even though these accessories may not be specifically indicated on the Plans.

B. A factory authorized technician shall be available to provide aid in proper setup of the PLC system, network interface into existing Authority LAN, and setup of the control software. This includes but not limited to sensor calibration, software installation, setup, hardware adjustments, software adjustments, programing, and commissioning.

DELIVERY, HANDLING, AND STORAGE

A. Ship all equipment, components and accessories securely packaged and labeled for safe handling in shipment and to avoid damage or distortion. Store all control components, wireways and accessories in a secure dry facility and in original packaging in a manner to prevent soiling, physical damage, wetting, or corrosion prior to installation. Provide for storage inspection by the Quality Assurance Manager after control system, electrical equipment, and accessories have been delivered. This inspection is at no additional cost to the project. All cartons shall be clearly marked with the proper identification of manufacturer, catalogue number, and proper storage/handling instructions.

B. Blemished, damaged, or unsatisfactory equipment caused by manufacturing errors, shipping, storage, or installation shall be replaced in a satisfactory manner at no cost to the Authority. This applies to products not yet installed as well as product that has already been installed.

JOB SITE CONDITIONS

A. Protect exposed parts of equipment during installation until construction, painting, and general clean-up in the area has been completed.

B. Inspect surfaces and structures to, and on, which products shall be installed before the Work of this Section begins and ensure that they are capable of supporting the products. Surfaces which shall be concealed by products shall be finished before products are installed.

INSTALLATION OF CONTROL SYSTEM

A. Unpack and check equipment for visible damage from shipment. Damaged equipment shall not be installed, and a replacement must be supplied at no cost to the project.

B. Install the components as indicated and in accordance with manufacturer's guidelines and recommendations.

C. Install equipment accurately and on straight lines unless otherwise indicated on the Plans. Install all necessary hangers, channels, bars, supports, and rods required for proper alignments. Cable management shall be neat, orderly, and well organized.

D. Avoid interference with, and provide clearance for, the equipment. Where the indicated locations conflict with the locations for other equipment, change the locations by the minimum distances necessary and as approved by the Engineer.

E. Luminance Meter Adjustment: Provide labor and materials for final adjustment of luminance meters to the Quality Assurance Manager's satisfaction. Adjustment shall take place immediately before the work is accepted by the Quality Assurance Manager.

F. Identification: The contractor shall identify field installed conductors, interconnecting wiring and components on the power side of the control system as well as the network side. Nameplates shall be provided for all components.

1. Manufacturer's Nameplates: Nameplates on manufactured items shall be aluminum or Type 304 stainless steel sheet, no less than 20 USG, riveted or bolted to the manufacturer's equipment. The nameplate data shall be engraved or punched for a non-erasable record of the equipment data.

2. Field Installation: Field-installed nameplates shall be engraved melamine plastic laminate, 1/8" thick, engraved in block capital lettering to expose white lettering on black face. Screw or bolt to equipment. Adhesive attachment of nameplates is not permitted. Plastic nameplates are not permitted on equipment mounted in the tunnel.

3. Smaller labels, 20 square inches or less may be 1/16" thick. Secure labels with rivets, stainless steel screws, stainless steel straps, or stainless-steel supporting angles.

4. Approval: Submit a schedule of nameplates, abbreviations, and equipment designations for approval. LCMs shall be labeled with the address.

5. Lettering: Lettering shall comply with ANSI A13.1 for size and style.

FIELD QUALITY CONTROL AND TESTING

A. Upon completion of the installation, conduct an operating test to demonstrate that the lighting systems and associated equipment operates in accordance with the performance requirements of the Tunnel Lighting Control System. The following tests shall be successfully performed, and the results submitted to the Quality Assurance Manager prior to project acceptance:

1. Verification of Tunnel Lighting levels in Accordance with LM-71-14.

2. Verification that Tunnel Lighting Levels are maintained through the control sequence outlined in this section, at the dimming levels, and within the time delays set.

3. Operator Interface Panel Test to ensure that manual control of the tunnel lighting system operates per manufacturer's requirements.

4. System shall be successfully operated by the Contractor for a minimum of 10 days without interruption or failure of the tunnel lighting system. Any failures to be repaired immediately, and 10-day test shall start over.

5. Acceptance Testing Preparation:

   Obtain manufacturer's operating instructions.

   Test insulation resistance for each component and control circuit.

   Test continuity of each circuit.

6. Tests and Inspections: Perform each visual and mechanical inspection and electrical test stated in NETA Acceptance Testing Specification. Certify compliance with test parameters.

7. Operate each control and visually verify the control operates as indicated in the plans and specifications.

8. Correct malfunctioning units on-site, where possible, and retest to demonstrate compliance; otherwise, replace with new units and retest.

9. The contractor and testing agency shall prepare test and inspection reports, including a certified report that identifies components and panels included and that describes results. Include notation of deficiencies detected, remedial action taken and observations after remedial action.

10. The Ethernet cable manufacturer shall perform copper pair tests on all Ethernet cable pairs, by cable reel that are provided under this Contract. Provide the manufacturer Ethernet cable test results for each cable reel to the Quality Assurance Manager at the time when the cable reel is delivered to the site. Each Ethernet cable pair of every Ethernet cable installed shall be tested end-to-end after all splices and terminations have been completed Perform all Ethernet cable tests as described and listed in ANSI/NETA ATS-2009, 7.3.2 Ethernet Cables. Notify the Quality Assurance Manager prior to starting any cable strand testing. Provide to the Quality Assurance Manager all cable strand tests results. Any Ethernet cable having pairs that do not PASS the tests shall be replaced and retested at no additional cost to the project.

INSPECTIONS

Inspect tunnel lighting control system hardware for material defects, improper closures, and damage that may have occurred during installation. Report and replace damaged equipment.

A. Inspect cables for physical damage and proper connection.

B. For Warranty Purposes, the manufacturer, or their representative has the right to perform periodic reviews of the installation to ensure that the supplied products have been installed in accordance to their installation guidelines. Deviations from the installation guidelines shall be reported to the Quality Assurance Manager.

TRAINING

A. After the system testing has been completed, and equipment has been fully checking for proper operation, designated Authority personnel shall be instructed in the operation, adjustment and maintenance of all equipment, software, and systems.

1. Training shall consist of formal in-person educational sessions wherein all procedures necessary to operation, modify, and maintain the equipment and software systems on a continuing basis are explained in full detail. Hands-on operations and maintenance tasks shall be executed to ensure that all aspects of the training are fully understood.

2. The contents of the Operations and Maintenance Manual (O&M Manual) shall be reviewed in full detail to clarify all aspects of the manual and the operation and maintenance of all equipment and systems.

3. The text of the approved operating instructions for the system and equipment in question shall be reviewed during the training session.

4. The training shall be provided for the tunnel lighting control system for the minimum of one (1) - eight (8) hour sessions (8 hours/day) and accommodate a minimum of 5 people.

5. Training shall be performed on or near the work site and shall be attended by the manufacturer’s representative.

6. All manuals shall be delivered to the Authority in both electronic (.PDF) format and hard copy format. Hardcopies shall be printed and bound with appropriate tabs, title page, table of contents, and glossary.

7. Training shall be performed within three (3) months of substantial completion of the first completed bore. The instructors shall be available for consultation, at no additional cost to the Authority, for a period of three months after the Authority has assumed full operation of all the equipment and systems and all bores are fully operational.

8. The training session shall be provided by the lighting control manufacturer to all required staff. The training shall include, but not limited to:

   a. Sequence of operation

   b. Component identification

   c. Configuration and Calibration

   d. Operator interface terminal menus

   e. Communication

   f. Maintenance

   g. Administration and troubleshooting

OPERATION

Tunnel shall not be open to traffic until the Tunnel Lighting Control System and subsequent tunnel lighting system are fully operational for all daytime and nighttime conditions.

BASIS OF MEASUREMENT.

Item code T07.9905 Tunnel Lighting Control System shall be measured by lump sum inclusive of all the control system components in order to make complete and functional system as described here within.

BASIS OF PAYMENT

Payment for Item code T07.9905 Tunnel Lighting Control System shall be made at the Contract Unit Price, Lump Sum, which price shall include all materials, equipment, labor, test, commissioning, and incidentals required to furnish and install the control system as shown on the Contract Drawings, and as specified herein.

CODE T07.9906

TUNNEL LIGHTING SERVICE CONTRACT

DESCRIPTION. This work consists of furnishing a tunnel lighting service contract to maintain the tunnel lighting system. Work shall consist of a monthly survey of the entire lighting system, replacing drivers, fuses, and surge devices when required and/or replacing installed luminaire with spare lighting fixtures.

MATERIALS.

Warranty: Luminaires are covered under manufacturer's warranty for 10 years.

Monthly Survey: A survey of the entire lighting system shall be conducted every month for the length of the 10-year contract. System outage and repair needs will be identified and documented. Contractor shall provide monthly report itemizing the luminaire number, location, problem, and solution.

Maintenance: Contractor shall coordinate with the luminaire manufacturer to replace or repair any luminaires found not operational during monthly survey.

METHOD OF MEASUREMENT.

Item code T07.9906 Tunnel Lighting Service Contract will be measured by lump sum inclusive of all labor, tools, equipment, and incidentals required to service the tunnel lighting luminaires.

BASIS OF PAYMENT.

Payment for Item code T07.9906 Tunnel Lighting Service Contract hall be made at the Contract Unit Price, Lump Sum, as an allowance which price shall include all materials, equipment, labor, test, commissioning, and incidentals required to provide field service services

CODE T07.9907
FURNISH AND INSTALL BUS SHELTER LUMINAIRE

DESCRIPTION. This work consists of furnishing and installing fully functional LED luminaires and associated mounting materials in the electrical room, all in accordance with these Specifications.

MATERIALS. Pendant luminaires and lighting controls shall conform to Subsection M.15.05, of these Specifications and the following:

General:

The luminaire shall consist of the following elements:

1. The linear LED pendant mounted luminaire housing shall consist of a 48” long by 4-1/2” wide by 3-3/4” tall, extruded aluminum housing.
2. The LED light engine shall consist of high-output white LEDs with an expected life of greater than 60,000 hours at L70. The LED assembly shall deliver 4000 lumens in a Type II medium square optical distribution.
3. The luminaire housing shall contain an integral driver with a universal input voltage of 120-277 Volts AC. The luminaire shall have a power consumption of approximately 7 Watts.
4. The Correlated Color Temperature (CCT) shall be 3500K maximum with a CRI of 70 minimum.
5. The luminaire shall be suitable for suspension mounting on chain to 9’-0” AFF.
6. The luminaire shall have a white polyester powder coat applied after fabrication.
7. The luminaire shall be provided with 90-minute emergency battery backup.

Submittals:
All submitted information shall employ the terminology, classifications, and methods prescribed in Section 722 Applicable Publications. Shop Drawings shall be submitted in an organized and easy to follow format. Any material that is judged to be hard to read, confusing and/or illegible it will not be reviewed and returned, “revise and resubmit”.

Failure to provide the following information with the submittal will give cause to reject the submission in its entirety and be returned incomplete without supporting comments. Until all submittals have been returned in hard copy form with a status of “Approved” or “Approved as Noted”, no production of any product defined in this section shall be completed. Any production shall be at the Contractors/manufacturers own risk.

1. Product Data: For each luminaire, arranged in the order of lighting unit designation. Include data on features, accessories, finishes, and the following:
    a. Physical description of fixture, including dimensions and verification of indicated parameters. Including descriptive literature and catalogue cuts for, but not limited to, luminaire, LED driver, and surge protection device.
    b. Luminaires’ weight, effective projected area, details of attaching luminaires, accessories, and installation and construction details.
    c. Manufacturer’s recommended replacement parts list.

   d. LED Driver/Power Supply: description, operating characteristics, electrical data, component/capacitor temperature rating and reliability testing report from an independent laboratory including mean-time-between-failure (MTBF).
   e. LEDs and Printed Circuit Board Construction.
   f. LED type, ratings and description including heat dissipation design indicating margin between the maximum rated LED junction temperature and the junction temperature at operating current.
   g. Photometric report illustrating iso-illuminance for the project mounting height, classification type and cutoff characteristic. All photometric files presented shall be prepared and certified by an independent testing laboratory.
   h. Independent laboratory IESNA LM-79, LM-80, and TM-21 Reports.
   i. Luminaire IESNA distribution classification and TM-15 BUG rating.
   j. All components shall be submitted with a list of all standards for which the product conforms with.
   k. Submittals shall include proper Ingress Protection (IP Rating), ETL Rating, and UL Listing documentation for all the submitted products.
   l. All Test Reports as specified within this section.
   m. Written Warranty that complies within this section.
2. Shop Drawings: Catalog cuts and manufacturers drawings.
   n. Wiring Diagrams: Power, and control wiring.
   o. Coordination Drawings
   p. Mounting and connection details, drawn to scale, for luminaires with all requirements specified here within.
   q. Weight of the fixture inclusive of the LED Driver and controller.
   r. Mounting and installation details drawn to scale.
3. Operation and Maintenance Data: For luminaires to include in maintenance manuals.

CONSTRUCTION METHODS.

Performance Requirements:

Perform all Work in accordance with the requirements of NFPA 70, and those authorities having jurisdiction. Verify that other construction work is complete to the extent that Luminaires may be installed. Install Luminaires of the type required in the locations shown and make all final electrical connections. Provide accessories as required to properly install the material defined in this section even though these accessories may not be specifically indicated on the Plans. Provide appropriate support(s) for each luminaire. Luminaires and support elements shall not be mounted on or in contact with ducts or pipes.

Installation:

A. Luminaire Adjustment: Provide labor and materials for final adjustment of all luminaires to the Quality Assurance Manager's or MPA Resident Engineer's satisfaction. Adjustment shall take place immediately before the work is accepted by the Quality Assurance Manager.

B. Cleaning. Follow the cleaning procedures recommended by the luminaire manufacturer. Clean the luminaires during installation, as to render them free of foreign material, substances, or film on the luminaire.

C. Luminaire Operation. Ascertain and make sure that the LED luminaires installed are exactly as specified for each luminaire type with regards to the number of LED and distribution required for the given location. Replace without cost to the project inoperative LED panels, which fail to operate prior to final acceptance of the work.

D. Operating Tests: Upon completion of the installation, conduct an operating test to demonstrate that the lighting systems and associated equipment operates in properly.

METHOD OF MEASUREMENT.

Code item T07.9907 Furnish and Install Bus Shelter Luminaire will be measured by the actual number of each actually installed in accordance with the Plans and/or as directed by the Engineer.

BASIS OF PAYMENT.

Code item T07.9907 Furnish and Install Bus Shelter Luminaire shall be paid for at the contract unit price per each as listed in the Proposal. The price constitutes full and complete compensation for all materials, luminaire support, luminaire, driver, and conduit, and all labor, tools, equipment and all incidentals required to finish the work, complete in place and accepted by the Engineer.

CODE T15

DIRECTIONAL, REGULATORY, TACTILE BRAILLE, HOSE VALVE SIGNS

T.15.01 DESCRIPTION. This work consists of furnishing and installing directional, regulatory, and warning signs on wood posts, square tubular steel posts, tubular steel posts, U-channels or traffic signal supports, brick masonry, concrete, and reflective sheeting, all in accordance with these Specifications, at the locations indicated on the Plans and/or as directed by the Engineer. Also included is the removal and relocation of existing directional, regulatory, and warning signs.

T.15.02 MATERIALS. Aluminum sheets, sign posts, reflective sheeting, and hardware shall conform to the applicable requirements of **CODE M.16; SIGNS AND SIGN SUPPORTS**, of these Specifications.

T.15.03 CONSTRUCTION METHODS.

T.15.03.1 Preparation of Aluminum Sheets. Prior to application of reflective sheeting, the aluminum sign sheets shall be treated in strict accordance with the following procedure:

a. The sign panel shall be degreased by total immersion in a saturated vapor of trichloroethylene. Trademark printing shall be removed with lacquer thinner or controlled alkaline cleaning system.

b. Preliminary cleaning shall be followed by a surface etch in a 6-to-8 percent phosphoric acid solution at 100◦F followed by spraying with a cold-water rinse and immersion for one minute in circulating hot water at not less than 180◦F. The surface etch shall provide a clean, non-shine or non-glare finish suitable for the application of sheeting.

c. The sign panel shall be dried by the use of a forced hot air drier.

d. No metal shall be handled, except by device or clean canvas gloves, between all cleaning and etching operations and the application of paint or reflective sheeting. There shall be no opportunity for metal to come in contact with grease, oils or other contaminants after cleaning and etching and prior to the application of paint or reflective sheeting.

T.15.03.2 Sign Face. The design, color, type, size and dimensions of the sign faces shall conform to the Plans and to the applicable requirements of the latest edition and revisions of the "Manual on Uniform Traffic Control Devices. Alphabet designs of upper and lower-case letters and spacing of letters shall conform to the Standard Alphabets for Highway Signs, published by the U.S. Department of Transportation, Federal Highway Administration. In case of signs that are not covered by these Standards, the design shall follow the requirements shown on Contract drawings.

The Engineer reserves the right to make any changes in sign texts prior to sign manufacture at no additional expense to the State. Drawings showing dimensions, sizes, shapes and spacing of letters and arrows for all directional signs shall be submitted to the Engineer within 30 days

following the award of the Contract.

T.15.03.3 Application of Reflective Sheeting and Finish and Coatings.

a. Method. Application of reflective sheeting shall be by the mechanical squeeze roller applicator method in accordance with the recommendations of the manufacturer.

b. Splices. At splices, pressure-sensitive, adhesive-coated sheeting shall be overlapped not less than 3/16-inch. Heat-activated, adhesive-coated sheeting may be spliced with overlap not less than 3/16-inch or butted, gap not to exceed 1/32-inch. Only butt splices shall be permitted on signs screen processed with transparent color. Sheeting applied to extruded sections shall extend over top edges and down side legs a minimum of 1/16-inch.

c. Finish. Reflective sheeting splices and sign edges shall be sealed and signs clear coated with materials supplied and in accordance with the manufacturer's instructions.

d. Anti-Graffiti Coating. All signs to be coated with clear anti-graffiti protective coating.

1. Color: Clear
2. Finish: Gloss only
3. Vehicle Type: Solvent Base
4. VOC: Less than 100 g/L
5. Weight per Gallon: 7.36 lb-gallon
6. Non-breathable
7. Spread Rate: Wet mils .05 - 1.0, Dry mils 0.1 – 0.6
8. Coverage: 600-1200 sq. ft./gal (nonporous surfaces), 200-400 sq. ft./gal (porous surfaces). Coverage will vary depending on the porosity and texture of the application process.

Application: Refer to manufacturer’s instructions.

Test coating to ensure adhesion and performance. Use spray on painted surfaces and signs. Prepare surface. Surface must be clean and dry before application. Remove all oil, dust, grease, dirt and other foreign material. Coat directly over surface with spray method only. Outdoor temperature conditions shall be between 45°F and 105°F with RH 90% or less.

T.15.03.4 Locations. The approximate locations of the signs are shown on the Plans, but exact locations shall be determined in the field by the Engineer. Posts shall be erected plumb. Signs shall be erected to face 2 degrees away from the direction of approaching traffic so that there will be no specular glare from the reflective sheeting.

Steet signs shall be mounted horizontally on the posts in accordance with standard commercial processes as approved by the Engineer.

Side-of-road signs and signs in the tunnel shall be mounted at locations indicated on the Plans. The height of the sign shall be determined in accordance with the Plans; the Manual on Uniform Traffic Control Devices; or as directed by the Engineer.

T.15.03.5 Post Holes. Post holes shall be excavated to the depth and in the position shown on the

Plans, or as indicated by the Engineer. A tolerance of plus or minus 3 inches will be permitted in the depth of the holes for wood posts. The exposed portions of the posts shall be set plumb and true to line and grade, and holes shall be backfilled with sound earth and tamped in 6-inch layers in such a way as not to displace the posts.

Post holes to be excavated through an existing concrete or asphalt surface shall be backfilled with earth as prescribed above to within 4 inches of the original grade. After this is completed, 4 inches of concrete shall be placed in the hole and the surface leveled and finished with the original grade.

When sign posts, except U-channels, are to be installed within areas where new concrete or asphalt pavement is to be placed, the following method shall be used. At the post location, a box form will be installed. The side dimension of the box form shall be 4 inches larger than the greatest dimension of the required post, but no less than 8 inches, and its depth shall be 6 inches. The box form shall be firmly anchored and shall be placed such that the top of the box is at the finished grade of the pavement. The pavement shall be installed around the box form. The required post hole shall then be excavated within the area of the box form, and the post will be installed, with the proper backfilling, as described above. All concrete box forms shall conform to **Subsections 905.03.3(c), (d)** and **(g)** of these Specifications.

T.15.03.6 Remove and Relocate Signs. The sign panels and posts shall be relocated as a complete unit. If any hardware or posts are damaged or faulty, then posts and hardware shall be utilized from the sign assemblies removed and disposed. All costs for the replacement of damaged or faulty hardware and/or posts shall be included in this item of work.

T.15.03.7 Street Signs. Street sign blade dimension, and text sizes, shall be as follows:

a. Height and Letter Sizes. All faces with 6-inch caps and 4-inch suffix copy will trim to a 9-inch height and shall be used for highways with posted speeds of 40 mph or more, unless otherwise noted.

All faces with 4-inch caps and 2-inch suffix copy will trim to a 6-inch height and shall be used for highways with posted speeds of 35 mph or less, unless otherwise noted.

All street signs mounted overhead will have 8-inch caps and 5-inch suffix caps, and will be 18 inches in height, regardless of posted speed.

All suffix copy shall be placed directly to the upper right hand of the street name designation.

b. Length and Letter Series. Pre-screened street name sign faces in 30, 36, 42, and 48-inch lengths for capital legend will be in accordance with the following guidelines:

The majority of pre-screened faces will be 30 inches or 36 inches in length, and the legends shall be "D" series letters unless otherwise authorized by the Engineer.

If legends in the "D" series letter size have a primary copy of 6 inches and are of such lengths as to require faces longer than 36 inches, the "C" series letter size shall be used, and the sign shall be made to the shortest of the allowable sizes (i.e., 36 inches, 42 inches, or 48 inches).

If legends in the "D" series letter size have a primary copy of 4 inches and are of such lengths as to require faces longer than 30 inches, the "C" series or "B" series letter size (the boldest which space allows) shall be used, and the sign shall be made to the shortest of the allowable sizes (i.e., 30 inches, 36 inches or 42 inches).

Overhead mounted sign blades shall have a minimum length of 36 inches and a maximum length of 72 inches. Legend shall be series “D.” Spacing may be reduced by up to 25 percent if the text does not fit on the 72-inch sign blade. If the legend exceeds the 72-inch length with the reduction in spacing, then series “C” text may be used. Lateral spacing from the edge of the sign to the edge of the text shall not be less than 8 inches.

T.15.03.8 Parking Signs.

a. Posts. Posts shall be driven to a depth of 4 feet. The post shall be placed such that the sign is at an angle of not less that 30 degrees nor more than 45 degrees with a line parallel to the flow of traffic. The edge of the sign shall be 18 inches from the face of curb unless space does not permit, in which case the edge of sign shall be 12 inches from the face of curb. At no time will the sign be placed closer than 12 inches to the face of curb.

b. Panel. The sign panel shall be attached to the post using two, 5/16-inch by 2½-inch galvanized bolts with two 0.070 washers per bolt.

T.15.03.9 Signs Mounted on Mast Arms. All signs attached to traffic signal mast arms shall include galvanized steel safety chains.

The mounting bracket used for the overhead street signs will be held in place with stainless steel bands and must be adjustable such that the sign blade is perpendicular to the direction of traffic. The mounting shall hold the sign rigidly in place and resist movement in all directions. Sign blades 60 inches and greater in length shall be held in place with two brackets.

T.15.03.10 Tactile Braille Signs. All ADA-required Tactile/Braille signage as indicated on the Drawings.

a. Permits. Obtain permits as required by Local Authorities for installation of signs.

b. Submittals. Manufacturer’s product data, any limitations and recommendations for each material used, installation instructions, and manufacturer’s certification (stating that materials comply with requirements). Provide dimensioned shop drawings of each individual sign.

c. Quality Assurance. The work shall conform to the codes and standards of the following regulatory Agencies and Authorities as further cited herein:

1. ADA: Americans with Disabilities Act 2010 Standards
2. ANSI: Americans National Standards Institute
3. ASTM: Americans Society for Testing and Materials

d. Performance Requirements:

1. Painted Sign Finish shall comply with the following performance requirements:
    a. Weatherability: When tested in accordance with ASTM G 53, after 500 hours in Weatherometer (equivalent to approximately 3 years exterior exposure).
    b. Gloss retention not less than 88.0 determined in accordance with ASTM D 523 at a 60 degree angle.
    c. Color shall not change more than 1.68 units determined in accordance with STM D 2244 and measured with a Hunter Colorimeter, Model D25.
2. Durability: Sign finish shall not effect after repeated use of cleaners such as Graffiti Remover #1120 manufactured by Organics Corp., Lodi, NJ.

e. Source: For each type of material required for the work of this section, provide Single-Source Responsibility.

f. Accessibility: The ADA Standards and the Rhode Island regulations are pertinent to the design and installation of items covered under the work of this Section. When guidelines conflict, the guideline giving greater access shall be applicable.

e. Qualifications, Coordination & Maintenance: The approved manufacturer shall have a minimum of 5 years of successful experience with similar work and shall have a reputation for doing satisfactory work on time. The work in this Section shall be completely coordinated with the work of other Sections. Submit maintenance instructions for maintenance of tactile/braille sign.

f. Warranty: Warranty period shall be 1 year from product ship date. Submit a written Manufacturer's warranty for MBTA acceptance, signed by the manufacturer, agreeing to repair or replace panels that fail during the specified warranty period. Failures include, but are not limited to, the following:

1. Coating degradations
2. Chipping, chalking, fogging or discoloration
3. Fading

g. Materials: Zinc Signs

1. 0.125" one-piece zinc plate, utilizing chemical etch process to produce raised characters in compliance with ADA and supplied graphics. Chamfer or ease all sides and corners to remove sharp edges.
2. Manufacturers:
    a. Vivid Manufacturing
    b. Dixie Graphics
    c. Kroy Sign Systems
    d. Or approved equal

h. Attachments:

1. Mechanical:
    a. Threaded inserts appropriate to substrate material – 4 per sign

b. Tamper resistant, ¼" diameter stainless steel Flat Head Phillips Pin-Head screws. Screws shall seat into countersunk holes such that when fully tightened the screw head is flush with sign background surface. Paint screws to match background paint color of sign

c. Non-metallic Washers: Provide rigid neoprene separators between fasteners and non-compatible materials being joined.

2. Adhesive:

a. Where adhesive mounting techniques are specified, very high bond (VHB) tape specifically designed for compatibility with the base materials and the desired adhesive strength shall be used. All adhesives shall be tested on site. All adhesives shall be indicated in the shop drawings.

b. Very high bond (VHB) tape shall be double coated acrylic foam tape as manufactured by the 3M Co. or approved equal.

c. Surfaces on which signage is to be installed using adhesive shall be free of grease, oil, or any other residue.

i. Fabrication:

1. Zinc Signs:

a. Etching: Signs reverse-etched to create all tactile text, lines, arrows, and braille glyphs raised 1/32" high. Braille glyphs shall be standard rounded grade 2 Braille as rendered in the EPS files. Cross section angle of raised characters shall not exceed 45 degrees. Text and Braille shall be finished to provide smooth, non-pointed edges. Background surface shall be smooth texture.

b. Finishes:

1. Background – Mathews baked on acrylic polyurethane enamel paint with eggshell/matte finish. Custom color shall be: Black

2. Foreground – (Tactile lettering only) brushed natural zinc with U.V. resistant clear urethane topcoat.

3. Predrilled holes: Provide for ¼" countersunk mounting holed, centered 3/8" from edges, only in corners of signs scheduled to be screw attached. All other signs to be provided without mounting holes.

c. Installation: Tactile/Braille signs shall be installed plumb and square. In the event that an adjacent material, such as a door frame, is slightly out of plumb, the contractor shall install the Tactile/Braille sign parallel so as to minimize the visal conflict.

T.15.03.11 Distance To Exit (DTE) Signs and Hose Valve

DTE Signs: Tunnel Signage indicating both direction and distance to the two nearest escape routes. DTE signs for this work shall be reflective. Refer to Drawings for additional information.
Hose Valve Signs: Tunnel Signage indicating piping and hose connections at each hose outlet valve.

a. Product Data: Submit manufacturer's product data, installation instructions, use limitations and recommendations for each material used. Provide certifications stating that materials comply with requirements.

b. Shop Drawings: Provide large scale shop drawings for fabrication, installation and erection of all parts of the work. Provide large scale layouts of sign wording, spacing, type

size and style. Provide plans, elevations, and details of anchorages, connections and accessory items. Provide installation templates for work installed by others.

c. Samples: Submit representative samples of each material that is to be exposed in the finished work, showing the full range of color and finish variations expected. Provide full size samples of each signage plaque type being used in the finish work. Full size samples may be incorporated into the finish work if found acceptable.

d. Materials:

1. Aluminum:

a. General: For the fabrication of exposed metal work, use only materials which are smooth and free of surface blemishes including pitting, roughness, seam marks, roller marks and trade names. Do not use materials which have stains and discoloration.

b. Aluminum: Provide Aluminum Association Alloy 60637T5 or 6061T6 or as recommended to suit required service and finish. Aluminum sheet shall be of thickness and sizes shown, constructed of alloy and temper recommended by the aluminum producer or finisher for the type of use and finish indicated with not less than the strength and durability properties specified in ASTM B 209 for 5005-H15, or as noted on drawings.

c. Fasteners: ASTM A307, ANSI B18.2.1, B18.2.2, 818.6.3, and G18.22.1. Bolts, nuts, screws, washers, anchors and other devices required to complete the Work. Same basic metal or alloy as the metal fastened. Stainless Steel Type 302 or 304 series alloy where used to join dissimilar materials.

d. Welding Electrodes and Filler Metal: Provide the alloy and type required for strength, workability, compatibility and color match after grinding smooth and finishing the fabricated product.

e. Mounting:

2. Mounting Materials:

a. Mechanical Mounting: Corrosion resistant Stainless Steel Type 316 series alloy where mounted to concrete and fasteners of a type recommended by the manufacturer for use in other types of substrate encountered at each location.

b. Fire Department Connection and Hose Valve Signs (mounted to brick/block/concrete): 316 Stainless Steel expansion anchors

c. Adhesives: Where adhesive mounting techniques are required, the Contractor shall use adhesives specifically designed for compatibility with the base materials and the desired adhesive strength in accordance with recommendations made by the manufacturer of the materials specified to be laminated and adhered. No adhesives that will fade, discolor or delaminate as a result of proximity to ultraviolet light source or heat or cold shall be used. No adhesives shall change the color or deteriorate the materials to which they are applied. All adhesives shall be of a non-staining non-yellowing quality and all visible joints shall be free from air bubbles and other defects. All adhesives shall be tested on site. All adhesives shall be indicated in the shop drawings.

d. Silicone Adhesive: Holes drilled to accept signs with factory installed mounting studs shall be filled with a silicone adhesive prior to mounting sign.

3. Welding:
    a. Shall be accomplished using the highest standards of workmanship. All pieces shall be cut and carefully fit together. All visible connections shall be full welded and ground smooth. All visible surfaces and connections shall be without visible grounding marks, surface differentiation or variation.
    b. All metal to be free of stain, warpage and any defects impairing strength, durability and appearance.
    c. All welds to comply with the recommendations of the AWS.
4. Fasteners:
    a. Use fasteners fabricated from metals that are not corrosive to the sign material and mounting surface.
5. Anchors and Inserts:
    a. Use 316 stainless steel anchors and inserts as required for corrosion resistance. Furnish inserts, as required, to be set into concrete or masonry work.

f. Graphic Process Types:

1. Applied Vinyl:
    a. All vinyl lettering and sheet materials to be reflective or opaque, as noted on the drawings, and to be die-cut.
    b. No hand cut letters will be accepted.
    c. Messages and graphics to be pre-spaced for application on site.

g. Graphic Requirements: Refer to Drawings for sign graphics, letterforms, word spacing and sizes, and additional detail.

h. Color: Except for reflecting signs, All paint finishes shall have satin, non-glare finish, with UV protection for all colors. Samples of all colors are to be submitted for approval before fabrication commences. Color references shall be indicated on Drawings.

i. Finishing Materials:

1. Polyurethane Coatings: Provide the following, or other products as acceptable to Engineer of Record:
    a. Acrylic Polyurethane Enamel: two-component, acrylic modified, aliphatic polyurethane enamel having UV inhibitors and engineered for application to signage components. Gloss sheen of 90+/- five units at 60 degrees. Flat sheet of 10+/- five units at 60 degrees. Matthews Paint Co. “Series 40 Matthews Acrylic Polyurethane" or Engineer of Record approved equal.
    b. Pigmented (Opaque) Finishes: Completely cover to provide an opaque, smooth surface of finish, color, appearance and coverage. Cloudiness, surface imperfections will not be acceptable.
    c. Paint Finishes: Use multiple coats to produce glass-smooth surface finish or even luster. Provide a finish free of laps, cloudiness, color irregularity, runs, brush marks, orange peel, nail holes, or other surface imperfections.
        1. Provide satin finish for final coats, unless otherwise indicated.

j. Fabrication of Signs and Supports:

1. General: Provide custom manufactured sign assembled components completely fabricated and finished at factory before delivery to site. Construct to accurate detail and dimensions as shown and on approved shop drawings. Fit and assemble the work

at shop to the greatest extent possible and mark the components as required to facilitate assembly during installation.
2. Exposed Fasteners: Exposed fasteners on finished faces will be allowed. When exposed fasteners are used, finish the fastener to match the color and texture of surrounding materials.
a. Seamless Construction: All sign surfaces and edges to be seamless unless specifically indicated.

3. Metal Signs and Supports: Fabricate exposed surfaces uniformly flat and smooth, without distortion, pitting or other blemishes. Form exposed metal edges to a smooth radius. Grind exposed welds and rough areas to make flush with adjacent smooth surfaces.
a. Welding: Make welds continuous. Comply with American Welding Society, Aluminum Association, and standards for the type of metal.
b. Fasteners: Use exposed fasteners only where indicated. Perform drilling and tapping at shop.
c. Dissimilar Materials: Where metal surfaces will be in contact with dissimilar materials, coat the surfaces with epoxy paint or provide other means of dielectric separation as recommended by manufacturer to prevent galvanic corrosion.

k. Installation:
1. DTE signs shall comply to requirements of the most current addition of NFPA 502. DTE signs shall be provided on both side walls at distances no more than 82 feet.
2. Strictly comply with manufacturer's instructions and recommendations, except where more restrictive requirements are specified in this section.
3. Signs shall be installed parallel to the slope of the tunnel and orientation shown on the drawings, unless directed otherwise by the Engineer of Record, with sign surfaces free from distortion or other defects in appearance.
4. Exposed surfaces of fasteners should be field coated with paint to match surrounding surface color; exposed threads to be protected from paint to allow future maintenance of signs.
5. Anchor bolts and nuts to be coated with corrosion-resistant grease to allow future maintenance of signs.
6. Contractor to provide repair and touch up prior to and after punch list inspection.
7. Contractor to be responsible for the removal of all crating and debris from the project site upon completion.

T.15.04 METHOD OF MEASUREMENT.

T.15.04.1. Directional, Regulatory. "Directional, Regulatory" will be measured per lump sum actually furnished and installed in accordance with the Plans and/or as directed by the Engineer.

T.15.04.2 Tactile Braille, DTE and Hose Valve Signs. “Tactile Braille, DTE and Hose Valve Signs” will be measured per lump sum actually furnished and installed in accordance with the Plans and/or as directed by the Engineer.

T.15.05 BASIS OF PAYMENT.

T.15.05.1 T15 Directional regulatory tactile braille hose valve warning signs will be paid for at the

contract price per lump sum. The price so-stated shall constitute full and complete compensation for all labor, materials and equipment, including posts, and hardware, and all incidentals required to finish the work, complete in place and accepted by the Engineer.

CODE T18.9901
BARRIER WALL DELINEATORS

SECTION T.18 DELINEATORS AND HAZARD MARKERS T.18.01 DESCRIPTION. This work consists of furnishing and erecting delineators of the type and design as indicated on the Plans and/or as directed by the Engineer, all in accordance with these Specifications. This work also includes the provision of flexible delineator and all mounting hardware.

T.18.02 MATERIALS. Single or multi-reflector delineators, reflectorized sheeting, and posts shall conform to the applicable requirements of SECTION M.16; SIGNS AND SIGN SUPPORTS, of these Specifications.

T.18.02.1 Flexible Delineator Posts. The delineators shall be manufactured from a flexible material which meets the following requirements:

a. Height. The overall dimensions of the delineator shall be such that when installed in accordance with the manufacturer's instructions, the delineator shall extend 6-inches from the tunnel wall surface.

b. Delineators shall remain flexible at temperatures between 0°F and 140°F and shall be durable, resistant to impact, ultraviolet light, ozone hydrocarbons and other atmospheric weathering. Delineators shall be yellow.

d. Surfaces. Both the front and back surfaces of the delineator shall be smooth surfaces capable of accepting 3-inch wide reflective sheeting.

T.18.02.2 Sheeting. Reflective sheeting shall be Type III meeting the requirements of Subsection M.16.02; Reflective Sheeting and shall be applied to one side of the post as specified on the Plans. The reflective sheeting shall be 3 inches wide and 6, inches high. The color of the sheeting shall be white, yellow.

T.18.03 CONSTRUCTION METHODS. T.18.03.1 Delineators. The spacing, placement, type, and color of the delineators shall be as shown on the contract drawings Delineators shall be installed using adhesive 795A or approved equivalent. Surface shall be clean, dry and free of contaminants before application.

T.18.04 METHOD OF MEASUREMENT. "Barrier Wall Delineators", will be measured by each unit of the type or types actually furnished and installed in accordance with the Plans and/or as directed by the Engineer.

T.18.05 BASIS OF PAYMENT. The accepted quantities of "Barrier Wall Delineators," will be paid for at the contract unit prices per each Delineator, as listed in the Proposal. An additional 10% shall be supplied as spares. The prices so-stated constitute full and complete compensation for all labor, tools, materials and equipment, including the reflector units, and all incidentals required to finish the work, complete in place and accepted by the Engineer.

CODE T20.9901
PRE-FORMED PRE-PATTERNED PAVEMENT MARKING MATERIAL

T20.9901.01 DESCRIPTION. This work shall consist of furnishing and applying inlaid pavement marking tape as specified in the Contract Documents and as directed by the Engineer. The materials used shall perform in accordance with the specification, functional, and environmental requirements.

T20.9901.02 MATERIALS. The tape shall be Pre-Formed Pre-Patterned Pavement Marking Material (i.e., 3M™ Stamark™ High Performance Tape Series 380IES). Manufacturer's Materials Certification shall be provided as requested by Agency. The tape shall be yellow in color.

T20.9901.03 CONSTRUCTION.

CONTRACTOR'S RESPONSIBILITIES:
(a) General. The Contractor shall provide a copy of the manufacturer's application recommendations to the Engineer. The Tape shall be stored and inlaid per the Manufacturer's recommendations, and as directed by the Engineer. A pre-construction meeting shall be conducted in order to coordinate the hot mix asphalt (HMA) pull width scheme to ensure that the pavement marking tape installation will be offset from the asphalt seam. This pre-construction meeting will include the paving contractor, the striping contractor, the agency and may also include a tape manufacturer's representative as determined by the Engineer.

On new HMA projects, the tape shall be inlaid into the final HMA surface of the pavement. The tape shall be applied during the final compaction and rolled slowly into the HMA by the finish roller with no vibration and minimal water use. The tape shall be inlaid while the surface temperature is within the Manufacturer's recommended guidelines without disruption to the compaction process. **Generally, the desired surface temperature will be between 130°F (54°C) and 160°F (71°C). Using a non-contact IR thermometer, test the temperature of the asphalt surface.** If using a stiffer mix, rubber-based mix (rubberized asphalt), Superpave, OGFC (Open Grade Friction Course) or SMA (Stone Matrix Asphalt), you may need to increase the temperature at which the tape is recessed with a finishing roller to reach the desired amount of embedment into the surface. **Inlay the tape with the finishing roller while the surface temperature is warm enough to get approximately 50 to 60 percent of the tape's thickness below the asphalt surface. Do not exceed 180°F (83°C).** Refer to Manufacturer's recommendations information folder 5.7 Page 6 Inlay Application of Transverse Markings for additional detail.

The striping contractor shall not apply the tape any closer than 4 inches (10.16 cm) from the asphalt seam, unless agreed to by both the Engineer and the Tape Manufacturer's representative. The Engineer will not permit the final HMA course to be placed unless the striping crew and striping materials are at the project site. The pavement marking striper will begin the application process after the compaction process is completed by the paver. Pavement Marking Tape shall conform to pavement contours and be resistant to deformation under normal traffic conditions. Equipment used in the application of the tape shall conform to the Manufacturer's recommendations and as approved by the Engineer. After striping tape is applied and the surface has cooled sufficiently, the road surface shall be immediately ready for traffic.

Inspection. The embedment of the inlaid tape shall be randomly checked by the contractor using a milled gauge or other tool approved by the Engineer. The target embedment is approximately 50 to 60 percent of the tape's thickness below the asphalt surface. The Engineer shall be notified in advance so as to have the opportunity to witness this procedure. Non-conforming material shall be repaired by the striping contractor according to the Manufacturer's recommendations.

No significant visual defects after installation (such as buckling or line waviness) prior to the opening of traffic, as determined by the Engineer's visual inspection.

Retroreflectance.
Initial retroreflectivity values, measured in mcd/lux/m², shall not fall below 500 and 300, for white and yellow tape respectively.

Warranty.
The manufacturer shall warrant that pavement marking material sold for longitudinal and symbol and legend pavement marking applications in the United States and Canada will remain effective for its intended use under normal traffic conditions and meet the minimum retained coefficient of retroreflection value of 100 millicandelas per foot squared per foot-candle (measured at 1.05° observation and 88.76° entrance angles) subject to the following provisions:

TABLE 1

APPLICATION*	WARRANTY PERIOD
Longitudinal Markings	4 years
Symbols and Legends	2 years

Note: Entrance angle 88.76° and Observation Angle 1.05° represent a simulated driver viewing geometry at a 30 meter distance.

If the pavement markings are applied in accordance with all the manufacturer's application recommendations and fail during the warranty period, fail to adhere to the roadway, or fail due to complete wear-through during the warranty period shown above (from the date of installation), the manufacturer's sole responsibility and purchaser's and user's exclusive remedy shall be:

The contractor will provide the replacement materials that will restore the pavement marking retroreflectivity values to warranty levels or greater. The contractor shall warranty, for the first year, 95% of the installation will remain intact and serviceable. It shall show no fading, lifting, shrinking, tearing, rollback, distortion or chipping due to vehicular traffic or normal maintenance activities. Although some wear is expected, the markings shall not wear out for the first year at 95% intact and serviceable.

The contractor shall provide any manufacturer's warranties or guarantees that exceed the minimum requirements stated previously, that are normally provided by the manufacturer.

Conditions

Such failure must be solely the result of design or manufacturing defects in the pavement marking material and not of outside causes such as improper installation or substrate failure. Failure to follow recommended application procedures will void this warranty. Damage to pavement markings caused by snow removal equipment is not covered under this warranty.

A visual night inspection must be made with a manufacturer's representative and a customer representative present to identify areas of the installation which appear to be below the minimum retained reflectance values of 100 millicandelas per foot squared per foot-candle. Areas which appear to be below the minimum retained reflectance value shall be identified as "zones of measurement." To qualify for material replacement, a "zone" must be at least 360 feet in road length and consist of either edge lines, center lines or lane lines, but not in combination, or a single word or symbol marking. Detailed reflectance measurement procedures are provided in the product bulletin provided by the manufacturer.

T20.9901.04 METHOD OF MEASUREMENT. "Pre-Formed Pre-Patterned Pavement Marking Material " will be measured by the number of linear feet (excluding skips and spaces) actually installed or removed, as the case may be, in accordance with the Plans and/or as directed by the Engineer.

T20.9901.05 BASIS OF PAYMENT. The accepted quantity of "Pre-Formed Pre-Patterned Pavement Marking Material" will be paid for at their respective contract unit prices per linear foot. The prices so-stated shall constitute full and complete compensation for all labor, tools, materials and equipment, including protection of newly applied markings from traffic, layout, cleaning and sweeping, furnishing and applying the pavement markings, and all incidentals required to finish the work, complete in place and accepted by the Engineer.

CODE T20.9902
LINEAR DELINEATION SYSTEM PANELS

T20.9902.01 DESCRIPTION. This specification covers structured wide-angle retroreflective panels designed for segmented or continuous marking of concrete barriers and/or guardrails. The panels shall be fluorescent yellow. The panels shall be designed to provide highly effective, long-life daytime and nighttime visibility in typical roadway barrier configurations.

T20.9902.02 MATERIALS. Each panel shall be constructed of cube-corner retroreflective material in standard highway colors permanently bonded to an aluminum substrate. The lateral edges of each panel shall be hemmed. The panel assembly shall have a repeating raised lateral ridge every 2.25 inches, 0.34 inches in height. Each panel shall not be less than 34 inches in length. Panel shall be available in 4.00 inch and 6.00 inch widths. Each panel shall be designed to attach/adhere to and shall be compatible with concrete safety barriers and/or highway guardrails.

Requirements

Dimensions

Each panel shall not be less than 34-inches nominal length. Panels shall be available in both 4-inch and 6-inch widths. Each panel shall have 14 raised lateral ridges spaced every 2.25 inches. Each ridge shall be 0.34 inches high with a 45° profile and a 0.28 inch radius top.

Color

Conformance to the daytime color requirements shall be determined from measurement of the retroreflective sheeting applied to aluminum test panels. Daytime color shall be measured instrumentally using a spectrophotometer employing annular 45/0 (or equivalent 0/45) illuminating and viewing geometry. Measurements shall be made in accordance with ASTM E1164 for ordinary colors or ASTM E2153 for fluorescent colors. Chromaticity coordinates shall be calculated for CIE Illuminant D65 and the CIE 1931 (2o) Standard Colorimetric Observer in accordance with ASTM E308 for ordinary colors or ASTM E2152 for fluorescent colors.

Table A
Chromaticity Limits for Fluorescent Yellow

	x	Y	x	y	x	y	x	y	Total Luminance Factor Y_T (%) Min
Fluor. Yellow	0.521	0.424	0.557	0.442	0.479	0.520	0.454	0.491	40

Fluorescence (Y_F)

Fluorescent luminance properties differentiate fluorescent sheeting from ordinary (non-fluorescent) sheeting. The Fluorescence Luminance Factor Y_F, provides a standardized measure of the sheeting fluorescent properties. The numerical value of Y_F sheeting under specified illumination and viewing conditions verifies the fluorescent properties of the sign sheeting (for non-fluorescent sheeting Y_F=0). The minimum fluorescence luminance factor (Y_F) values of the retroreflective sheeting conform to:

Color	Y_F (%) min.
Fluor. Yellow	25

Fluorescence (Y_F)

Fluorescent luminance properties differentiate fluorescent sheeting from ordinary (non-fluorescent) sheeting. The additional sign luminance produced by fluorescence is directly related to the increased visual performance of fluorescent signing under the varying conditions of daylight illumination encountered in outdoor signing applications. The Fluorescence Luminance Factor, Y_F, provides a standardized measure of the fluorescent luminance. The numerical value of Y_F sheeting under specified illumination and viewing conditions 1) verifies the fluorescent properties of the sign sheeting (for non-fluorescent sheeting Y_F=0) and 2) quantifies the fluorescent contact (efficiency) of the sign sheeting. The magnitude of Y_F can be used to assess whether the fluorescent content is sufficient to provide high daytime visibility performance under poor visibility conditions. The minimum fluorescence luminance factor (Y_F) values of the retroreflective sheeting conform to:

Color	Y_F (%) min.
Fluorescent Orange (new)	17
Fluorescent Orange (weathered)	13

Retroreflectance

Linear Delineation Panels are designed to be highly visible at night in a wide array of roadway geometries. Their retroreflectance performance is unique. The panels are designed to perform on both straightaway road sections, where the panels are installed parallel to the roadway, and on curved road sections where the panels may be installed near perpendicular to the road path approach. The ASTM and CIE guidelines for measurement of retroreflective materials accommodate each of these scenarios by recommending a different measurement parameter for each.

Photometric Range Measurements

R_L specifications (applicable to straight road sections where the panels are installed parallel to the travel lane). ASTM E 809, Section 6.4, describes this measurement as the *"coefficient of reflected luminance* (also called *specific luminance*) – it considers the retroreflector as a surface source whose projected area is visible as an area at the observation position." The R_L measurement is typically used in pavement marking applications and is appropriate when the retroreflective target has an elongated projected area. The coefficient of reflected luminance is given in units of candelas per square meter per lux (cd/m^2/lx).

For example, in a work zone roadway scene where a concrete barrier is used to temporarily divide traffic lanes, the barrier is typically placed to the left of the travel lane with a narrow shoulder. The entrance and observation angles for panels in these situations fall in the following ranges listed below.

TYPICAL R_L Values – Fluorescent Yellow
($cd/m^2/lux$)

	0.2 obs	0.33 obs	0.5 obs	1.0 obs	1.5 obs	2.0 obs
88.5 ent	162	120	72	30	15	6

R_A Specification (applicable to curves and approaches to curves). ASTM E 809, Section 6.1, states "*the coefficient of reflection* – is usually used to specify the performance of retroreflective sheeting, it considers the retroreflector as an apparent point source whose retroreflected luminous intensity is dependent on the area of the retroreflective surface involved." The R_A measurement is typically used for standard sign, work zone device, and object marker specifications. The coefficient of retroreflection is given in units of candelas per lux per square meter ($cd/lux/m^2$).

For a roadway scenario where a concrete barrier, guardrail, or other traffic control device is used to separate or guide traffic in curve situations, the following entrance and observation calculations can be shown to apply where the device is viewed through a range of entrance angles.

TYPICAL R_A Values – Fluorescent Yellow
($cd/lux/m^2$)

	0.2 obs	0.33 obs	0.5 obs	1.0 obs	1.5 obs	2.0 obs
-4/+5 ent	360	324	252	45	12	6
20 ent	280	246	175	40	12	6
40 ent	255	180	132	30	12	6
60 ent	110	94	70	20	9	5
80 ent	50	28	20	6	3	2

Roadway Presence
The Linear Delineation System Panels shall be applied per recommended practice. The panels will provide daytime and nighttime delineation of concrete barriers, guardrails, and roadside objects. The recommended panel / gap configuration will provide enhanced contour perception of changes in roadway geometry and conspicuity of objects. Refer to Product Bulletin 344/346 for recommended application practices.

T20.9902.03 METHOD OF MEASUREMENT. "Linear Delineation System Panels" will be measured by the number of each unit actually installed or removed, as the case may be, in accordance with the Plans and/or as directed by the Engineer.

T20.9902.04 BASIS OF PAYMENT. The accepted quantity of "Linear Delineation System Panels" will be paid for at their respective contract unit prices per each. The prices so-stated shall constitute full and complete compensation for all labor, tools, materials and equipment, including protection of newly applied markings from traffic, layout, cleaning and sweeping, furnishing and applying the pavement markings, and all incidentals required to finish the work, complete in place and accepted by the Engineer.

PROJECT: East Side Tunnel Rehabilitation RIDOT NO.:
PTS #: SHEET NO.:
COMPUTED BY: CHECKED BY DATE:

QUANTITIES

ITEM NO.	DESCRIPTION	QTY	UNITS	UNIT PRICE	AMOUNT
201.0420	REMOVE AND DISPOSE CONCRETE SLAB	292	SY		
201.0428	REMOVAL AND DISPOSAL OF EXISTING CATCH BASIN GRATES	22	EA		
201.9901	REMOVE AND DISPOSE TUNNEL LIGHTING SYSTEM	1	LS		
201.9902	SELECTIVE DEMOLITION	1	LS		
202.0100	EARTH EXCAVATION	193	CY		
203.0600	FILL GRAVEL BORROW UNDER STRUCTURES	4	CY		
401.1000	CLASS 12.5 HMA	1,020	TON		
601.0200	CLASS XX PORTLAND CEMENT CONCRETE	22	CY		
601.0501	CLASS B PORTLAND CEMENT CONCRETE	320	CY		
701.0512	REINFORCED CONCRETE PIPE M 170 CLASS IV 12 INCH	100	LF		
701.5204	4 INCH DUCTILE IRON PIPE	1,360	LF		
701.9901	FIRE STANDPIPE SYSTEM PIPING AND APPURTENANCES	1	LS		
701.9902	METAL DUCTS	1	LS		
701.9903	AIR DUCT ACCESSORIES	1	LS		
701.9904	CENTRIFUGAL HVAC FANS	1	LS		
701.9905	UNIT HEATERS	1	LS		
701.9906	MODULAR SEAL SYSTEM FOR CONNECTION TO EXISTING WALL DRAINS	62	EA		
702.0210	SOLID BLOCK SHALLOW 4'-0" ROUND MANHOLE STANDARD 3.2.2	1	EA		
702.0605	PRECAST 4'-0" ROUND CATCH BASIN	2	EA		
702.0722	SOLID BLOCK SHALLOW TYPE "F" CATCH BASIN	4	EA		
703.9901	12 INCH POLYMER COATED CORRUGATED STEEL PIPE	3,236	LF		
703.9902	12 INCH SLOTTED DRAIN PIPE - 6 INCH GRATE (CORRUGATED STEEL PIPE)	640	LF		
703.9903	12 INCHFABRICATED CLEAN-OUT TEE (CORRUGATED STEEL PIPE)	26	EA		
703.9904	12 INCH X 6 INCH FABRICATED WYE (CORRUGATED STEEL PIPE)	26	EA		
703.9905	CELLULAR GLASS INSULATION FOR DUCTILE IRON PIPE - 1 INCH THICK	914	LF		
703.9906	GUTTER DRAIN CONNECTION	1	LS		
806.9901	EXTERIOR FINISH CARPENTRY	1	LS		
806.9902	BUS SHELTER TIE BEAM	1	EA		
807.0200	SPLIT FACE MASONRY	15	CY		
807.0350	MASONRY REPOINTING OF MORTAR JOINTS	12,540	LF		
807.0351	MASONRY REPAIR	279	SF		
807.0352	MASONRY CLEANING	2,090	SF		
810.0210	GALVANIZED BAR REINFORCEMENT GRADE 60	300	lbs		
810.0702	WELDED WIRE FABRIC (GALVANIZED)	1,077	SF		
817.9901	REPAIRS TO STRUCTURE CONCRETE MASONRY - SPALLS - S1	10	SF		
817.9902	REPAIRS TO STRUCTURE CONCRETE MASONRY - SPALLS - S2	1,457	SF		
817.9903	REPAIRS TO STRUCTURE CONCRETE MASONRY - SPALLS - S3	71	SF		
817.9904	REPAIRS TO STRUCTURE CONCRETE MASONRY - SPALLS - S4	10	SF		
817.9905	REPAIRS TO STRUCTURE CONCRETE MASONRY - SHOTCRETE	39	CY		
819.0800	DRILL AND GROUT REINFORCING DOWELS	7,788	EA		
819.0900	DRILL AND SET CONCRETE EXPANSION ANCHORS	1,000	EA		
820.0100	CONCRETE SURFACE TREATMENT PROTECTIVE SEALER	1,644	SF		
820.0200	HIGH PRESSURE WATER CLEANING OF CONCRETE SURFACES	97,000	SF		
824.0000	STRUCTURAL STEEL REPAIRS	3,953	LBS		
824.0710	STAINLESS STEEL FURNISH FABRICATE AND ERECT ELETRICAL CONDUIT AND LUMINAIRE SUPPORTS	10,000	LBS		
824.9901	STAINLESS STEEL DOORS AND FRAMES, DOOR HARDWARE, SEALANT	1	EA		
824.9902	BUS SHELTER CAST COLUMN	1	EA		
825.8025	SURFACE PREPARATION TO SSPC-SP6 STANDARDS	128	SF		
825.9901	STRUCTURAL FIRE PROTECTION	5,000	SF		
830.9901	MIRROR DEFLECTOR - STRUCTUAL STEEL	32	EA		
836.0100	STRUCTURAL CONCRETE CRACK REPAIR BY EPOXY-RESIN BASE ADHESIVE INJECTION	295	LF		
836.9901	REPAIRS TO STRUCTURE CONCRETE MASONRY - LEAKING CRACK REPAIRS - C2	10	LF		
836.9902	REPAIRS TO STRUCTURE CONCRETE MASONRY - LEAKING CRACK REPAIRS - C3	10	LF		
836.9903	REPAIRS TO STRUCTURE CONCRETE MASONRY - LEAKING CRACK REPAIRS - C4	1,622	LF		
840.0100	DECK SURFACE CONCRETE REMOVAL BY HYDRODEMOLITION	67,386	SF		
842.0100	ANTI GRAFFITI COATING	28,750	SF		
842.9901	PAINTING	28,700	SF		
901.0700	GUARDRAIL ENERGY ABSORBING TERMINAL IMPACT ATTENUATOR	1	EA		
932.0200	FULL-DEPTH SAWCUT OF BITUMINOUS PAVEMENT	8,500	LF		
932.0230	FULL DEPTH SAWCUT OF PORTLAND CEMENT CONCRETE SIDEWALK/DRIVEWAY	8,500	LF		
935.0400	REMOVING BITUMINOUS PAVEMENT BY MICRO MILLING	44,775	SF		
T04.9901	XHHW LSZH - 12 AWG	2,139	LF		
T04.9902	XHHW LSZH - 10 AWG	8,234	LF		

PROJECT:	East Side Tunnel Rehabilitation	RIDOT NO.:	
PTS #:		SHEET NO.:	
COMPUTED BY:	CHECKED BY	DATE:	

QUANTITIES

T04.9903	XHHW LSZH - 8 AWG	5,643	LF		
T04.9904	XHHW LSZH - 6 AWG	3,960	LF		
T04.9905	XHHW LSZH - 4 AWG	6,600	LF		
T04.9906	XHHW LSZH - 2 AWG	28,605	LF		
T05.9901	PULL BOX - 12" X 12" X 6"	24	EACH		
T05.9902	PULL BOX - 16" X 16" X 6"	65	EACH		
T06.5220	2" SCHEDULE 80 POLYVINYLE CHLORIDE PLASTIC CONDUIT UNDERGROUND	220	LF		
T06.9901	3/4" LMFC	713	LF		
T06.9902	1" RTRC	495	LF		
T06.9903	2" RTRC	6,084	LF		
T09.1000	SERVICE PEDESTAL	1	EACH		
T07.9901	FURNISH AND INSTALL TUNNEL LUMINAIRE - 102W (TYPE L1 & L4)	55	EA		
T07.9902	FURNISH AND INSTALL TUNNEL LUMINAIRE - 210W (TYPE L2)	38	EA		
T07.9903	FURNISH AND INSTALL TUNNEL LUMINAIRE - 140W (TYPE L3)	18	EA		
T07.9904	FURNISH AND INSTALL ELECTRICAL ROOM LUMINAIRE	2	EA		
T07.9905	TUNNEL LIGHTING CONTROL SYSTEM	1	LS		
T07.9907	FURNISH AND INSTALL BUS SHELTER LUMINAIRE	9	EA		
T07.9911	FURNISH TUNNEL LUMINAIRE (SPARE) - 102W (TYPE L1 & L4)	2	EA		
T07.9922	FURNISH TUNNEL LUMINAIRE (SPARE) - 210W (TYPE L2)	2	EA		
T07.9933	FURNISH TUNNEL LUMINAIRE (SPARE) - 140W (TYPE L3)	2	EA		
T15	DIRECTIONAL, REGULATORY, TACTILE BRAILLE, HOSE VALVE SIGNS	1	LS		
T18.9901	BARRIER WALL DELINEATORS	450	EA		
T20.2412	12 INCH WHITE FINAL EPOXY RESIN PAVEMENT MARKINGS	26	LF		
T20.2804	4 INCH YELLOW FINAL EPOXY RESIN PAVEMENT MARKINGS	4,360	LF		
T20.2806	6 INCH YELLOW FINAL EPOXY RESIN PAVEMENT MARKINGS	4,360	LF		
T20.9901	PRE-FORMED PRE-PATTERNED PAVEMENT MARKING MATERIAL	4,360	LF		
T20.9902	LINEAR DELINEATION SYSTEM PANELS	32	EA		
M05.04.9	METAL CASTINGS	1	EA		
M05.04.10	COPPER ROOF CEILING AND ORNAMENTS	1	LS		

ALLOWANCES

T07.9906	TUNNEL LIGHTING SERVICE CONTRACT	1	LS	$	180,000.00	$	180,000.00
300.2250	LOAD HAUL AND DISPOSE OF CONTAMINATED SOIL PER SECTION 300225	350	TN	$	77.11	$	26,988.50
T09.1000	SERVICE PEDETAL - RI Energy CoT	1	LS	$	7,052.82	$	7,052.82

Subtotal	$	214,041
15% E+C	$	-
Total	$	214,041

INDEX

RHODE ISLAND PUBLIC TRANSIT AUTHORITY

RHODE ISLAND PUBLIC TRANSIT AUTHORITY

PLAN, PROFILE AND SECTIONS OF PROPOSED

RIPTA TUNNEL

EAST SIDE TUNNEL REHABILITATION

SUBMISSION: PS&E
JUNE 29, 2023

CITY OF PROVIDENCE
COUNTY OF PROVIDENCE
RIPTA INVITATION FOR BID NO. 23-34

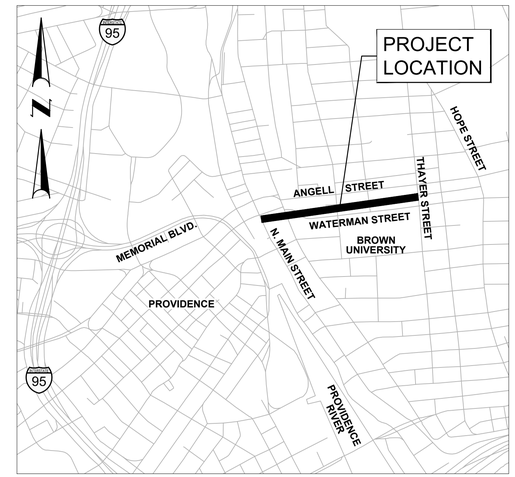

LOCATION MAP
SCALE: 1"=1,000'

R.I. STANDARD SPECIFICATIONS AND STANDARD DETAILS

SPECIFICATIONS TO GOVERN THIS PROJECT ARE THE R.I. STANDARD SPECIFICATIONS FOR ROAD AND BRIDGE CONSTRUCTION, AMENDED MARCH 2018, WITH ALL REVISIONS AND THE STATE AND FEDERAL SPECIAL PROVISIONS INCLUDED IN THE CONTRACT DOCUMENTS. STANDARD DETAILS FOR THIS PROJECT ARE R.I. STANDARD DETAILS, AMENDED MARCH 2018, WITH ALL REVISIONS.

PROJECT LIMIT
NORTH MAIN STREET
STATION 21+25
RIPTA INVITATION FOR BID NO. 23-34

PROJECT LIMIT
THAYER STREET
STATION 0+00
RIPTA INVITATION FOR BID NO. 23-34

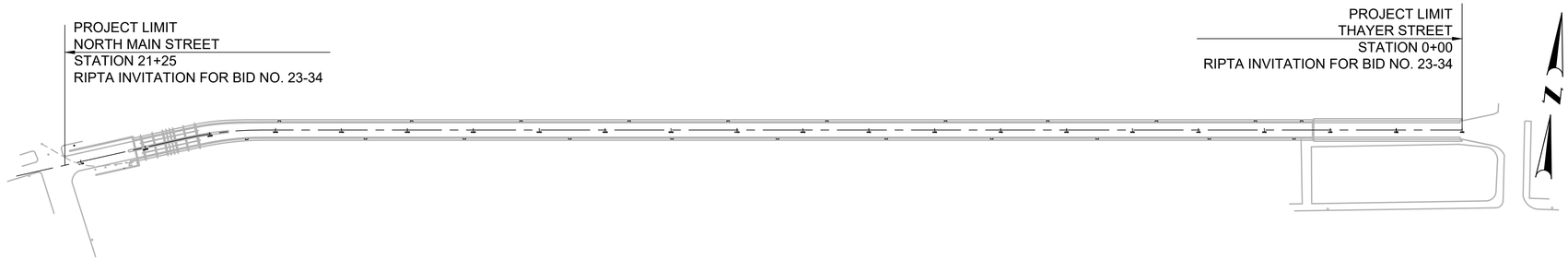

RICHARD L. PETTINELLI
No. 12879
REGISTERED PROFESSIONAL ENGINEER CIVIL
06-29-2023

PLAN SHEET NOS. 1-3, 51-60, 79-81

A. ERIC OFFENBERG
No. 7866
REGISTERED PROFESSIONAL ENGINEER CIVIL
6/29/23

PLAN SHEET NOS. 4-41

AMIR DEGANY
No. 0040
REGISTERED ARCHITECT
9/20/2023

PLAN SHEET NOS. 42-50

LAYOUT PLAN
SCALE: 1" = 500

SCALES OF DRAWINGS

Plans	1 inch = 20 & 40 feet
Elevations	1 inch = 10 & 20 feet
Bus Shelter Plans	1 inch = 4 feet

BASE OF LEVELS
NORTH AMERICAN VERTICAL DATUM OF 1988
RI STATE PLANE COORDINATE SYSTEM
SPC 3800 RI (NAD83)

DANIEL T DIRGINS
No. 0013032
REGISTERED PROFESSIONAL ENGINEER (MECHANICAL)
6/29/23

PLAN SHEET NOS. 61-62, 72-78

JEFFREY L. WALSH
No. 7083
REGISTERED PROFESSIONAL ENGINEER (ELECTRICAL)
6/29/23

PLAN SHEET NOS. 63-71

RHODE ISLAND PUBLIC TRANSIT AUTHORITY

APPROVED

ADMINISTRATOR, PROJECT MANAGEMENT — DATE

APPROVED

CHIEF ENGINEER OF INFRASTRUCTURE — DATE

APPROVED

DIRECTOR — DATE

WSP USA INC.
100 SUMMER STREET, 13TH FLOOR
BOSTON, MA. 02110
166 VALLEY STREET, BUILDING 5,
PROVIDENCE, RI 02909
WWW.WSP.COM

RHODE ISLAND PUBLIC TRANSIT AUTHORITY

SCALE: AS NOTED

REVISIONS			REVISIONS		
NO.	DATE	BY	NO.	DATE	BY

EAST SIDE TUNNEL REHABILITATION
PROVIDENCE — RHODE ISLAND
COVER SHEET

DESIGNED BY: XXX
CHECKED BY: XXX
DATE: 06/29/2023
PLAN NO.: G-01
SHEET: 1 OF: 81

COVER.dwg

EXISTING		NEW
	EDGE OF PAVEMENT	
	BERM	
	CURB	
	GUARDRAIL	
MB	MAILBOX	
NO.	UTILITY POLE	NO.
	POLE GUY	GUY
	LUMINARE	
SIGN	SIGN	
(SIZE)SD	SUBDRAIN	N(SIZE)SD (Length Size)
(SIZE)D	STORMDRAIN	(Length Size)
(SIZE)S	SANITARY SEWER	
(SIZE)W	WATER MAIN	N(SIZE)W
(SIZE)G	GAS MAIN	N(SIZE)G
(SIZE)T	TELEPHONE DUCT	N–#(SIZE)T
(SIZE)E	ELECTRIC DUCT	N–#(SIZE)E
	PLUG AND CAP PIPE	
	ABANDONED UTILITY	
	FLARED END SECTION	
	HEADWALL	
WG OR GG	WATER OR GAS GATE	
CB	CATCH BASIN	
MH	MANHOLE	
HYD	HYDRANT	
1+00	BASELINE OR CENTERLINE	1+00
EXIST. S.H.L. PLAT NO. XX	STATE HIGHWAY LINE	NEW S.H.L. PLAT NO. XX
EXIST. S.F.L. PLAT NO. XX	STATE FREEWAY LINE	NEW S.F.L. PLAT NO. XX
EXIST. P.E.B.	PERMANENT EASEMENT LINE	NEW P.E.B.
EXIST. T.E.B.	TEMPORARY EASEMENT LINE	NEW T.E.B.
	PROPERTY LINE	
CITY NAME / TOWN NAME	CITY OR TOWN LINE	
PWW	PAVED WATERWAY	
ELEV.	CONTOUR LINE	ELEV.
	OPEN DITCH	
R.I.H.B.	R.I. HIGHWAY BOUND	
S.B.	STONE BOUND	
	RETAINING WALL	
	FIELD STONE WALL	
NO. TYPE	BORINGS	NO.
	FENCE	
	WOOD OR BRUSH LINE	
	TREES	
(NAME)	RIVER OR STREAM	
	WETLAND AREA	
NO. TYPE MATERIAL	BUILDING	
	FOUNDATION	
	BUILDING TO BE REMOVED	
	RAILROAD TRACKS	
	CUT AND MATCH	
	RIP–RAP	
	CUT SLOPE	ROADWAY / TOP OF SLOPE
	FILL SLOPE	ROADWAY / TOE OF SLOPE
	ROCK CUT	ROCK SHELF / ROCK CUT
00x00	SPOT GRADE	00.00
	AREA GRADED TO DRAIN	ELEV.
	BALED HAY RI STD 9.1.0	
	BALED HAY & SILT FENCE RI STD. 9.3.0	
123 124 125	EDGE OF WETLAND	
	WETLAND PERIMETER	
ASSF	AREA SUBJECT TO STORM FLOW	
100 YR. FLOOD BOUNDARY	100–YEAR FLOOD PLAIN	
	LIMIT OF DISTURBANCE	LIMIT OF DISTURBANCE
	LIMIT OF CLEARING	LIMIT OF CLEARING

1.1.0	UNDERDRAIN
1.3.0	CONCRETE CONNECTING COLLAR
2.1.0	CONCRETE HEADWALLS FOR PIPE CULVERTS
2.2.0	STANDARD HEADWALLS FOR MULTIPLE 3'–6" TO 7'–0' PIPE CULVERTS
2.3.0 (DIA.)	PRECAST CONCRETE FLARED END SECTION
3.2.0	BRICK/SOLID BLOCK 4'–0" ROUND MANHOLE
3.2.1 (DIA.)	BRICK/SOLID BLOCK 5'–0" OR 6'–0" ROUND MANHOLE
3.3.0	BRICK/SOLID BLOCK TYPE "D" SQUARE CATCH BASIN
3.3.2	BRICK/SOLID BLOCK TYPE "F" SQUARE CATCH BASIN
3.3.3	SOLID BLOCK FLUSH SQUARE CATCH BASIN
3.4.0	BRICK/SOLID BLOCK TYPE "D" ROUND CATCH BASIN
3.4.1	BRICK/SOLID BLOCK ROUND CATCH BASIN WITH GUTTER INLET
3.4.2	BRICK/SOLID BLOCK TYPE "F" ROUND CATCH BASIN
3.4.3	BRICK/SOLID BLOCK TYPE "R" CATCH BASIN
3.4.4	SOLID BLOCK FLUSH ROUND CATCH BASIN
3.4.5 (DIA.)	BRICK/SOLID BLOCK 5'–0" OR 6'–0" ROUND CATCH BASIN
3.5.0	SOLID BLOCK SHALLOW TYPE "F" SQUARE CATCH BASIN
3.5.1 (SIZE)	SOLID BLOCK SHALLOW 5'–0" OR 6'–0" SQUARE CATCH BASIN
3.6.0	BRICK/SOLID BLOCK DROP INLET
3.7.0 (DIA.)	BRICK/SOLID BLOCK ROUND MANHOLE OR CATCH BASIN GREATER THAN 12'–0"
4.2.0	PRECAST 4'–0" ROUND MANHOLE
4.2.1	PRECAST 5'–0" ROUND MANHOLE
4.2.2	PRECAST 6'–0" ROUND MANHOLE
4.3.0 (SIZE)	PRECAST 4'–0" OR 6'–0" SQUARE MANHOLE OR CATCH BASIN
4.4.0 (DIA.)	PRECAST 4'–0", 5'–0", OR 6'–0" ROUND CATCH BASIN
4.5.0	PRECAST CONCRETE DROP INLET
4.5.1	PRECAST CONCRETE DROP INLET LATERAL OUTLET
4.5.2	PRECAST CONCRETE DROP INLET LONGITUDINAL OUTLET
5.3.0	CATCH BASIN AND MANHOLE STEP
5.4.0	CONCRETE COLLARS
6.1.0	LIGHT–DUTY SQUARE FRAME AND ROUND COVER
6.1.1	HEAVY DUTY SQUARE FRAME AND ROUND COVER
6.2.0	LIGHT–DUTY ROUND FRAME AND COVER
6.2.1	HEAVY–DUTY ROUND FRAME AND COVER
6.3.0	SQUARE FRAME AND GRATE
6.3.1	SQUARE FRAME AND GRATE
6.3.2	SQUARE FRAME AND GRATE (BICYCLE SAFE)
6.3.3	HIGH CAPACITY FRAME AND GRATE
6.3.4	HIGH CAPACITY FRAME AND GRATE (BICYCLE SAFE)
6.4.0	ROUND FRAME AND GRATE
7.1.0S	PRECAST CONCRETE CURB (STRAIGHT)
7.1.0C	PRECAST CONCRETE CURB (CIRCULAR)
7.1.1	3'–0' PRECAST CONCRETE TRANSITION CURB
7.1.2	6'–0" PRECAST CONCRETE TRANSITION CURB
7.1.4	PRECAST 2'–0" RADIUS CORNER
7.1.5	PRECAST CONCRETE INLET STONE (FOR SQUARE CATCH BASIN)
7.1.6	PRECAST CONCRETE INLET STONE (FOR ROUND CATCH BASIN)
7.1.7	PRECAST CONCRETE APRON STONE (FOR SQUARE CATCH BASIN)
7.1.8	PRECAST CONCRETE APRON STONE (FOR ROUND CATCH BASIN)
7.2.0S	PRECAST CONCRETE SLOPED FACE CURB (STRAIGHT)
7.2.0C	PRECAST CONCRETE SLOPED FACE CURB (CIRCULAR)
7.2.1	PRECAST CONCRETE SLOPED FACE TRANSITION CURB
7.2.2	PRECAST CONCRETE TRANSITION CURB (VERTICAL FACE TO SPLOPED FACE)
7.3.0S	GRANITE CURB (STRAIGHT)
7.3.0C	GRANITE CURB (CIRCULAR)
7.3.1	3'–0" GRANITE TRANSITION CURB
7.3.2	6'–0" GRANITE TRANSITION CURB
7.3.3	GRANITE WHEELCHAIR RAMP TRANSITION CURB
7.3.4	GRANITE 2'–0" RADIUS CORNER
7.3.5	GRANITE INLET STONE (FOR SQUARE CATCH BASIN)
7.3.6	GRANITE INLET STONE (FOR ROUND CATCH BASIN)
7.3.7	GRANITE APRON STONE (FOR SQUARE CATCH BASIN)
7.3.8	GRANITE APRON STONE (FOR ROUND CATCH BASIN)
7.4.0	GRANITE SLOPED FACE CURB
7.4.1	GRANITE SLOPED FACE TRANSITION CURB

7.4.2	GRANITE TRANSITION CURB (VERTICAL FACE TO SLOPE FACE)
7.5.0	BITUMINOUS CONCRETE LIP CURB
7.5.1A	BITUMINOUS BERM (CONSTRUCTION METHOD A)
7.5.1B	BITUMINOUS BERM (CONSTRUCTION METHOD B)
7.6.0	CURB SETTING DETAIL
8.2.0	BITUMINOUS CONCRETE DITCH
8.3.0	RIP–RAP DITCH
8.4.0	PAVED WATERWAY
9.1.0	BALED HAY EROSION CHECK
9.2.0	SILT FENCE DETAIL
9.3.0	BALED HAY DITCH EROSION CHECK AND SILT FENCE COMBINED
9.4.0	BALED HAY DITCH AND SWALE EROSION CHECK
9.5.0	LOG AND HAY CHECK DAM
9.7.0	DEWATERING BASIN
9.8.0	BALED HAY CATCH BASIN INLET PROTECTION
9.9.0	CONSTRUCTION ACCESS
10.1.0	WET STONE MASONRY RETAINING WALL
10.2.0	RUBBLE MASONRY WALL
10.3.0	CONCRETE RETAINING WALL
10.4.0	STONE MASONRY STEPS
14.1.0	CONCRETE HIGHWAY BOUND
15.1.0	POST AND MOUNTINGS FOR RURAL MAILBOX
15.2.0 (NO.)	POST AND MULTIPLE MOUNTINGS FOR RURAL MAILBOXES
18.2.0	PRECAST TYPE "A" HANDHOLE
18.2.2	HEAVY DUTY TYPE "H" HANDHOLE
18.3.0	ALUMINUM LIGHTING STANDARDS
20.2.0	BI–DIRECTIONAL CONTROL DEVICE
24.6.1	STREET SIGN MOUNTING DETAIL
26.2.0	POLYETHYLENE DRUM WITH MARKINGS
26.3.0	PVC PLASTIC PIPE TYPE III BARRICADE
31.1.0	CHAIN LINK FENCE 3'–0" TO 4'–0"
31.2.0	CHAIN LINK FENCE 5'–0" TO 6'–0"
31.2.1	CHAIN LINK FENCE 5'–0" TO 6'–0" INTERMEDIATE POST
31.3.0	WOVEN WIRE RIGHT–OF–WAY FENCE (STEEL POST)
34.1.0	TYPICAL GUARDRAIL INSTALLATION
34.2.0	STEEL BEAM GUARDRAIL
34.2.1	STEEL BEAM GUARDRAIL DETAILS
34.2.2	STEEL BEAM GUARDRAIL DOUBLE FACED ASSEMBLY
34.2.3	STEEL BEAM GUARDRAIL FIXTURES
34.2.5	STEEL BEAM GUARDRAIL REFLECTORIZED TRIANGULAR DELINEATOR
34.3.1	GUARDRAIL END SECTION
34.3.2	TERMINAL END SECTION (SINGLE FACE)
34.3.3	ANCHORAGE DETAILS APPROACH END SECTION
34.3.4	ANCHORAGE DETAILS TRAILING END SECTION
34.4.0	STEEL BACKED TIMBER GUARDRAIL
34.4.1	STEEL BACKED TIMBER GUARDRAIL TERMINAL SECTION–TYPE 1
40.1.0	DOUBLE–FACED PRECAST MEDIAN BARRIER
40.2.0	SINGLE–FACED PRECAST MEDIAN BARRIER
40.2.1	SINGLE–FACED PRECAST MEDIAN BARRIER
40.3.0	PRECAST MEDIAN BARRIER TRANSITION UNIT
40.5.0	PRECAST MEDIAN BARRIER FOR TEMPORARY TRAFFIC CONTROL
43.1.0	CEMENT CONCRETE SIDEWALK
43.2.0	BITUMINOUS CONCRETE SIDEWALK
43.3.0	WHEELCHAIR RAMP
43.3.1	WHEELCHAIR RAMP FOR LIMITED RIGHT–OF–WAY AREAS
43.4.0	DRIVEWAY DEVELOPMENT FOR 3'–0" TRANSITION CURB
43.4.1	DRIVEWAY DEVELOPMENT FOR 6'–0" TRANSITION CURB
43.5.0	CEMENT CONCRETE DRIVEWAYS
48.1.0	DETECTABLE WARNING SYSTEM
51.1.0	TREE PROTECTION DEVICE
51.1.1	DRIP LINE TREE PROTECTION DEVICE FOR EXISTING TREES
51.2.0	SHRUB PROTECTION DEVICE
51.3.0	TREE WELL
51.4.0	TREE WALL

AB	ADJUST CATCH BASIN TO GRADE
ABM	ADJUST CATCH BASIN TO MANHOLE
AC	ADJUST CURB STOP TO GRADE
AD	ADJUST DRAINAGE MANHOLE TO GRADE
AE	ADJUST ELECTRIC MANHOLE TO GRADE
AFC	ADJUST FRAME AND COVER TO GRADE
AFG	ADJUST FRAME AND GRATE TO GRADE
AG	ADJUST GAS GATE BOX TO GRADE
AHH	ADJUST HANDHOLE TO GRADE
AS	ADJUST SANITARY SEWER MANHOLE TO GRADE
AT	ADJUST TELEPHONE MANHOLE TO GRADE
AW	ADJUST WATER GATE BOX TO GRADE
BCD	BITUMINOUS CONCRETE DRIVEWAY 3" BITUMINOUS CONCRETE TYPE I–2 8" GRAVEL BORROW SUBBASE COURSE
BPS	BUILD NEW STRUCTURE OVER EXISTING PIPE
CCB	CLEAN CATCH BASIN
CCP	CUT AND CAP PIPE WITH RESTRAINT (ALL SIZES)
CFP	CLEAN AND FLUSH PIPE
CG	CLEARING AND GRUBBING
CMH	CLEAN MANHOLE
CP (DEPTH)	COLD PLANE
CPP	CUT AND PLUG PIPE (ALL TYPES, ALL SIZES)
DB	REMOVE AND DISPOSE BITUMINOUS CURB
DC	REMOVE AND DISPOSE CONCRETE CURB
DCB	REMOVE AND DISPOSE CATCH BASIN
DDI	REMOVE AND DISPOSE DROP INLET
DF	REMOVE AND DISPOSE FENCE
DFC	REMOVE AND DISPOSE FRAME AND COVER
DFE	REMOVE AND DISPOSE FLARED END SECTION
DFG	REMOVE AND DISPOSE FRAME AND GRATE
DFH	REMOVE AND DISPOSE FIRE HYDRANT
DFP	REMOVE AND DISPOSE FLEXIBLE PAVEMENT
DG	REMOVE AND DISPOSE GUARDRAIL
DH	REMOVE AND DISPOSE HEADWALL
DHB	REMOVE AND DISPOSE HIGHWAY BOUND
DHH	REMOVE AND DISPOSE HANDHOLE
DL	REMOVE AND DISPOSE LIGHT AND FOUNDATION
DMB	REMOVE AND DISPOSE MEDIAN BARRIER
DMH	REMOVE AND DISPOSE MANHOLE
DMM	REMOVE AND DISPOSE MEDIAN MARKER
DOW	REMOVE AND DISPOSE OBSERVATION WELL
DP	REMOVE AND DISPOSE PIPE
DPB	REMOVE AND DISPOSE PAVEMENT AND RIGID BASE
DRB	REMOVE AND DISPOSE RIGID BASE
DS	REMOVE AND DISPOSE SIGN
DSS	REMOVE AND DISPOSE TRAFFIC SIGNAL SYSTEM
DSW	REMOVE AND DISPOSE SIDEWALK
DTD	REMOVE AND DISPOSE TELEPHONE DUCT BANKS
DUP	REMOVE AND DISPOSE UTILITY POLE
DWW	REMOVE AND DISPOSE PAVED WATERWAY
FF	FILTER FABRIC RIPRAP FLARED END UNDERLAYMENT
GET	FLARED GUARDRAIL END TREATMENT
IA	IMPACT ATTENUATOR
IDL	IMPERVIOUS DITCH LINER
LOD	LIMIT OF DISTURBANCE
LOR	LIMIT OF REGRADING
LS	4" LOAM AND SEED

NFH	NEW FIRE HYDRANT WITH GATE VALVE
NIC	NOT IN THIS CONSTRUCTION CONTRACT
NWB	FURNISH AND INSTALL NEW WATER GATE VALVE BOX
NWVB	FURNISH AND INSTALL NEW WATER GATE VALVE AND BOX
NWCB	FURNISH AND INSTALL NEW WATER CURB STOP BOX
NWSB	FURNISH AND INSTALL NEW WATER CURB STOP AND BOX
PCD	PERMANENT CHECK DAM
PS	4" PLANTABLE SOIL AND SEED
RCB	RECONSTRUCT TYPE "D" CATCH BASIN, TO CATCH BASIN WITH GUTTER INLET
RCM	R.I.D.O.T. COMMUNICATIONS MANHOLE
RHH	REMOVE, HANDLE, HAUL, TRIM, RESET CURB EDGING, STRAIGHT, CIRCULAR (ALL TYPES)
RLP	RELOCATE LAMP POST
RMB	RELOCATE MAILBOX (BY OTHERS)
RPM	REMOVE PAVEMENT MARKINGS
RRP	RIP–RAP PAD (SEE DETAIL)
RRS	REMOVE AND RELOCATE SIGN
RUP	RELOCATE UTILITY POLE (BY OTHERS)
SB	STONE BAFFLE
SBAE	STEEL BEAM BRIDGE CONNECTION APPROACH END (W/O NESTED RAIL)
SBTE	STEEL BEAM BRIDGE CONNECTION TRAILING END (W/NESTED RAIL)
SD–	STRUCTURAL DISPOSITION – SEE CS PAGES OF SPECIFICATION
SF	REMOVE AND STOCKPILE FENCE
SGA	SPECIAL GRADED AGGREGATE
SGC	REMOVE AND STOCKPILE GRANITE CURB
SGR	REMOVE AND STOCKPILE GUARDRAIL
SH	REMOVE AND STOCKPILE HYDRANT
SS	REMOVE AND STOCKPILE SIGN
STS	REMOVE AND STOCKPILE TRAFFIC SIGNAL SYSTEM
TB	CONCRETE THRUST BLOCK
TEP	TIE EXISTING PIPE INTO NEW STRUCTURE
TNP	TIE NEW PIPE INTO EXISTING STRUCTURE
TBT	THRIE BEAM TRANSITION
TBBC	THRIE BEAM BRIDGE CONNECTION
TT	TREE TRIMMING
WCM	4" WOOD CHIP MULCH
4DY	4" EPOXY RESIN PAVEMENT MARKINGS – DOUBLE YELLOW
6W	6" EPOXY RESIN PAVEMENT MARKINGS – WHITE
12W	12" EPOXY RESIN PAVEMENT MARKINGS – WHITE
6WT	6" PREFORMED PATTERNED MARKING (HIGH PERFORMANCE TAPE)
4Y	4" EPOXY RESIN PAVEMENT MARKINGS – YELLOW
6Y	6" EPOXY RESIN PAVEMENT MARKINGS – YELLOW
P.G.L.	PROFILE GRADE LINE

WSP USA INC.
100 SUMMER STREET, 13TH FLOOR
BOSTON, MA. 02110
166 VALLEY STREET, BUILDING 5,
PROVIDENCE, RI 02909
WWW.WSP.COM

RHODE ISLAND PUBLIC TRANSIT AUTHORITY

RHODE ISLAND
PUBLIC TRANSIT AUTHORITY

REVISIONS			REVISIONS		
NO.	DATE	BY	NO.	DATE	BY

EAST SIDE TUNNEL REHABILITATION

PROVIDENCE RHODE ISLAND

STANDARD PLAN SYMBOLS & STANDARD LEGEND

DESIGNED BY: XXX
CHECKED BY: XXX
DATE: 06/30/2023
PLAN NO G–02
SHEET: 2 OF: 81

STDSYM.dwg

GENERAL NOTES:

1. ANY DAMAGE TO EXISTING PAVEMENT, CONDUIT, SIDEWALK, FENCES, ETC., CAUSED BY THE CONTRACTOR SHALL BE REPAIRED BY THE CONTRACTOR AT NO ADDITIONAL COST TO THE RIPTA.

2. THE CONTRACTOR SHALL PLACE ALL EQUIPMENT AND MATERIAL AS FAR AWAY AS POSSIBLE FROM THE EDGE OF THE TRAVEL LANE SO AS NOT TO CAUSE A SAFETY HAZARD, IN ACCORDANCE WITH SECTION 106.06 OF THE R.I.D.O.T. STANDARD SPECIFICATION, LATEST EDITION.

3. IT IS THE CONTRACTOR'S RESPONSIBILITY TO ENSURE THAT THE EXISTING CONDITIONS ARE NOT OBLITERATED BEFORE CONTROL POINTS ARE LOCATED AND CONSTRUCTION LAYOUT IS ESTABLISHED. THE CONSTRUCTION LAYOUT SHALL BE PROVIDED IN SUFFICIENT DETAIL, THEREBY ENABLING HIM TO CONSTRUCT THE PROJECT IN CONFORMITY WITH THE PLANS AND SPECIFICATIONS. SURVEY WILL BE PROVIDED BY THE CONTRACTOR. THE RESIDENT ENGINEER WILL NOT AUTHORIZE CONSTRUCTION ACTIVITIES TO BEGIN UNTIL HE IS SATISFIED THAT ALL GROUND CONTROL HAS BEEN ESTABLISHED, TIED DOWN, AND DULY RECORDED IN STANDARD FIELD BOOKS.

4. ALL SIDEWALK AND DRIVEWAYS DESIGNATED FOR REPLACEMENT SHALL BE CUT AND MATCHED AT LOCATIONS SHOWN ON THE PLANS OR AS DIRECTED BY THE ENGINEER.

5. ASPHALT EMULSION TACK COAT SHALL BE PLACED PRIOR TO PAVEMENT PLACEMENT ON THE CONCRETE BASE OR COLD PLANED PAVEMENT, AND ON ANY NEW COURSE WHICH HAS BEEN OPEN TO TRAFFIC, OR ANY NEW COURSE WHICH HAS BEEN EXPOSED FOR MORE THAN 3 DAYS, AND/OR AS DIRECTED BY THE ENGINEER. IT SHALL ALSO BE APPLIED TO VERTICAL PAVEMENT FACES BETWEEN ADJOINING PAVEMENT SECTIONS. ALL APPLICATIONS ON BOTH HORIZONTAL AND VERTICAL SURFACES SHALL BE PAID FOR UNDER THE CONTRACT UNIT BID PRICE FOR CODE 403.0300 "ASPHALT EMULSION TACK COAT."

6. CLEANING AND SWEEPING OF PAVEMENT WILL INCLUDE REMOVAL OF ALL PAVEMENT DEBRIS PRIOR TO THE PLACEMENT OF EACH BITUMINOUS PAVEMENT LIFT. ALL CLEANING AND SWEEPING SHALL BE DONE TO THE SATISFACTION OF THE ENGINEER.

7. PRIOR TO INSTALLATION, ALL SIGNS, MOUNTINGS AND LOCATIONS SHALL BE APPROVED OR MODIFIED BY THE ENGINEER.

8. THE COORDINATE SYSTEM IS THE R.I. STANDARD GRID SYSTEM, NAD 83. THE VERTICAL CONTROL IS NAVD88.

9. PAVEMENT OPERATIONS FOR CURBED SECTIONS: IN AREAS WHERE CURBING IS SET TO FINISH LINE AND GRADE, THE CONTRACTOR WILL NOT BE REQUIRED TO UTILIZE THE SENSOR AND SKY–TYPE DEVICE FOR AUTOMATIC GRADE CONTROL, BUT WILL BE ALLOWED TO MANUALLY ADJUST THE BITUMINOUS PAVER FOR CONTROLLING GRADE.

10. THE CONTRACTOR SHALL BE RESPONSIBLE FOR MAINTAINING ALL ROADWAYS FREE OF DEBRIS RESULTING FROM THEIR CONSTRUCTION OPERATIONS. ALL DEBRIS SHALL BE REMOVED TO THE SATISFACTION OF THE ENGINEER AT NO ADDITIONAL COST TO THE STATE.

11. NO FUEL STORAGE, VEHICLE REFUELING, OR EQUIPMENT STORAGE SHALL TAKE PLACE IN DESIGNATED WETLANDS, NOR WITHIN 100' OF ANY WATER BODY. THIS REQUIREMENT SHALL NOT SUPERSEDE ANY FEDERAL, STATE OR LOCAL LAW, ORDINANCE, RULE OR REGULATION THAT APPLIES TO THE SAME, UNLESS THIS REQUIREMENT IS MORE STRINGENT THAN SAID LAW, ORDINANCE, RULE OR REGULATION.

12. THE CONTRACTOR SHALL BE RESPONSIBLE TO ENSURE THAT AT THE END OF FINAL PAVING OPERATIONS, FLOW TO EXISTING DRAINAGE STRUCTURES HAS BEEN REESTABLISHED AND THAT NO ISOLATED DEPRESSIONS REMAIN. THERE SHALL BE NO SEPARATE PAYMENT FOR THIS PROVISION; IT SHALL BE CONSIDERED INCIDENTAL TO PAVING AND COLD PLANING OPERATIONS.

13. THE CONTRACTOR SHALL READ, BECOME FAMILIAR WITH, AND ADHERE TO ALL OF THE PROVISIONS, CONDITIONS, AND STIPULATIONS STATED IN THE ENVIRONMENTAL APPROVALS ISSUED FOR THE PROJECT FROM THE DEPARTMENT OF ENVIRONMENTAL MANAGEMENT (RIDEM). AND/OR THE ARMY CORPS OF ENGINEERS (ACOE). AND/OR THE COASTAL RESOURCES MANAGEMENT COUNCIL (CRMC).

14. FOR ALL PROJECTS INVOLVING KNOWN SITE REMEDIATION ISSUES, THE CONTRACTOR SHALL READ, BECOME FAMILIAR WITH, AND ADHERE TO ALL OF THE CONSTRUCTION RELATED PROVISIONS, CONDITIONS, AND STIPULATIONS OF ANY REMEDIAL PLANS DEVELOPED FOR THE PROJECT. COPIES OF THESE DOCUMENTS ARE INCLUDED IN THE CS PAGES OF THE CONTRACT DOCUMENTS. ALL COSTS ASSOCIATED WITH COMPLIANCE WITH THESE DOCUMENTS SHALL BE CONSIDERED INCIDENTAL TO THE CONSTRUCTION AND INCLUDED WITH THE COST FOR THE ASSOCIATED BID ITEM(S).

15. NO UNPROTECTED CONSTRUCTED FEATURE MAY PROJECT MORE THAN 4 INCHES ABOVE THE FINISHED GRADE OF A TRAVERSABLE SLOPE IN A CLEAR ZONE, e.g. HEADWALL, DRAINAGE INLET, ETC.

16. THE REMAINING SECTION OR STUB OF A BREAKAWAY BASE MAY NOT PROJECT MORE THAN 4 INCHES ABOVE THE FINISHED GRADE OF A TRAVERSABLE SLOPE IN A CLEAR ZONE, e.g. SIGN POSTS, LIGHT POLES, FIRE HYDRANTS, ETC.

DRAINAGE AND EROSION CONTROL NOTES:

1. STOCKPILES OF MATERIAL SHALL NOT BE LOCATED WITHIN REGULATED WETLANDS OR BUFFER ZONE AREAS. THEY SHALL HAVE SIDE SLOPES NO GREATER THAN 30% AND STOCKPILES OF ERODABLE MATERIAL SHALL ALSO BE SEEDED AND RINGED WITH R.I. STD. 9.1.0 TO STABILIZE.

2. IF THE PLANS INCLUDE SPECIFIC AREAS FOR PLACEMENT OF CONSTRUCTION DEWATERING BASINS AND/OR EQUIPMENT AND MATERIALS STORAGE AND STOCKPILING, AND IF THE CONTRACTOR ELECTS TO UTILIZE ANY OTHER AREAS FOR THESE PURPOSES, THIS SHALL BE APPROVED BY THE ENGINEER ONLY AFTER OBTAINING ANY NECESSARY PERMITS AND/OR PERMIT MODIFICATIONS FROM THE APPROPRIATE REGULATORY AUTHORITY(IES). ANY PERMITTING REQUIREMENTS SHALL BE THE RESPONSIBILITY OF THE CONTRACTOR AND SHALL BE ACCOMPLISHED AT NO COST TO THE STATE. THE ENGINEER WILL COORDINATE SUBMISSION OF ANY REQUIRED PERMIT APPLICATION MATERIALS WITH THE R.I.D.O.T. OFFICE OF ENVIRONMENTAL PROGRAMS.

3. PRIOR TO DRAINAGE AND UTILITY CONSTRUCTION, THE CONTRACTOR IS RESPONSIBLE FOR VERIFYING THE LOCATION (HORIZONTAL AND VERTICAL) OF ALL EXISTING PIPES AND/OR STRUCTURES WHICH ARE TO BE CONNECTED. ANY VARIATION FOUND FROM THE PLANS MUST BE BROUGHT TO THE ENGINEER'S ATTENTION PRIOR TO DRAINAGE AND UTILITY CONSTRUCTION. WORK CAN COMMENCE ONLY UPON THE ENGINEER'S AUTHORIZATION.

4. ALL DRAINAGE AND UTILITY STRUCTURES WITHIN THE PAVED ROADWAY SHALL BE ADJUSTED TO GRADE WITH THE SURROUNDING PAVEMENT PRIOR TO THE WINTER SHUTDOWN.

5. DURING CONSTRUCTION, THE CONTRACTOR SHALL BE RESPONSIBLE FOR MAINTAINING DRAINAGE AND RUNOFF FLOW DURING STORMS AND PERIODS OF RAINFALL THROUGHOUT THE WORK AREA.

6. CATCH BASIN RIM GRADES NOTED ON PLANS ARE DEPRESSED 0.1' LOWER THAN THE GUTTER GRADE. RIM ELEVATIONS SHOWN ARE FINAL GRADES. THE CONTRACTOR SHALL PLACE FRAMES AND GRATES 0.1' BELOW THE GRADE CONSTRUCTED IN THIS CONTRACT OR AS DIRECTED BY THE ENGINEER.

7. THE CONTRACTOR SHALL INSTALL ALL EROSION CONTROL DEVICES FOR OUTLET PROTECTION PRIOR TO CLEANING AND FLUSHING STORM WATER DRAINAGE. EROSION CONTROL DEVICES SHALL REMAIN IN PLACE UNTIL ALL FLUSHED SEDIMENTS ARE REMOVED. AT ALL OUTFALL LOCATIONS WHERE PIPES ARE TO BE CLEANED AND FLUSHED, OUTLET PROTECTION (R.I. STD. 9.1.0 OR 9.3.0) SHALL BE INSTALLED TO TRAP SEDIMENTS. THESE SEDIMENTS SHALL THEN BE REMOVED AND DISPOSED OF LEGALLY BEFORE THE OUTLET PROTECTION DEVICES ARE REMOVED. IF OUTLET PROTECTION AT THE OUTFALL IS NOT FEASIBLE, THEN THE OUTLET PIPE OF THE LAST DRAINAGE STRUCTURE TO BE CLEANED SHALL BE PLUGGED TO CAPTURE ALL MATERIALS FLUSHED FROM PIPES. AFTER THE MATERIALS ARE REMOVED FROM THE DRAINAGE STRUCTURE, THE OUTLET SHALL BE UNPLUGGED TO RESUME NORMAL FUNCTIONING.

8. R.I. STD. 9.8.0 BALED HAY INLET PROTECTION SHALL BE INSTALLED AT ALL CATCH BASINS AND INLETS WHENEVER SUBBASE IS EXPOSED, AND SHALL REMAIN IN PLACE UNTIL THE ABUTTING GROUND SURFACES ARE STABILIZED.

9. WHERE BALED HAY INLET PROTECTION AND SILT FENCES ARE USED AT CATCH BASINS, THEY SHALL BE REMOVED AT THE END OF THE PROJECT OR AS DIRECTED BY THE ENGINEER IN ORDER TO PREVENT CLOGGING OF THE INLET.

UTILITY NOTES:

1. EXISTING UTILITIES HAVE BEEN SHOWN ON THE PLANS USING THE BEST AVAILABLE INFORMATION AND ARE APPROXIMATE. BUILDING SERVICE CONNECTIONS (ELECTRIC, GAS, TELEPHONE, WATER AND SANITARY) ARE NOT SHOWN. CONTRACTOR IS TO ASSUME SERVICES ARE PRESENT TO ALL BUILDINGS.

2. THE CONTRACTOR SHALL VERIFY THE LOCATIONS OF ALL EXISTING DRAINAGE AND UTILITIES BOTH UNDERGROUND AND OVERHEAD BEFORE EXCAVATION BEGINS IN ACCORDANCE WITH CHAPTER 39–1.2 OF THE R.I. GENERAL LAWS ENTITLED "EXCAVATION NEAR UNDERGROUND UTILITY FACILITIES", WITH AMENDMENTS EFFECTIVE AS OF NOVEMBER 1, 2009 AND, WHEN NECESSARY, BY CONTACTING THE INDIVIDUAL UTILITY COMPANIES. EXCAVATION SHALL BE IN ACCORDANCE WITH ALL STATUTES, ORDINANCES, RULES AND REGULATIONS OF ANY APPLICABLE CITY, TOWN, STATE OR FEDERAL AGENCY. THE CONTRACTOR SHOULD UNDERSTAND THAT NOT ALL UTILITIES SUBSCRIBE TO THE DIG SAFE PROGRAM. IT IS THE CONTRACTOR'S RESPONSIBILITY TO NOTIFY ALL UTILITY COMPANIES AND ENSURE THAT ALL UTILITIES HAVE BEEN MARKED PRIOR TO COMMENCING THEIR WORK. ANY DAMAGE TO EXISTING UTILITIES MARKED IN THE FIELD, OR AS A RESULT OF FAILING TO CONTACT THE APPROPRIATE UTILITY COMPANY, SHALL BE REPAIRED OR REPLACED AT NO ADDITIONAL COST TO THE STATE.

3. ALL EXISTING UTILITIES TO BE ABANDONED SHALL BE CAPPED.

4. EXISTING WATER SERVICES SHALL BE RECONNECTED TO THE NEW WATER MAINS.

5. UTILITY SERVICE CONNECTIONS SHALL BE MAINTAINED TO ALL EXISTING FACILITIES TO REMAIN.

6. FIRE HYDRANTS SHALL NOT BE REMOVED FROM SERVICE WITHOUT WRITTEN AUTHORIZATION FROM THE FIRE DEPARTMENT OR THE WATER AUTHORITY.

7. ALL NEW WATER LINES SHALL BE DISINFECTED TO THE SATISFACTION OF THE WATER AUTHORITY IN ACCORDANCE WITH THE SPECIFICATIONS.

MAINTENANCE AND PROTECTION OF TRAFFIC NOTES:

1. ALL MAINTENANCE AND PROTECTION OF TRAFFIC CONTROL SETUPS, SIGNS, CHANNELIZING DEVICES, ETC., SHALL BE IN ACCORDANCE WITH THE MANUAL ON UNIFORM TRAFFIC CONTROL DEVICES, LATEST EDITION.

2. ALL SIGN MOUNTINGS FOR TEMPORARY AND CONSTRUCTION SIGNS SHALL BE IN ACCORDANCE WITH THE R.I.D.O.T. STANDARD SPECIFICATIONS, LATEST EDITION.

3. THE CONTRACTOR SHALL COVER ALL EXISTING AND/OR TEMPORARY SIGNS THAT ARE NOT RELEVANT TO THE TRAFFIC CONTROL REQUIRED DURING ANY PARTICULAR STAGE OF THE CONTRACT.

4. ADVANCE FLAGPERSON SIGNS (W20–7A) SHALL BE USED IN ADVANCE OF ANY POINT AT WHICH A FLAGPERSON OR A POLICE OFFICER HAS BEEN STATIONED TO CONTROL TRAFFIC. WHEN NEEDED, AN APPROPRIATE DISTANCE MESSAGE MAY BE DISPLAYED ON A SUPPLEMENTAL PLATE (24"x18") BELOW THE FLAGPERSON SYMBOL SIGN. THE SIGN SHALL BE PROMPTLY REMOVED OR COVERED WHENEVER THE FLAGPERSON IS NOT AT THE STATION.

5. POLICE OFFICERS (AND <u>NOT</u> FLAGPERSONS) SHALL BE UTILIZED WHEN WORK WILL IMPACT SIGNALIZED INTERSECTIONS AND LIMITED ACCESS HIGHWAYS.

6. POLYETHYLENE DRUMS SHALL BE UTILIZED AS A CHANNELIZING DEVICE WHEN A TRAFFIC CONTROL SET–UP IS TO REMAIN BEYOND WORKING HOURS WHEN NO WORKERS ARE PRESENT. CONES SHALL BE UTILIZED WHEN A TRAFFIC CONTROL SET–UP IS TO REMAIN ONLY DURING WORKING HOURS AND IS SUBSEQUENTLY BROKEN DOWN AT THE END OF THE WORKDAY.

7. ARROW PANELS SHALL BE SET IN THE FLASHING FOUR CORNERS CAUTION MODE UNLESS UTILIZED FOR A MERGING TAPER. ARROW PANELS SET IN THE FLASHING ARROW MODE SHALL <u>NOT</u> BE UTILIZED FOR LANE SHIFTS.

8. TEMPORARY CONSTRUCTION SIGNS AND OTHER WORKZONE TRAFFIC CONTROL DEVICES THAT ARE DAMAGED OR REQUIRE RELOCATION SHALL BE REPLACED AND / OR RELOCATED UNDER THE PAY ITEM FOR "MAINTENANCE AND MOVEMENT TRAFFIC PROTECTION."

9. THE PRIVATE VEHICLES OF CONSTRUCTION WORKERS SHALL NOT BE PARKED ON THE TRAVEL LANES OR SHOULDERS. THEY MAY BE PARKED WITHIN THE STATE RIGHT–OF–WAY ONLY IN AREAS 30' BEYOND THE OUTSIDE EDGE OF THE TRAVEL LANES AND/OR IN AREAS APPROVED BY THE ENGINEER.

10. TEMPORARY CONSTRUCTION SIGNS AND OTHER TEMPORARY TRAFFIC CONTROL DEVICES SHALL BE INSTALLED PRIOR TO THE START OF WORK IN ANY AREA OPEN TO TRAFFIC, AND SHALL BE REMOVED AS SOON AS PRACTICAL WHEN THEY ARE NO LONGER APPROPRIATE.

11. THE INTENDED VEHICLE PATHS THROUGH EACH WORK ZONE SHALL BE CLEARLY MARKED AT ALL TIMES. WATERBORNE PAVEMENT MARKINGS SHALL BE INSTALLED BEFORE THE END OF THE WORK SHIFT ON ALL COLD–PLANED AND NEW ROADWAY SURFACES THAT WILL BE OPENED TO TRAFFIC AT THE END OF THE SHIFT.

STRUCTURAL NOTES:

1. ALL WORK SHALL BE IN ACCORDANCE WITH THE RHODE ISLAND DEPARTMENT OF TRANSPORTATION (RIDOT) STANDARD SPECIFICIATIONS FOR ROAD AND BRIDGE CONSTRUCTION AND THE CONTRACT DOCUMENTS.

2. THE STRUCTURAL DRAWINGS HAVE BEEN PREPARED ON THE BASIS OF HISTORICAL REPORTS, RECORD DRAWINGS, AND THE TUNNEL INSPECTION REPORT OF 2021.

3. ALL EXISTING CONDITIONS SHOWN ON THE DRAWINGS SHALL BE VERIFIED IN THE FIELD BY THE CONTRACTOR PRIOR TO THE PREPARATION OF WORKING OR SHOP DRAWINGS AND THE COMMENCEMENT OF ANY WORK.

4. THE LOCATION AND EXTENT OF EXISTING STRUCTURAL DEFECT AS SHOWN ON THE DRAWINGS ARE BASED ON THE VISUAL INSPECTION REPORT OF 2021.

5. THE CONTRACTOR IS TO:
   - PREPARE AND SUBMIT THE LOCATION AND TYPE OF DEFECTS FOR THE ENGINEER'S APPROVAL BEFORE PROCEEDING WITH THE REPAIR WORK.
   - VERIFY TOTAL REPAIR QUANTITY SHOWN ON THE DRAWINGS. ANY PROPOSED CHANGES SHALL BE REVIEWED BY RIPTA AND ARCHITECT BEFORE PROCEEDING WITH THE REPAIR WORK.
   - PERFORM THE REPAIRS USING THE TYPICAL DETAILS AS SHOWN ON THE CONTRACT DRAWINGS AND IN ACCORDANCE WITH THE SPECIFICATION.

6. ANY PORTION OF EXISTING WORK DAMAGED DURING THE CONSTRUCTION SHALL BE RESTORED TO A CONDITION AS GOOD AS BEFORE THE COMMENCEMENT OF THE WORK BY THE CONTRACTOR AT NO ADDITIONAL COST TO RIPTA

7. THE EXISTING STRUCTURE SHALL BE PROTECTED, MAINTAINED AND SUPPORTED DURING THE CONSTRUCTION WORK, IF REQUIRED.

8. BRICK MASONRY REPAIR SCOPE IS SHOWN ON THE STRUCTURAL DRAWINGS.

KEY PLAN
N.T.S.

DEFECT LEGEND
CRACKS:
DRY
WET*
SPALLING
SPALL W/ EXPOSED REBAR
DELAMINATION

*WET CRACKS ARE DEFINED AS CRACKS OBSERVED TO HAVE ACTIVE LEAKAGE, EFFLORESCENCE, AND/OR A GLISTENING SURFACE

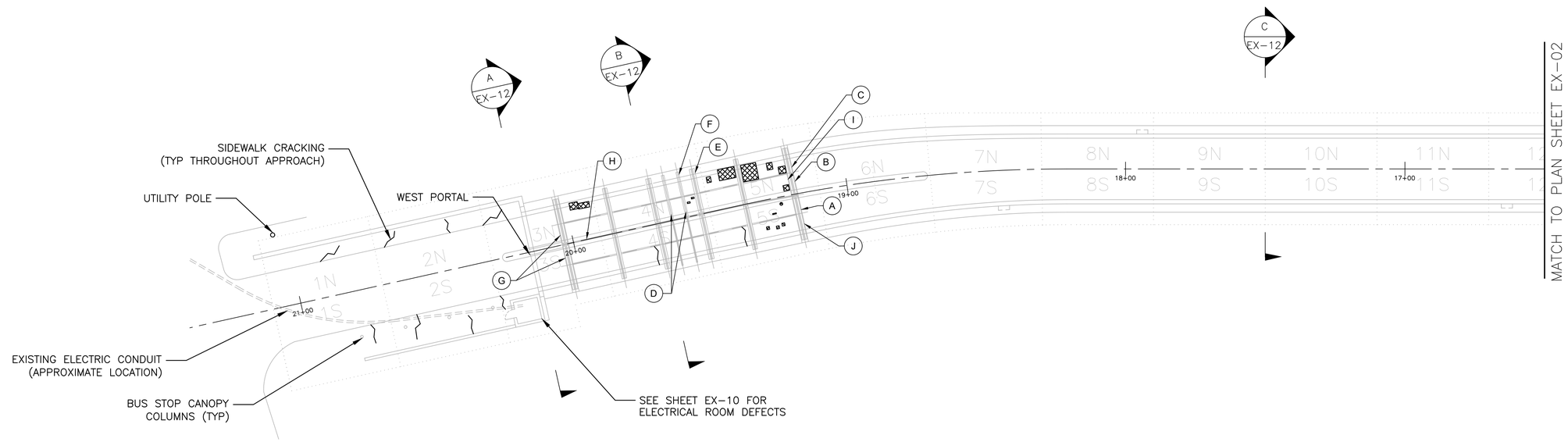

DETERIORATION NOTES:

(A) EAST GIRDER F @ E. ELEV OF WEB w/ 7' L x FH SECTION LOSS (SL) WITH PITS UP TO $\frac{1}{4}$" $\frac{3}{16}$" D

(B) EAST GIRDER F @ E. ELEV. OF WEB w/ 8' L x UP TO $\frac{1}{4}$" D ($\frac{1}{8}$" AVG) SL @ TOP AND BOTTOM EF N OF STR B BF SL, 20"L x DOWN TO $\frac{1}{8}$" REM

(C) EAST GIRDER F @ E. ELEV OF BF w/ 2' L SL – TAPERS FROM $\frac{5}{8}$" REMAINING @ WEB TO $\frac{5}{16}$" REMAINING AT TOE

(D) GIRDER CA & CB TWO OPEN DRILL HOLES FOR THROUGH ROD

(E) GIRDER 2" L x FH x $\frac{3}{4}$" D WF OVER

(F) EF CB WEB HOLE FH x 2" L W ADT SL LINE WEB 5"Lx2"Hx$\frac{1}{4}$"D WEB BOWED $\frac{1}{4}$" TO EAST

(G) WEST GIRDER 8F w/ FL x FW x UP TO $\frac{1}{16}$" DP SL w/ HEAVY LAMINATE RUST

(H) STRINGERS @ 8 ELEV CONNECTION TO 4"D UNDER w/ FH x $\frac{1}{4}$" WIDE GAP

(I) ACTIVE LEAKAGE PENETRATING BETWEEN GIRDER AND DECK WITH STALACTITES

(J) E. GIRDER F @ E ELEV 01 w/ FL x FW x $\frac{1}{8}$" REM

SHEET NOTES:

1. SEE SHEET G-03 FOR STRUCTURAL NOTES.
2. SEE SHEETS EX-05 TO EX-08 FOR DEFECTS IN TUNNEL ARCH AND SIDEWALLS.

WSP USA INC.
100 SUMMER STREET, 13TH FLOOR
BOSTON, MA. 02110
166 VALLEY STREET, BUILDING 5,
PROVIDENCE, RI 02909
WWW.WSP.COM

RHODE ISLAND PUBLIC TRANSIT AUTHORITY

RHODE ISLAND
PUBLIC TRANSIT AUTHORITY

SCALE: 1"=20'
GRAPHIC SCALE

REVISIONS			REVISIONS		
NO.	DATE	BY	NO.	DATE	BY

EAST SIDE TUNNEL REHABILITATION
PROVIDENCE RHODE ISLAND
EXISTING TUNNEL PLAN 1

DESIGNED BY: HPM
CHECKED BY: SCQ
DATE: 06/30/2023
PLAN NO.: EX-01
SHEET: 4 OF: 81

TGENERAL001.dwg

KEY PLAN
N.T.S.

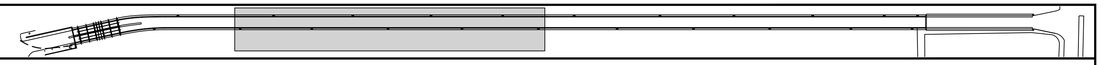

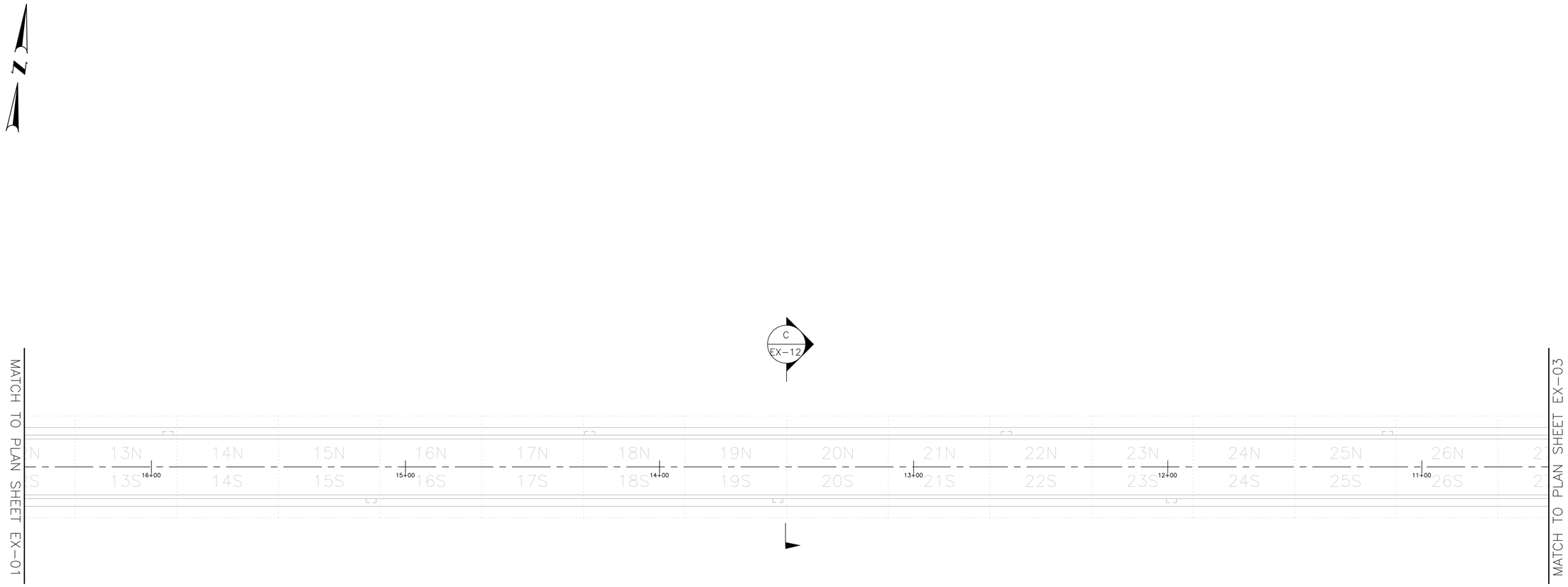

SHEET NOTES:

1. SEE SHEETS EX-05 TO EX-08 FOR DEFECTS IN TUNNEL ARCH AND SIDEWALLS.

WSP USA INC.
100 SUMMER STREET, 13TH FLOOR
BOSTON, MA. 02110
166 VALLEY STREET, BUILDING 5,
PROVIDENCE, RI 02909
WWW.WSP.COM

RHODE ISLAND PUBLIC TRANSIT AUTHORITY

RHODE ISLAND
PUBLIC TRANSIT AUTHORITY

SCALE: 1"=20'
GRAPHIC SCALE

REVISIONS			REVISIONS		
NO.	DATE	BY	NO.	DATE	BY

EAST SIDE TUNNEL REHABILITATION

PROVIDENCE RHODE ISLAND

EXISTING TUNNEL PLAN 2

DESIGNED BY: HPM
CHECKED BY: SCQ
DATE: 06/30/2023
PLAN NO.: EX-02
SHEET: 5 OF: 81

TGENERAL002.dwg

KEY PLAN
N.T.S.

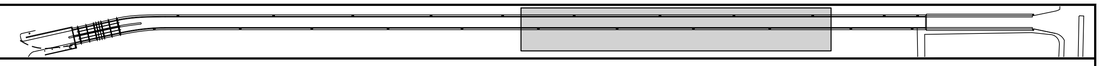

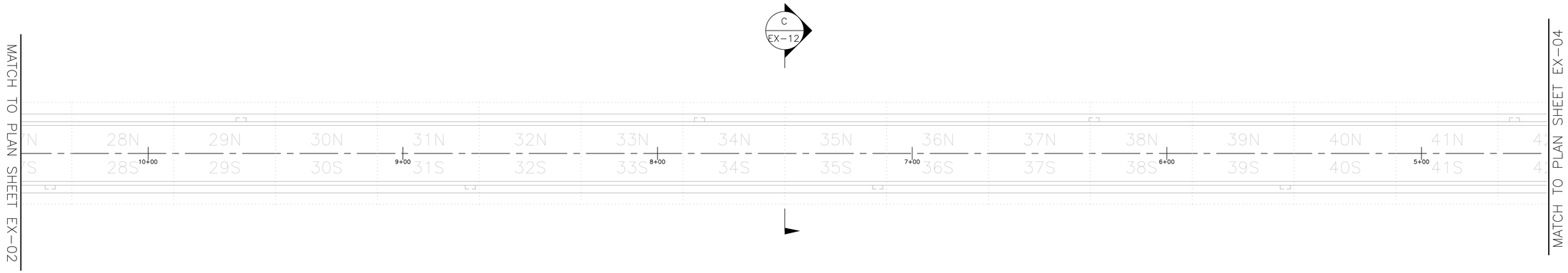

SHEET NOTES:

1. SEE SHEET G-03 FOR STRUCTURAL NOTES.
2. SEE SHEETS EX-05 TO EX-08 FOR DEFECTS IN TUNNEL ARCH AND SIDEWALLS.

WSP USA INC.
100 SUMMER STREET, 13TH FLOOR
BOSTON, MA. 02110
166 VALLEY STREET, BUILDING 5,
PROVIDENCE, RI 02909
WWW.WSP.COM

RHODE ISLAND PUBLIC TRANSIT AUTHORITY

RHODE ISLAND
PUBLIC TRANSIT AUTHORITY

SCALE: 1"=20'
GRAPHIC SCALE

REVISIONS			REVISIONS		
NO.	DATE	BY	NO.	DATE	BY

EAST SIDE TUNNEL REHABILITATION

PROVIDENCE RHODE ISLAND

EXISTING TUNNEL PLAN 3

DESIGNED BY: HPM
CHECKED BY: SCQ
DATE: 06/30/2023
PLAN NO.: EX-03
SHEET: 6 OF: 81

TGENERAL003.dwg

KEY PLAN
N.T.S.

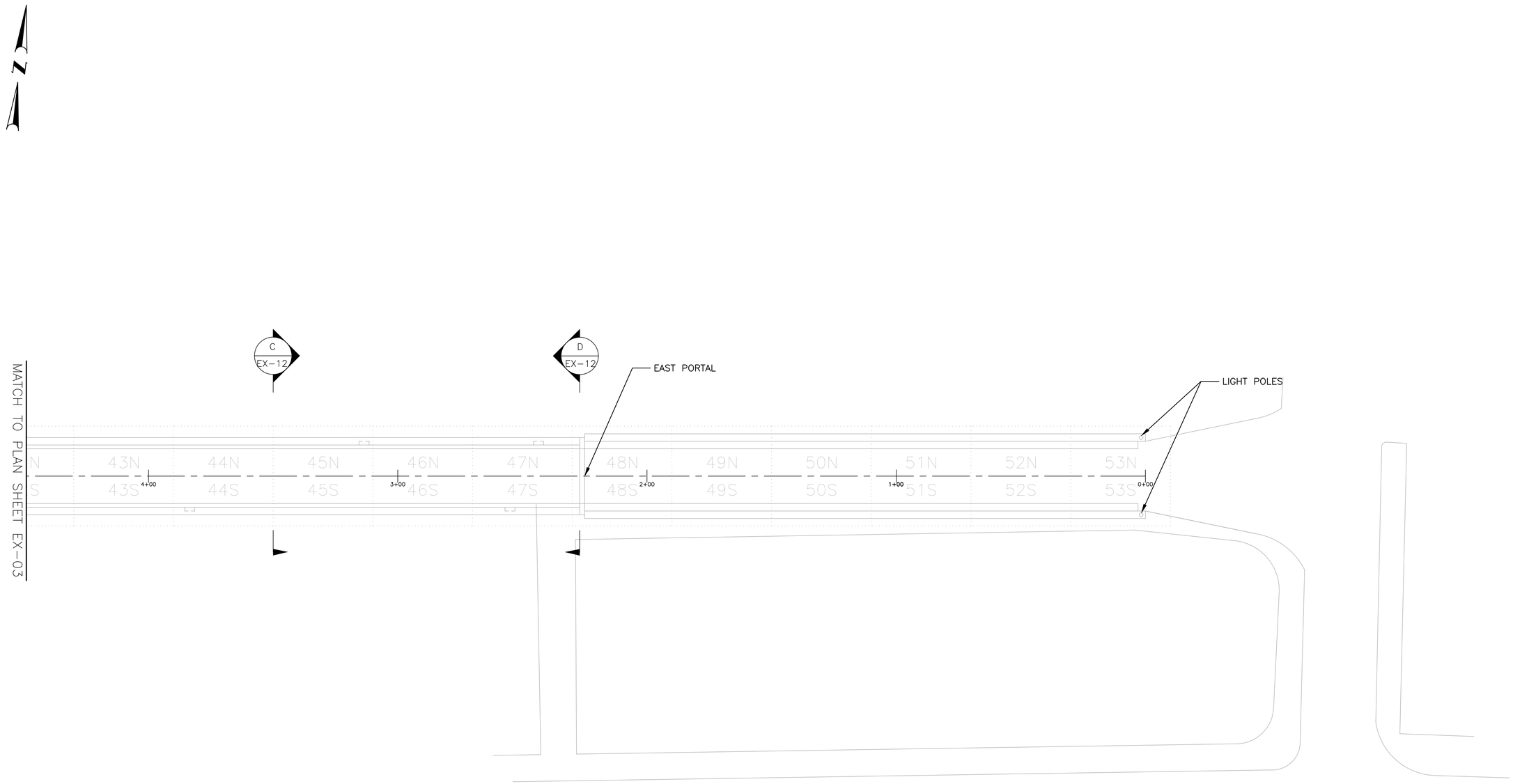

SHEET NOTES:

1. SEE SHEET G-03 FOR STRUCTURAL NOTES.
2. SEE SHEETS EX-05 TO EX-08 FOR DEFECTS IN APPROACH WINGWALLS AND TUNNEL ARCH AND SIDEWALLS.

WSP USA INC.
100 SUMMER STREET, 13TH FLOOR
BOSTON, MA. 02110
166 VALLEY STREET, BUILDING 5,
PROVIDENCE, RI 02909
WWW.WSP.COM

RHODE ISLAND PUBLIC TRANSIT AUTHORITY

RHODE ISLAND
PUBLIC TRANSIT AUTHORITY

SCALE: 1"=20'
GRAPHIC SCALE

REVISIONS			REVISIONS		
NO.	DATE	BY	NO.	DATE	BY

EAST SIDE TUNNEL REHABILITATION

PROVIDENCE RHODE ISLAND

EXISTING TUNNEL PLAN 4

DESIGNED BY: HPM
CHECKED BY: SCQ
DATE: 06/30/2023
PLAN NO.: EX-04
SHEET: 7 OF: 81

TGENERAL004.dwg

SHEET NOTES:

1. SEE SHEET G-03 FOR STRUCTURAL NOTES.

KEY PLAN
N.T.S.

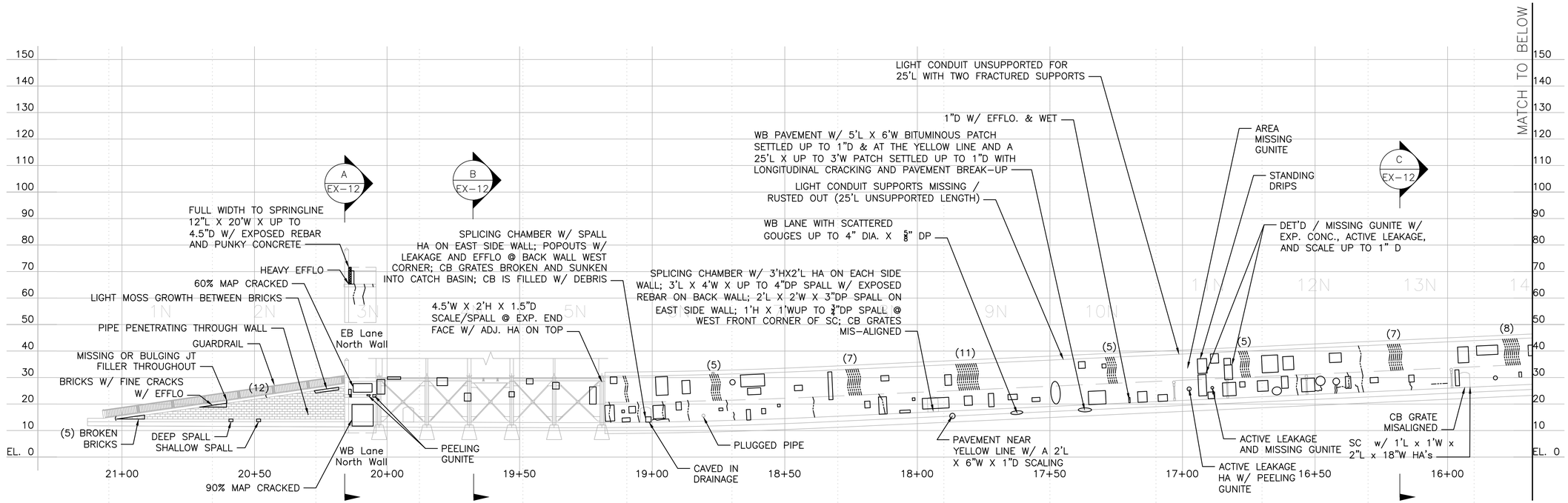

DEFECT LEGEND
CRACKS:
DRY
WET*
SPALLING
SPALL W/ EXPOSED REBAR
DELAMINATION

*WET CRACKS ARE DEFINED AS CRACKS OBSERVED TO HAVE ACTIVE LEAKAGE, EFFLORESCENCE, AND/OR A GLISTENING SURFACE

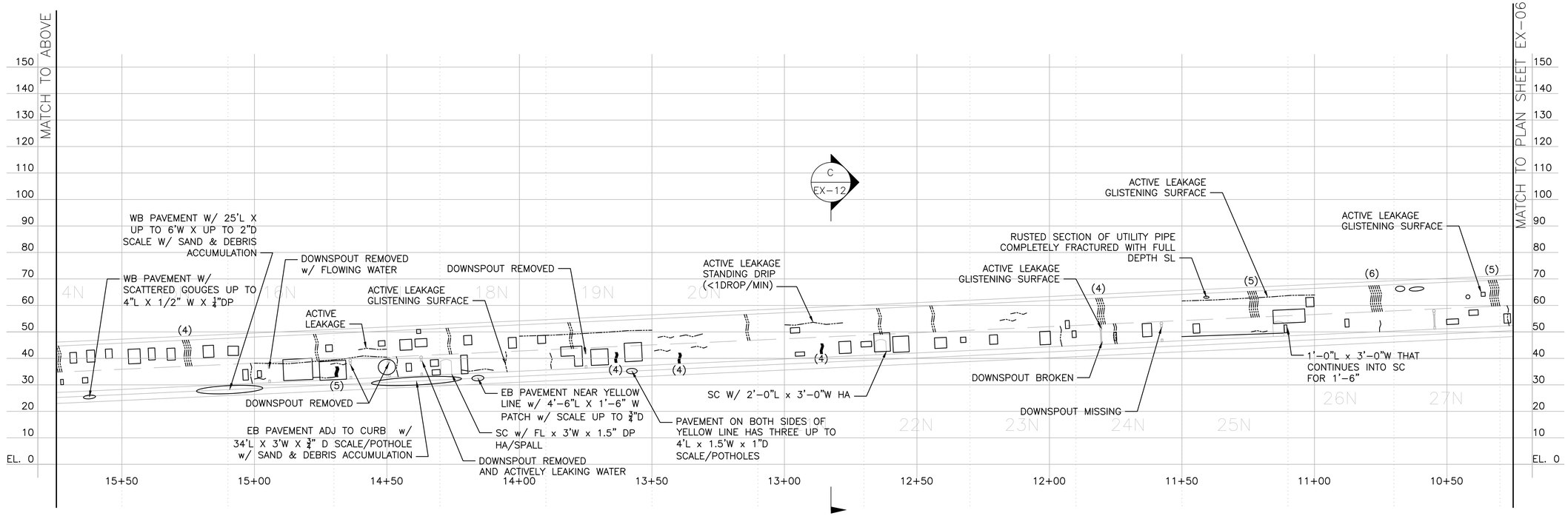

WSP USA INC.
100 SUMMER STREET, 13TH FLOOR
BOSTON, MA. 02110
166 VALLEY STREET, BUILDING 5,
PROVIDENCE, RI 02909
WWW.WSP.COM

RHODE ISLAND PUBLIC TRANSIT AUTHORITY

RHODE ISLAND
PUBLIC TRANSIT AUTHORITY

SCALE: 1"=20'
GRAPHIC SCALE

REVISIONS			REVISIONS		
NO.	DATE	BY	NO.	DATE	BY

EAST SIDE TUNNEL REHABILITATION

PROVIDENCE RHODE ISLAND

EXISTING ELEVATION 1 - LOOKING NORTH

DESIGNED BY: HPM
CHECKED BY: SCQ
DATE: 06/30/2023
PLAN NO.: EX-05
SHEET: 8 OF: 81

TPROFILE001.dwg

SHEET NOTES:

1. SEE SHEET G-03 FOR STRUCTURAL NOTES.

KEY PLAN
N.T.S.

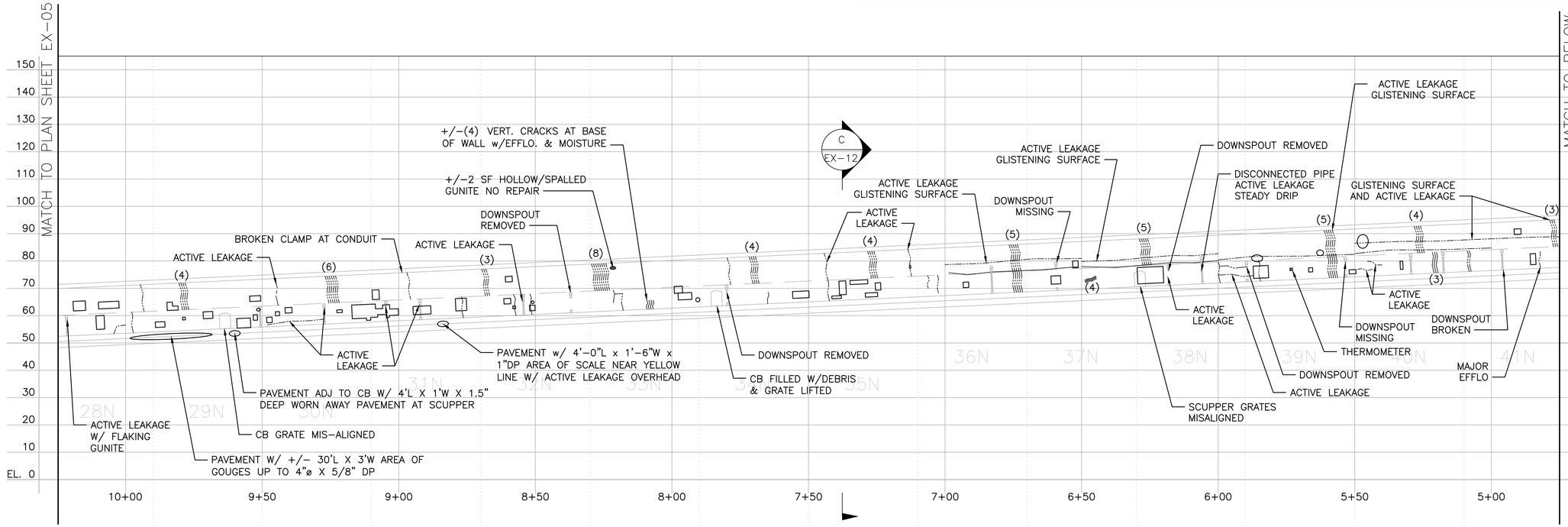

DEFECT LEGEND

CRACKS:
DRY
WET*

SPALLING

SPALL W/ EXPOSED REBAR

DELAMINATION

*WET CRACKS ARE DEFINED AS CRACKS OBSERVED TO HAVE ACTIVE LEAKAGE, EFFLORESCENCE, AND/OR A GLISTENING SURFACE

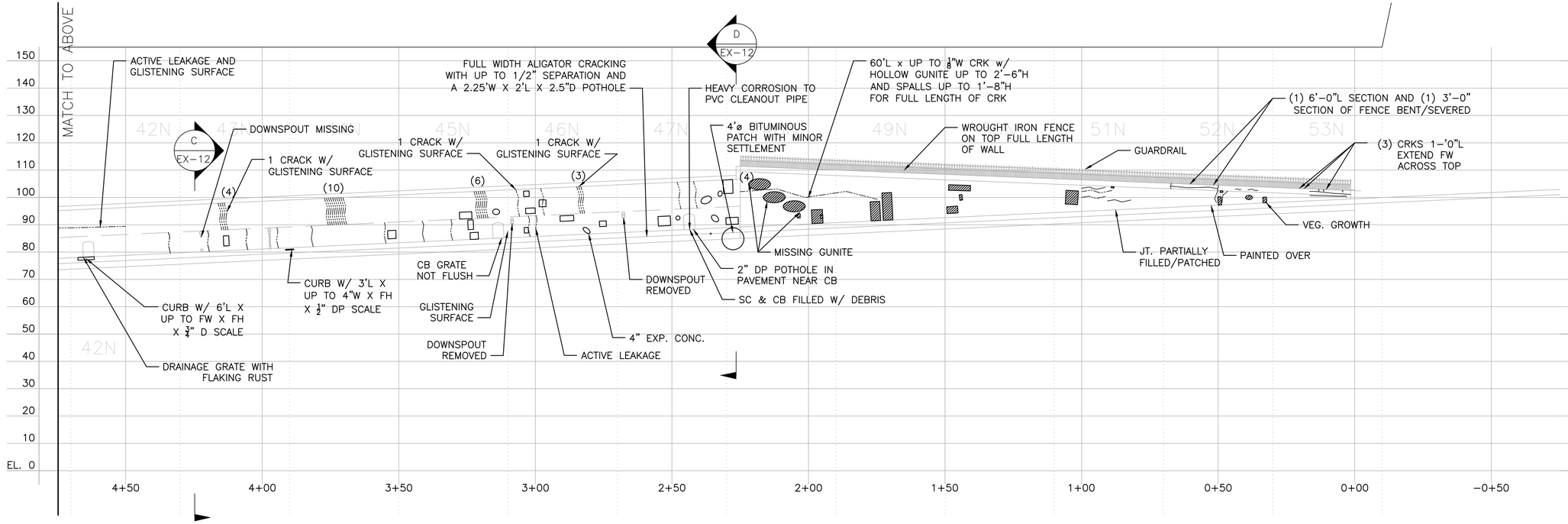

WSP USA INC.

100 SUMMER STREET, 13TH FLOOR
BOSTON, MA. 02110

166 VALLEY STREET, BUILDING 5,
PROVIDENCE, RI 02909

WWW.WSP.COM

RHODE ISLAND PUBLIC TRANSIT AUTHORITY

RHODE ISLAND
PUBLIC TRANSIT AUTHORITY

SCALE: 1"=20'

GRAPHIC SCALE

REVISIONS			REVISIONS		
NO.	DATE	BY	NO.	DATE	BY

EAST SIDE TUNNEL REHABILITATION

PROVIDENCE RHODE ISLAND

EXISTING ELEVATION 2 - LOOKING NORTH

DESIGNED BY: HPM
CHECKED BY: SCQ
DATE: 06/30/2023
PLAN NO.: EX-06
SHEET: 9 OF: 81

TPROFILE002.dwg

SHEET NOTES:

1. SEE SHEET G-03 FOR STRUCTURAL NOTES.

KEY PLAN
N.T.S.

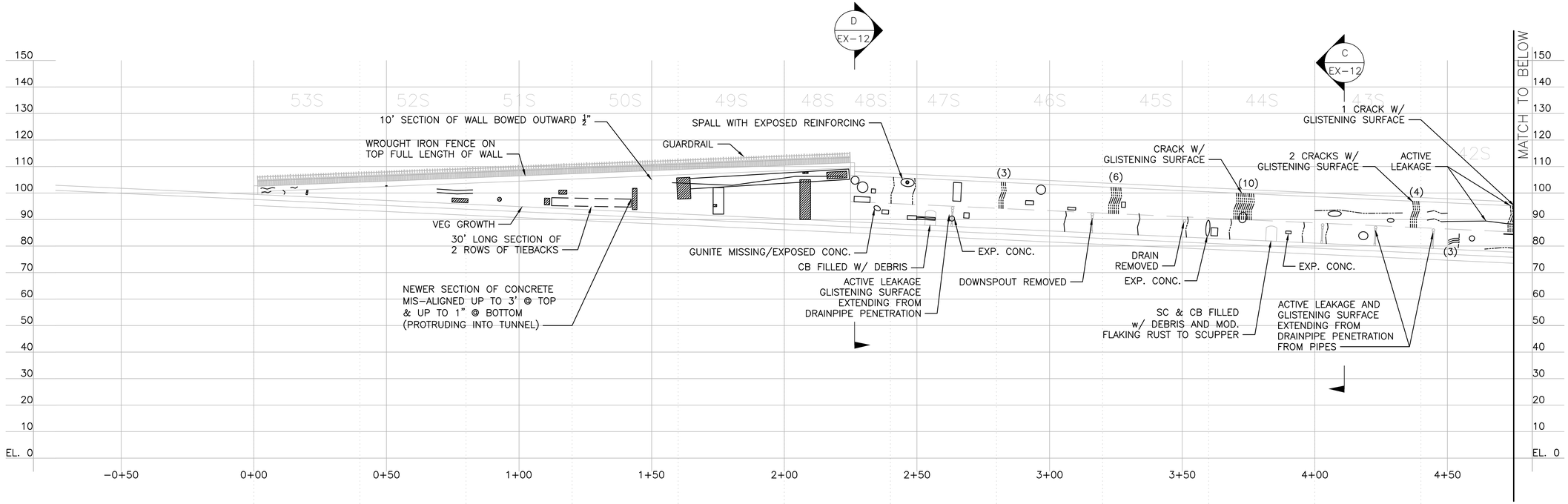

DEFECT LEGEND

CRACKS:
- DRY
- WET*

SPALLING

SPALL W/ EXPOSED REBAR

DELAMINATION

*WET CRACKS ARE DEFINED AS CRACKS OBSERVED TO HAVE ACTIVE LEAKAGE, EFFLORESCENCE, AND/OR A GLISTENING SURFACE

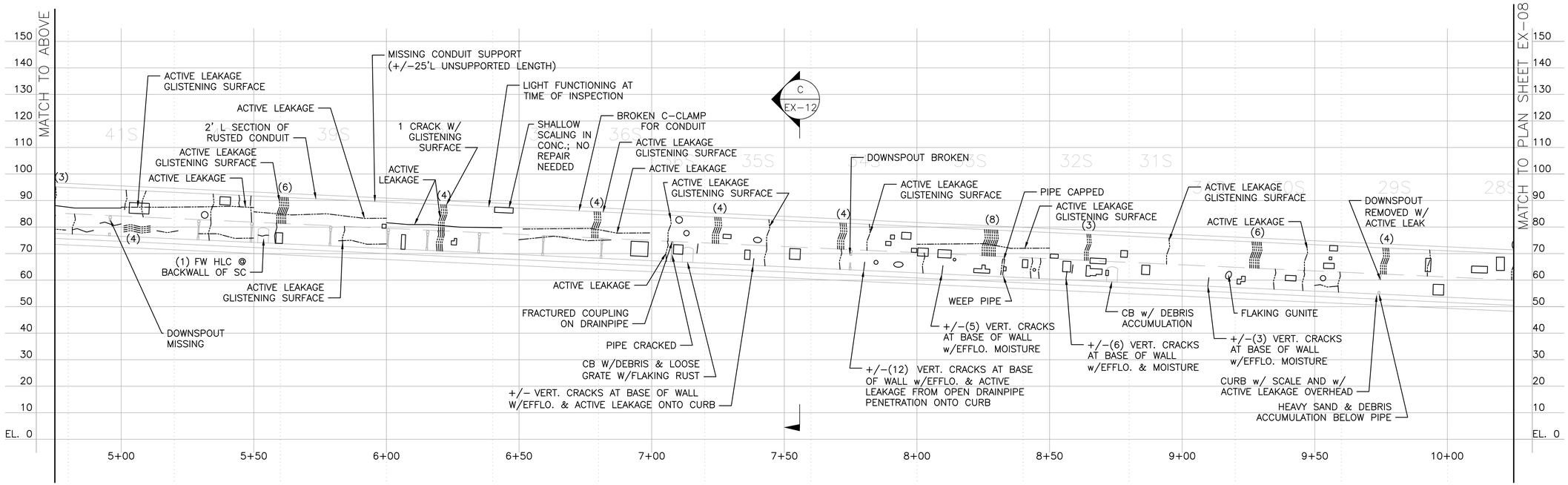

WSP USA INC.
100 SUMMER STREET, 13TH FLOOR
BOSTON, MA. 02110
166 VALLEY STREET, BUILDING 5,
PROVIDENCE, RI 02909
WWW.WSP.COM

RHODE ISLAND PUBLIC TRANSIT AUTHORITY

RHODE ISLAND
PUBLIC TRANSIT AUTHORITY

SCALE: 1"=20'
GRAPHIC SCALE

REVISIONS			REVISIONS		
NO.	DATE	BY	NO.	DATE	BY

EAST SIDE TUNNEL REHABILITATION

PROVIDENCE RHODE ISLAND

EXISTING ELEVATION 3 - LOOKING SOUTH

DESIGNED BY: HPM
CHECKED BY: SCQ
DATE: 06/30/2023
PLAN NO.: EX-07
SHEET: 10 OF: 81

TPROFILE003.dwg

SHEET NOTES:

1. SEE SHEET G-03 FOR STRUCTURAL NOTES.

KEY PLAN
N.T.S.

DEFECT LEGEND
CRACKS:
DRY
WET*
SPALLING
SPALL W/ EXPOSED REBAR
DELAMINATION

*WET CRACKS ARE DEFINED AS CRACKS OBSERVED TO HAVE ACTIVE LEAKAGE, EFFLORESCENCE, AND/OR A GLISTENING SURFACE

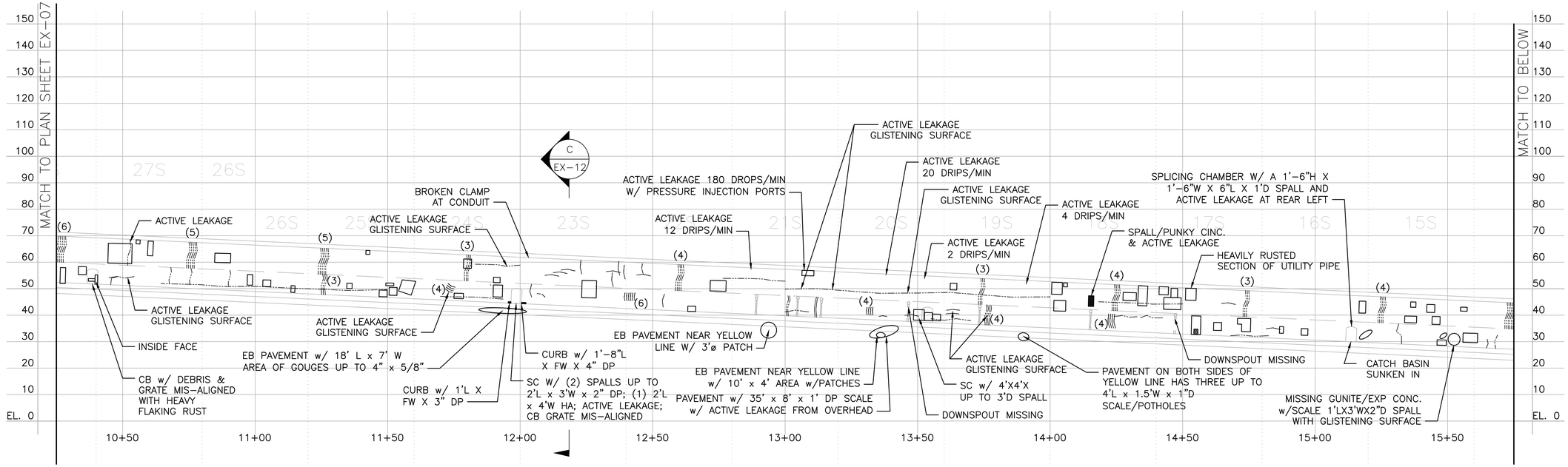

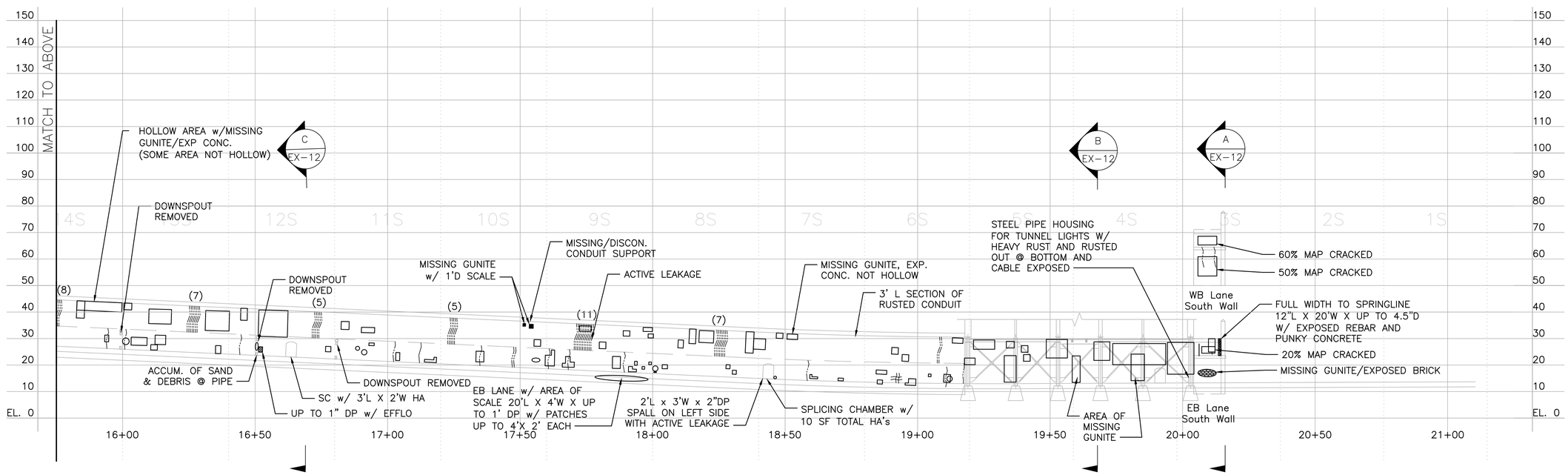

WSP USA INC.
100 SUMMER STREET, 13TH FLOOR
BOSTON, MA. 02110
166 VALLEY STREET, BUILDING 5,
PROVIDENCE, RI 02909
WWW.WSP.COM

RHODE ISLAND PUBLIC TRANSIT AUTHORITY

RHODE ISLAND
PUBLIC TRANSIT AUTHORITY

SCALE: 1"=20'
GRAPHIC SCALE

REVISIONS			REVISIONS		
NO.	DATE	BY	NO.	DATE	BY

EAST SIDE TUNNEL REHABILITATION

PROVIDENCE RHODE ISLAND

EXISTING ELEVATION 4 - LOOKING SOUTH

DESIGNED BY: HPM
CHECKED BY: SCQ
DATE: 06/30/2023
PLAN NO.: EX-08
SHEET: 11 OF: 81

TPROFILE004.dwg

SHEET NOTES:

1. SEE SHEET G-03 FOR STRUCTURAL NOTES.

DEFECT LEGEND

CRACKS:
- DRY
- WET*

SPALLING

SPALL W/ EXPOSED REBAR

DELAMINATION

*WET CRACKS ARE DEFINED AS CRACKS OBSERVED TO HAVE ACTIVE LEAKAGE, EFFLORESCENCE, AND/OR A GLISTENING SURFACE

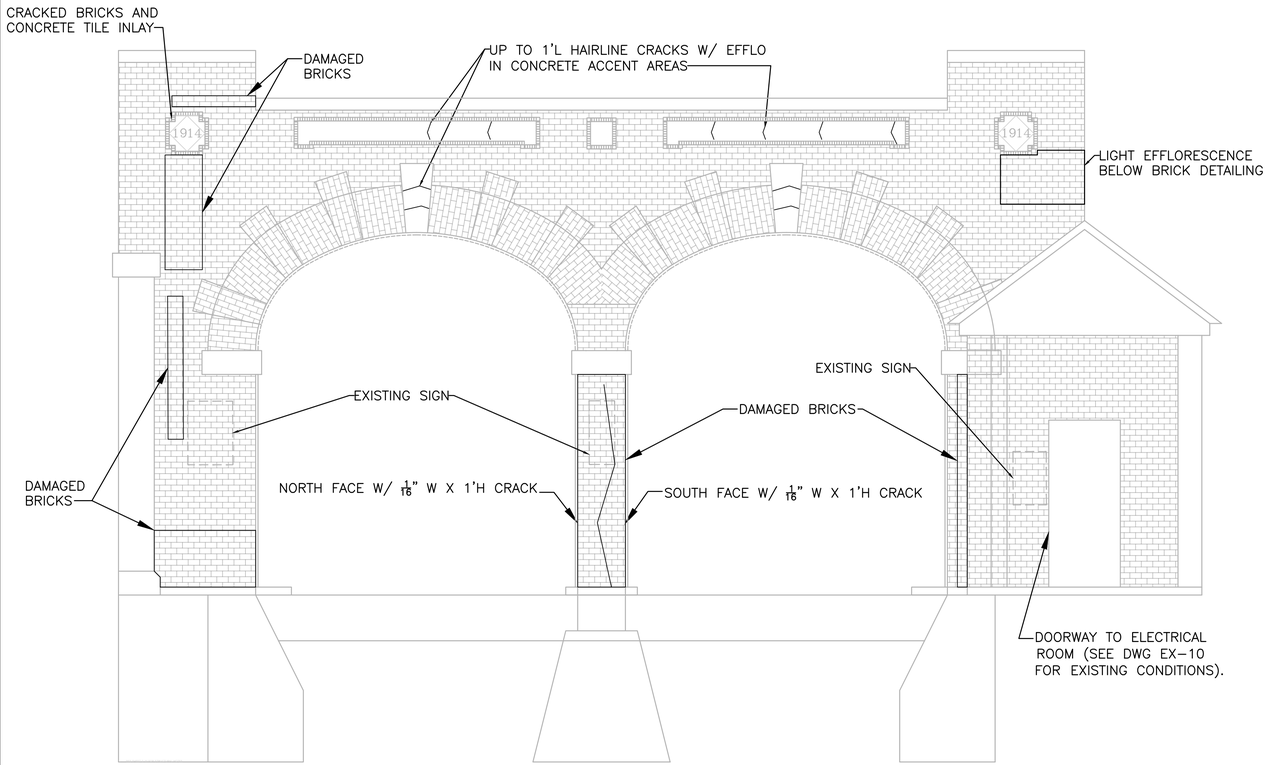

WEST PORTAL
N.T.S.

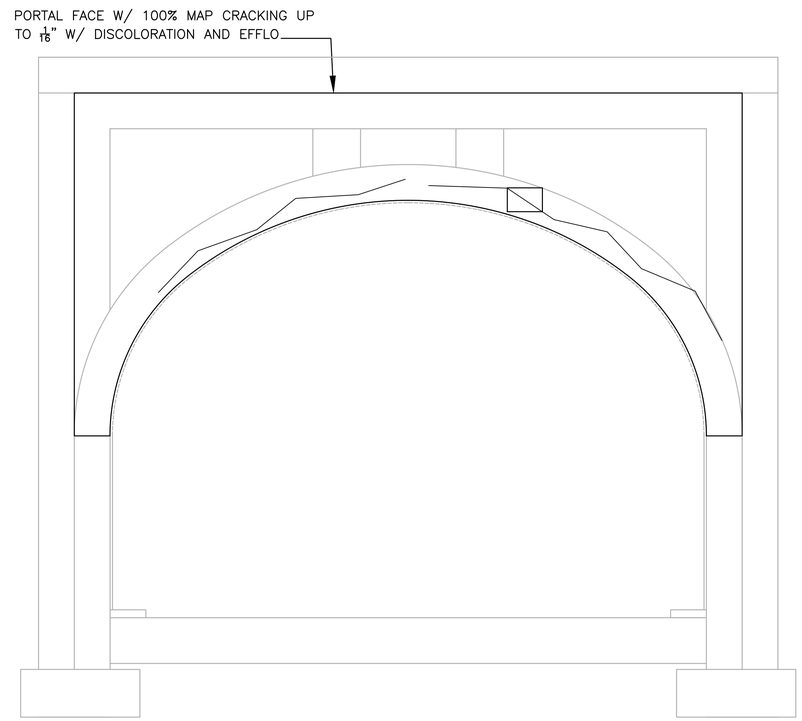

EAST PORTAL
N.T.S.

WSP USA INC.
100 SUMMER STREET, 13TH FLOOR
BOSTON, MA. 02110
166 VALLEY STREET, BUILDING 5,
PROVIDENCE, RI 02909
WWW.WSP.COM

RHODE ISLAND PUBLIC TRANSIT AUTHORITY

RHODE ISLAND
PUBLIC TRANSIT AUTHORITY

SCALE: NOT TO SCALE

REVISIONS			REVISIONS		
NO.	DATE	BY	NO.	DATE	BY

EAST SIDE TUNNEL REHABILITATION

PROVIDENCE RHODE ISLAND

EXISTING PORTAL DEFECTS

DESIGNED BY: HPM
CHECKED BY: SCQ
DATE: 06/30/2023
PLAN NO.: EX-09
SHEET: 12 OF: 81

TPORTAL-DEFECTS.dwg

SHEET NOTES:

1. SEE SHEET G-03 FOR STRUCTURAL NOTES.

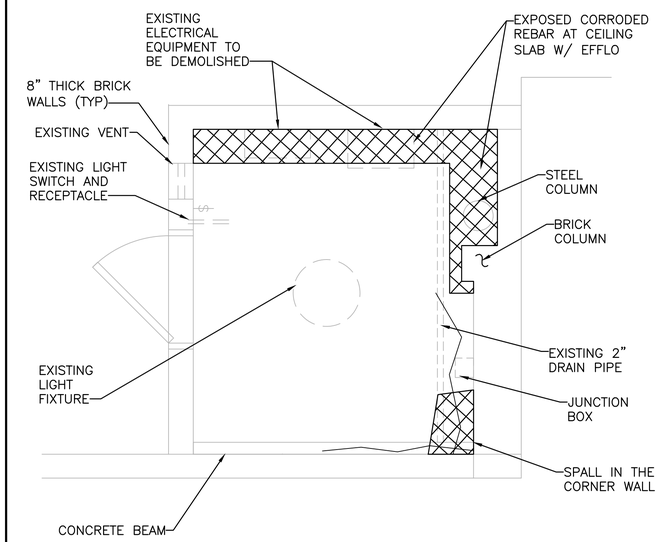

ELECTRICAL ROOM CEILING PLAN

SCALE: $\frac{1}{2}$" = 1'-0"

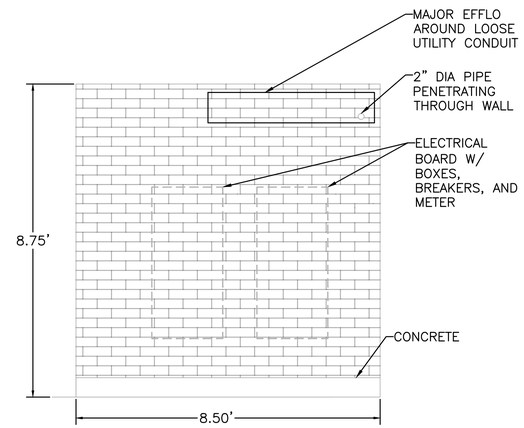

NORTH INTERIOR WALL ELEVATION

SCALE: $\frac{1}{2}$" = 1'-0"

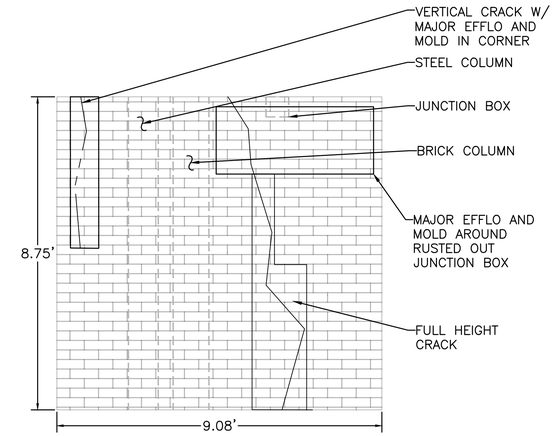

EAST INTERIOR WALL ELEVATION

SCALE: $\frac{1}{2}$" = 1'-0"

DEFECT LEGEND

CRACKS:

DRY

WET*

SPALLING

SPALL W/ EXPOSED REBAR

DELAMINATION

*WET CRACKS ARE DEFINED AS CRACKS OBSERVED TO HAVE ACTIVE LEAKAGE, EFFLORESCENCE, AND/OR A GLISTENING SURFACE

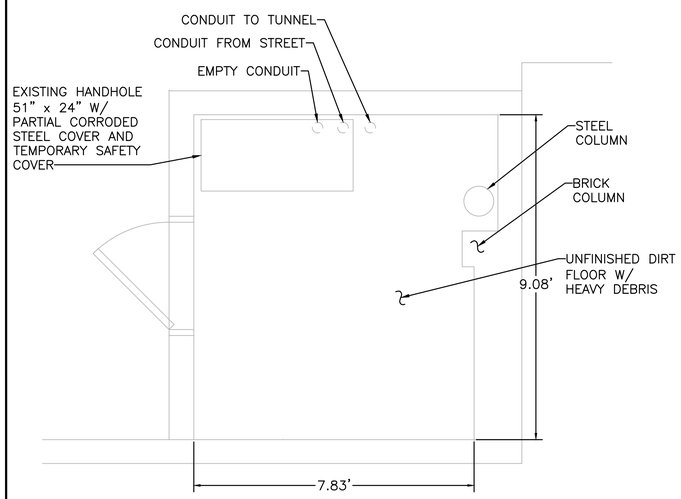

ELECTRICAL ROOM INVERT PLAN

SCALE: $\frac{1}{2}$" = 1'-0"

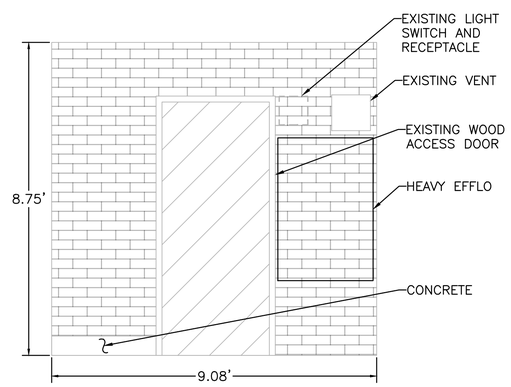

WEST INTERIOR WALL ELEVATION

SCALE: $\frac{1}{2}$" = 1'-0"

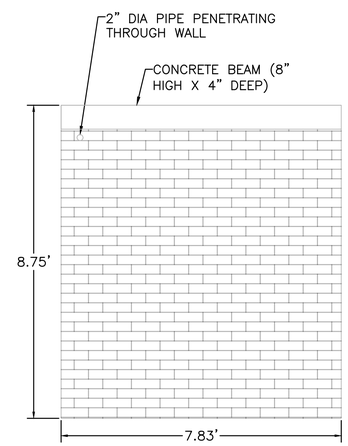

SOUTH INTERIOR WALL ELEVATION

SCALE: $\frac{1}{2}$" = 1'-0"

WSP USA INC.

100 SUMMER STREET, 13TH FLOOR
BOSTON, MA. 02110

166 VALLEY STREET, BUILDING 5,
PROVIDENCE, RI 02909

WWW.WSP.COM

RHODE ISLAND PUBLIC TRANSIT AUTHORITY

RHODE ISLAND
PUBLIC TRANSIT AUTHORITY

SCALE: 1/2"=1'

GRAPHIC SCALE

REVISIONS			REVISIONS		
NO.	DATE	BY	NO.	DATE	BY

EAST SIDE TUNNEL REHABILITATION

PROVIDENCE RHODE ISLAND

EXISTING ELECTRICAL ROOM SHEET 1 OF 2

DESIGNED BY: HPM
CHECKED BY: SCQ
DATE: 06/30/2023
PLAN NO.: EX-10
SHEET: 13 OF: 81

TDETAIL-01.dwg

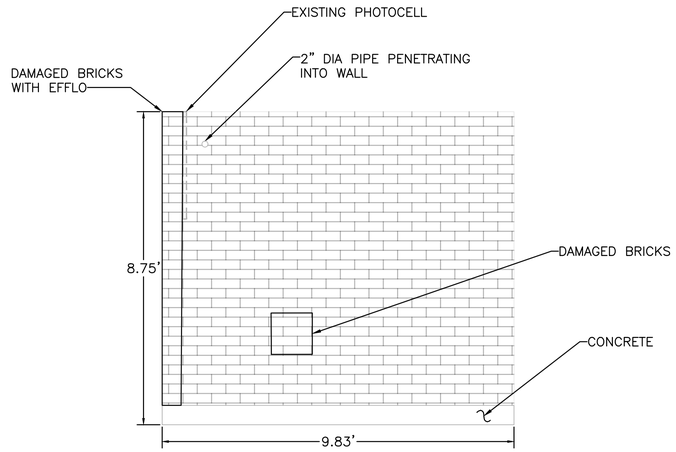

NORTH EXTERIOR WALL ELEVATION

SCALE: ½" = 1'–0"

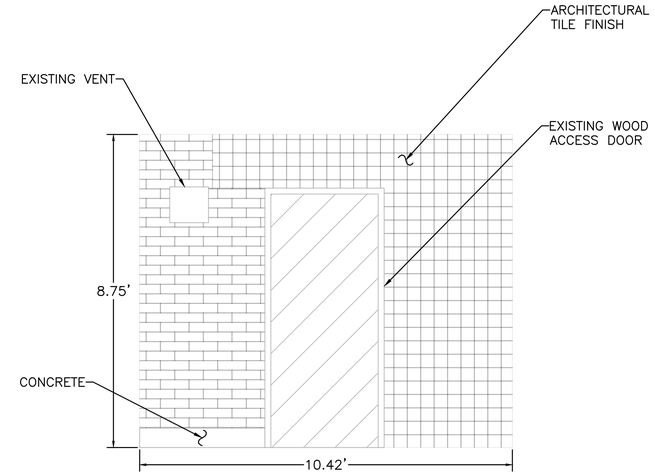

WEST EXTERIOR WALL ELEVATION

SCALE: ½" = 1'–0"

SHEET NOTES:

1. SEE SHEET G–03 FOR STRUCTURAL NOTES.
2. REFER TO ARCHITECTURAL SHEETS FOR BUS SHELTER SCOPE.

DEFECT LEGEND

CRACKS:
DRY
WET*

SPALLING

SPALL W/ EXPOSED REBAR

DELAMINATION

*WET CRACKS ARE DEFINED AS CRACKS OBSERVED TO HAVE ACTIVE LEAKAGE, EFFLORESCENCE, AND/OR A GLISTENING SURFACE

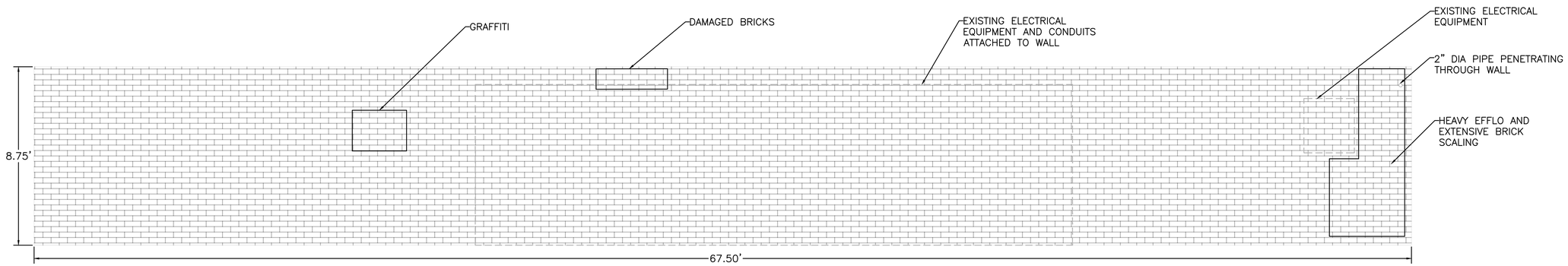

SOUTH EXTERIOR (BUS SHELTER) WALL ELEVATION – SOUTH FACE

SCALE: ⅜" = 1'–0"

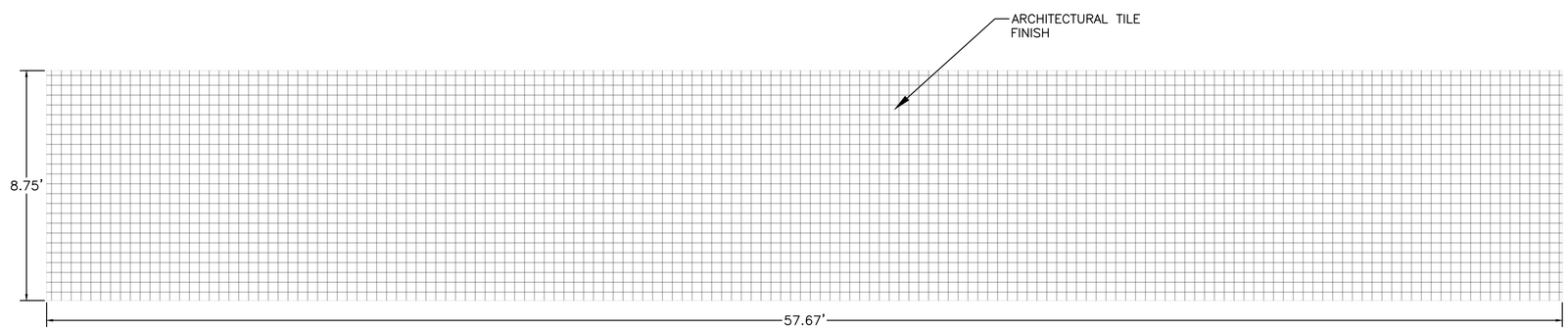

SOUTH EXTERIOR (BUS SHELTER) WALL ELEVATION – NORTH FACE

SCALE: ⅜" = 1'–0"

WSP USA INC.

100 SUMMER STREET, 13TH FLOOR
BOSTON, MA. 02110

166 VALLEY STREET, BUILDING 5,
PROVIDENCE, RI 02909

WWW.WSP.COM

RHODE ISLAND PUBLIC TRANSIT AUTHORITY

RHODE ISLAND
PUBLIC TRANSIT AUTHORITY

SCALE: AS NOTED

REVISIONS			REVISIONS		
NO.	DATE	BY	NO.	DATE	BY

EAST SIDE TUNNEL REHABILITATION

PROVIDENCE RHODE ISLAND

EXISTING ELECTRICAL ROOM SHEET 2 OF 2

DESIGNED BY: XXX
CHECKED BY: XXX
DATE: 06/30/2023
PLAN NO.: EX–11
SHEET: 14 OF: 81

TDETAIL–01A.dwg

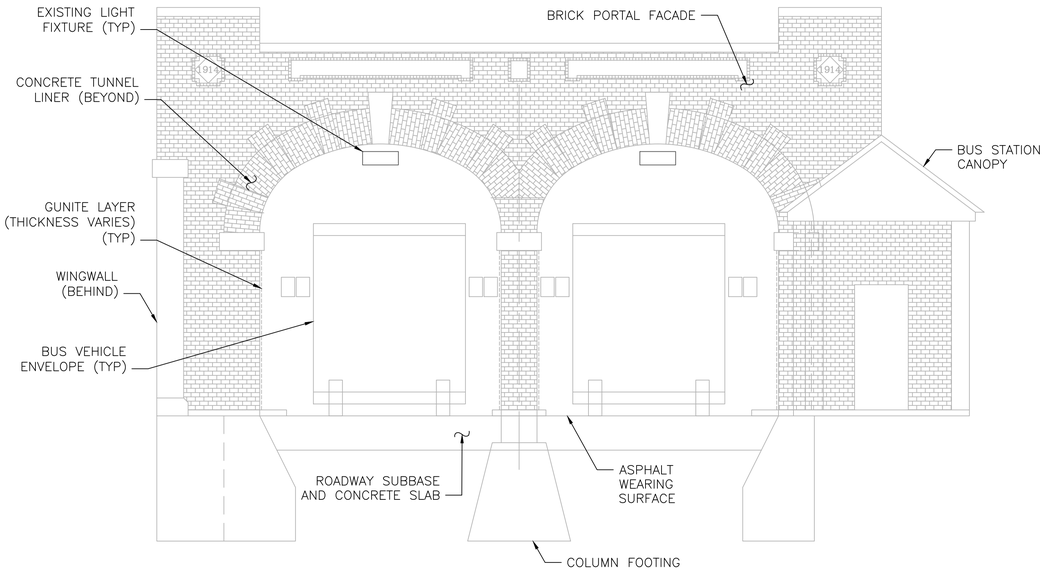

A TYPICAL SECTION
WEST PORTAL (LOOKING EAST)
N.T.S.

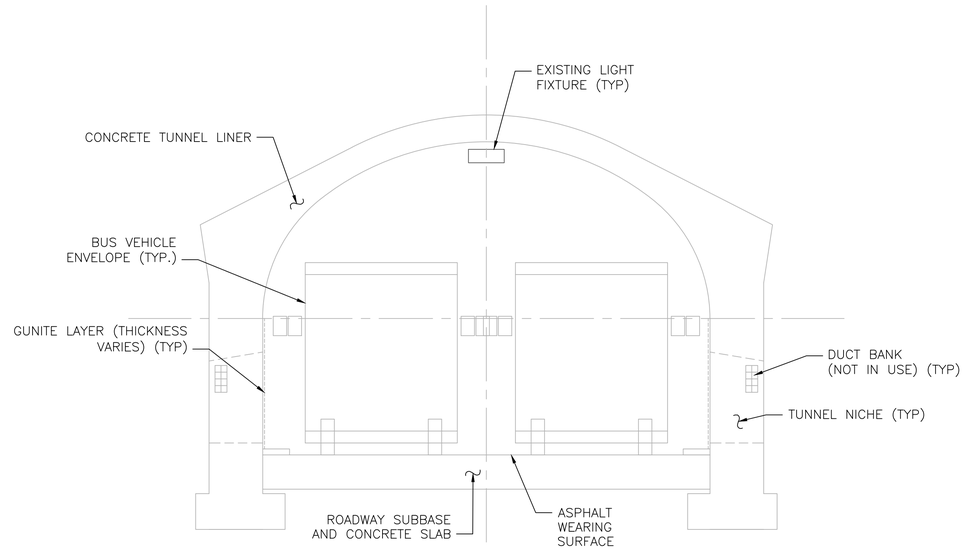

C TYPICAL SECTION
TUNNEL SECTION (LOOKING EAST)
N.T.S.

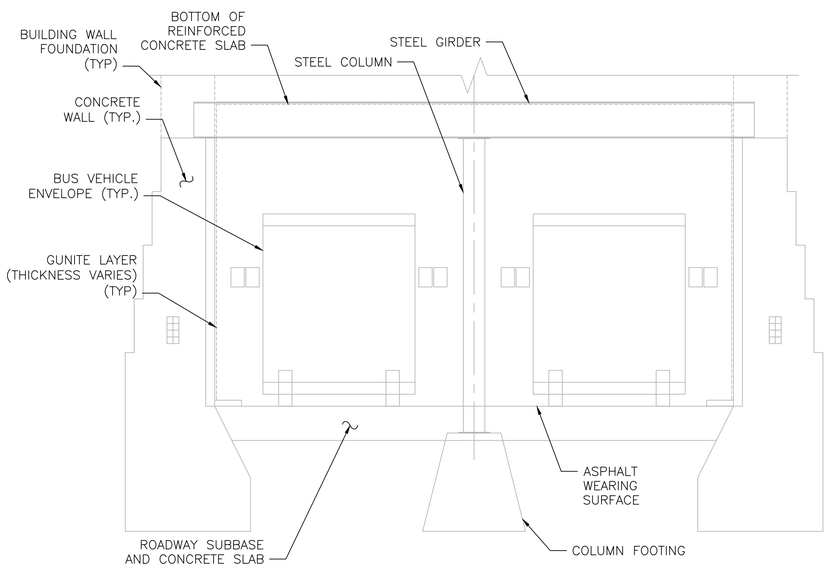

B TYPICAL SECTION
STEEL FRAME SECTION (LOOKING EAST)
N.T.S.

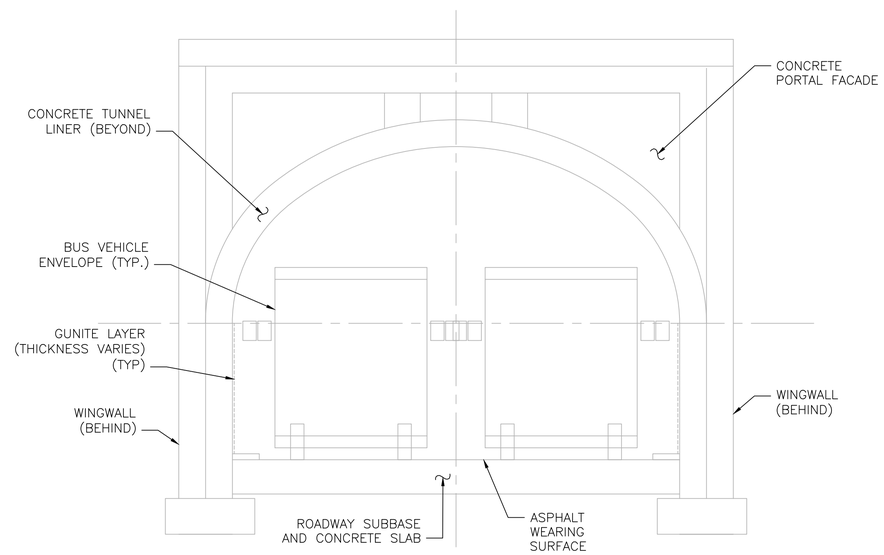

D TYPICAL SECTION
EAST PORTAL AND OPEN CUT (LOOKING WEST)
N.T.S.

WSP USA INC.
100 SUMMER STREET, 13TH FLOOR
BOSTON, MA. 02110
166 VALLEY STREET, BUILDING 5,
PROVIDENCE, RI 02909
WWW.WSP.COM

RHODE ISLAND PUBLIC TRANSIT AUTHORITY

RHODE ISLAND
PUBLIC TRANSIT AUTHORITY

SCALE: NOT TO SCALE

REVISIONS			REVISIONS		
NO.	DATE	BY	NO.	DATE	BY

EAST SIDE TUNNEL REHABILITATION

PROVIDENCE RHODE ISLAND

EXISTING TYPICAL CROSS SECTIONS

DESIGNED BY: HPM
CHECKED BY: SCQ
DATE: 06/30/2023
PLAN NO.: EX-12
SHEET: 15 OF: 81

TXSEC001.dwg

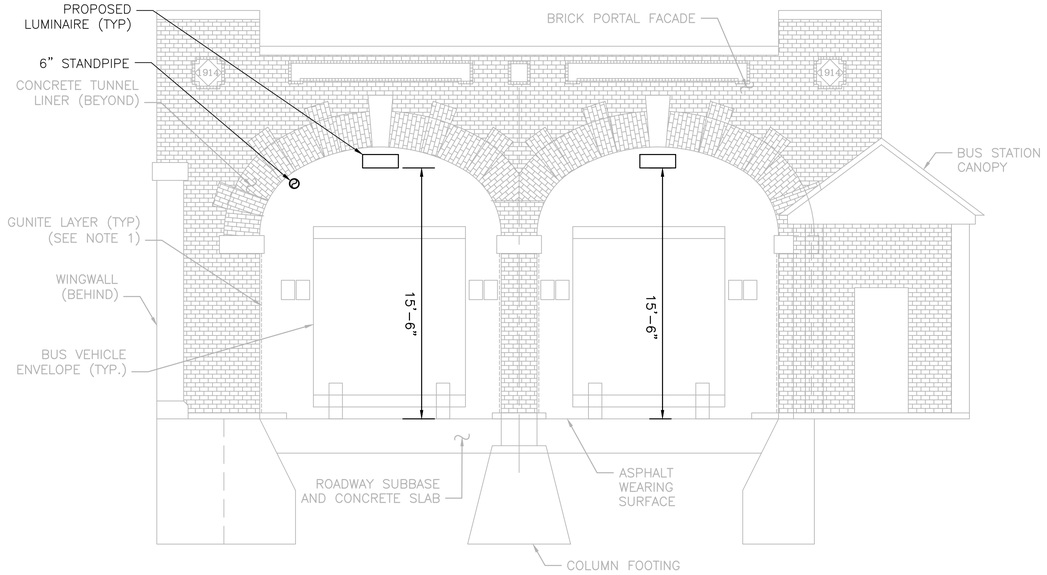

A TYPICAL SECTION
WEST PORTAL (LOOKING EAST)
N.T.S.

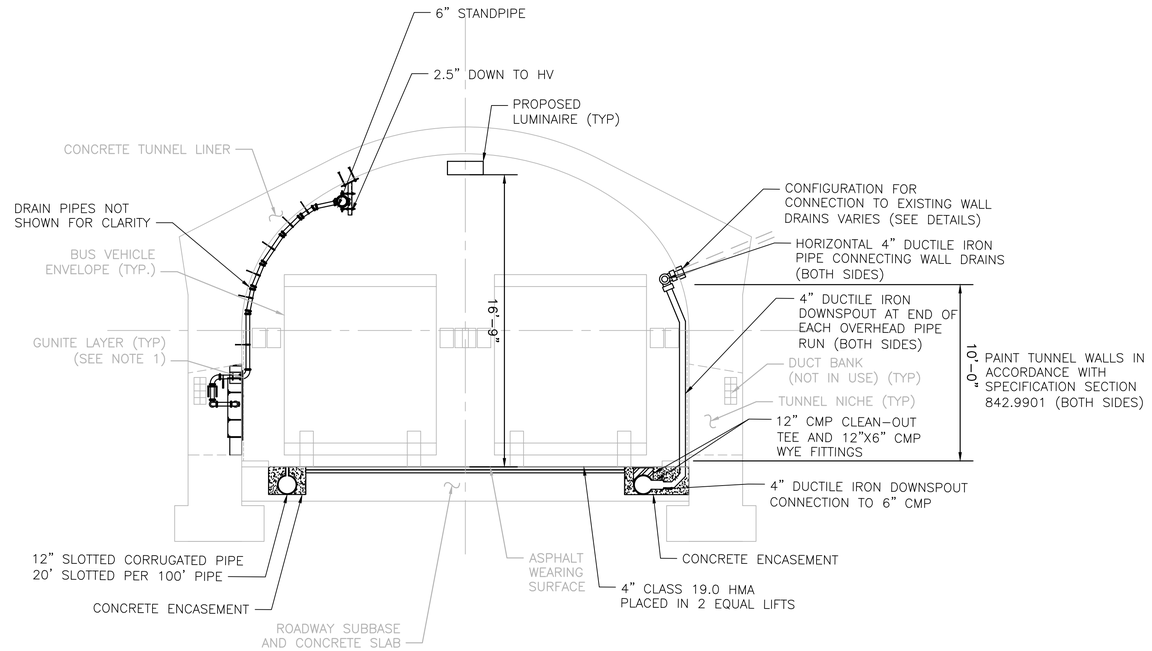

C TYPICAL SECTION
TUNNEL SECTION (LOOKING EAST)
N.T.S.

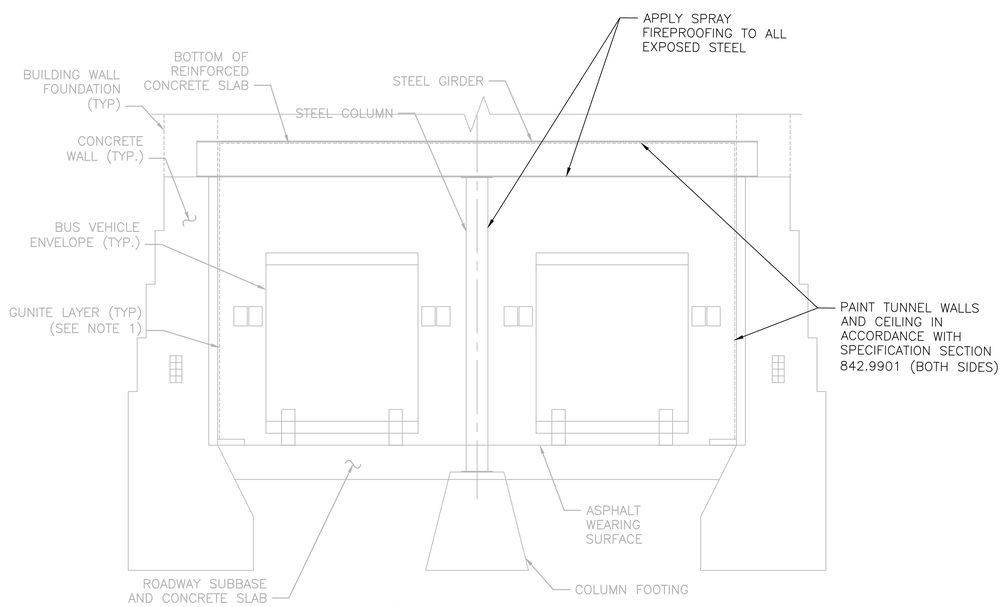

B TYPICAL SECTION
STEEL FRAME SECTION (LOOKING EAST)
N.T.S.

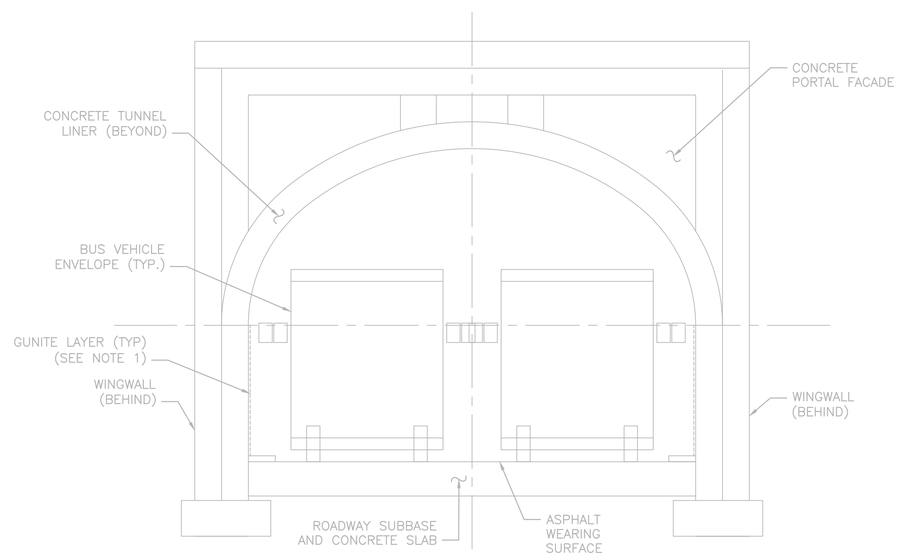

D TYPICAL SECTION
EAST PORTAL AND OPEN CUT (LOOKING WEST)
N.T.S.

SHEET NOTES:

1. EXISTING GUNITE LAYER TO BE REMOVED FOR FULL ARCH ABOVE SPRINGLINE, AND AT IDENTIFIED DEFECTS IN SIDEWALLS. SEE DEFECT AND REPAIR SHEETS FOR DETAILS.
2. WHERE GUNITE HAS BEEN REMOVED, A NEW SHOTCRETE LAYER SHALL BE PLACED. SEE NOTE 7 ON SHEET S-01.
3. COAT TUNNEL WALLS AND SIGNAGE IN ACCORDANCE WITH SPECIFICATION SECTION 842 ANTI GRAFFITI COATING.

WSP USA INC.
100 SUMMER STREET, 13TH FLOOR
BOSTON, MA. 02110
166 VALLEY STREET, BUILDING 5,
PROVIDENCE, RI 02909
WWW.WSP.COM

RHODE ISLAND PUBLIC TRANSIT AUTHORITY

RHODE ISLAND
PUBLIC TRANSIT AUTHORITY

SCALE: NOT TO SCALE

REVISIONS			REVISIONS		
NO.	DATE	BY	NO.	DATE	BY

EAST SIDE TUNNEL REHABILITATION
PROVIDENCE RHODE ISLAND

COMPOSITE TYPICAL SECTIONS

DESIGNED BY: HPM
CHECKED BY: SCQ
DATE: 06/30/2023
PLAN NO.: XS-01
SHEET: 16 OF: 81

TXSEC002.dwg

KEY PLAN
N.T.S.

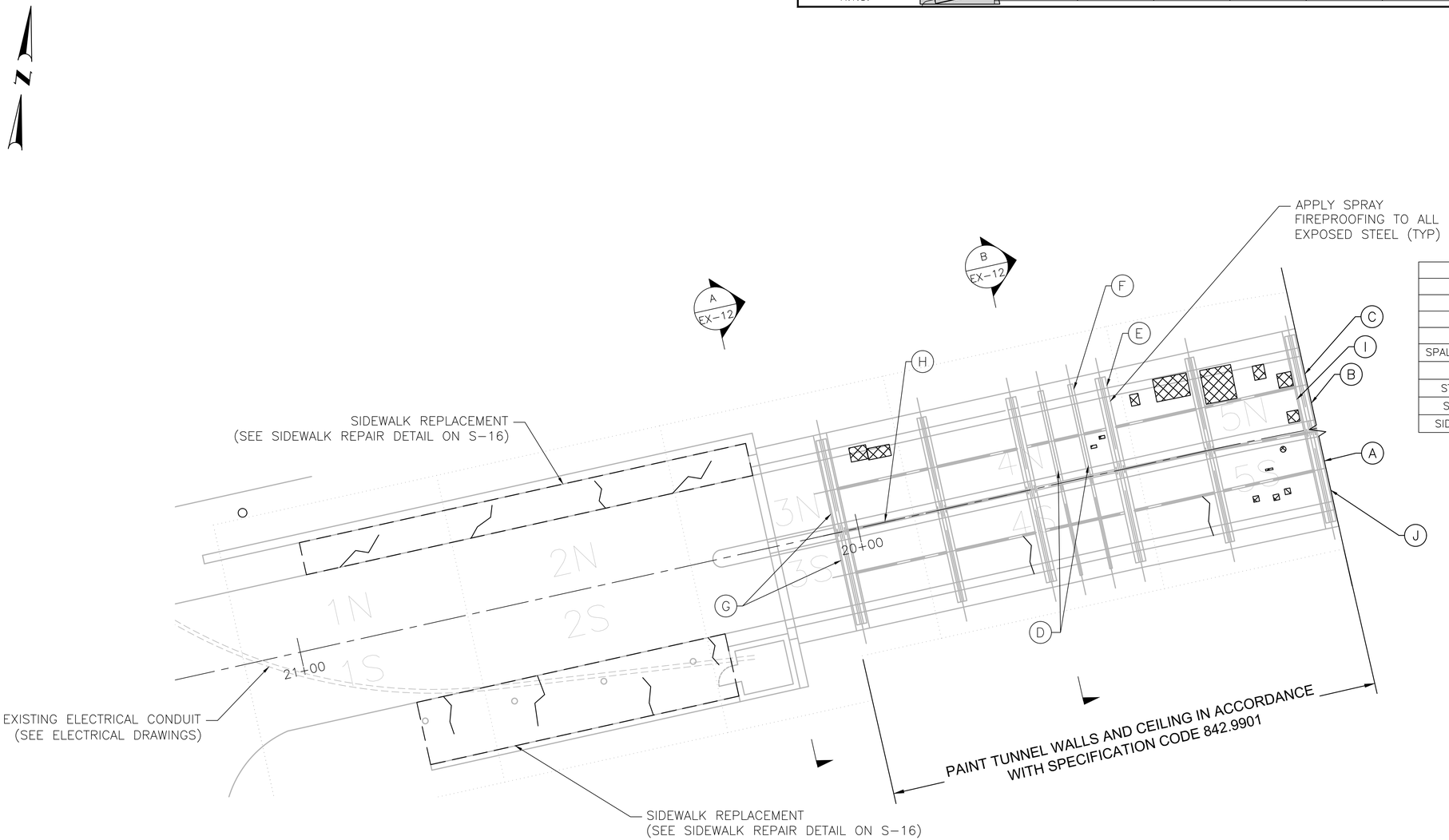

REPAIR LEGEND
CRACKS:
DRY
WET
GUNITE REMOVAL
SPALL REPAIR (S1/S2)
SPALL REPAIR (S3/S4)
DELAMINATION (SEE NOTE 6 ON S-01)

REPAIR QUANTITIES		
ITEM	UNIT	QUANTITY
DRY CRACKS	LF	14.0
WET CRACKS	LF	0.0
SPALLS	SF	9.0
SPALLS W/EXPOSED REBAR	SF	90.3
GUNITE REMOVAL	SF	0.0
STEEL SURFACE RUST	SF	128.3
STEEL SECTION LOSS	SF	96.8
SIDEWALK REPLACEMENT	SF	1077.0

DETERIORATION NOTES:

(A) EAST GIRDER F @ E. ELEV OF WEB w/ 7' L x FH SECTION LOSS (SL) WITH PITS UP TO $\frac{1}{4}$" $\frac{3}{16}$" D

(B) EAST GIRDER F @ E. ELEV. OF WEB w/ 8' L x UP TO $\frac{1}{4}$" D ($\frac{1}{8}$" AVG) SL @ TOP AND BOTTOM EF N OF STR B BF SL, 20"L x DOWN TO $\frac{1}{8}$" REM

(C) EAST GIRDER F @ E. ELEV OF BF w/ 2' L SL – TAPERS FROM $\frac{5}{8}$" REMAINING @ WEB TO $\frac{5}{16}$" REMAINING AT TOE

(D) GIRDER CA & CB TWO OPEN DRILL HOLES FOR THROUGH ROD

(E) GIRDER 2" L x FH x $\frac{3}{4}$" D WF OVER

(F) EF CB WEB HOLE FH x 2" L W ADT SL LINE WEB 5"Lx2"Hx$\frac{1}{4}$"D WEB BOWED $\frac{1}{4}$" TO EAST

(G) WEST GIRDER 8F w/ FL x FW x UP TO $\frac{1}{16}$" DP SL w/ HEAVY LAMINATE RUST

(H) STRINGERS @ 8 ELEV CONNECTION TO 4"D UNDER w/ FH x $\frac{1}{4}$" WIDE GAP

(I) ACTIVE LEAKAGE PENETRATING BETWEEN GIRDER AND DECK WITH STALACTITES

(J) E. GIRDER F @ E ELEV 01 w/ FL x FW x $\frac{1}{8}$" REM

SHEET NOTES:

1. SEE SHEET G-03 FOR STRUCTURAL NOTES.
2. SEE SHEETS S-02 AND S-03 FOR DEFECTS IN TUNNEL SIDEWALLS
3. SEE SHEETS S-13 TO S-19 FOR STRUCTURAL REPAIR DETAILS.
4. THE EXISTING GUNITE LAYER SHALL BE REMOVED FOR THE FULL ARCH FROM SPRINGLINE TO SPRINGLINE, AND AT NOTED DEFECTS IN THE SIDEWALLS BELOW THE SPRINGLINE.
5. ANY DEFECTS IN THE ORIGINAL CONCRETE THAT ARE REVEALED AFTER REMOVING THE GUNITE SHALL BE DOCUMENTED, APPROVED BY THE FIELD ENGINEER, AND REPAIRED IN ACCORDANCE WITH THE REPAIR DETAILS.
6. DELAMINATIONS ARE SHOWN IN THE GUNITE LAYER FOR REFERENCE ONLY. DELAMINATIONS NOTED IN THE GUNITE LAYER SHALL BE REMOVED TO SOUND GUNITE. DELAMINATIONS IN THE ORIGINAL CONCRETE SHALL BE REPAIRED WITH THE APPROPRIATE SPALL REPAIR DETAIL.
7. ALL REMOVED GUNITE IN THE SIDEWALLS SHALL BE REPLACED BY A NEW SHOTCRETE LAYER, MATCHING THE THICKNESS OF THE ADJACENT GUNITE TO PRODUCE A CONSISTENT WALL FACE. THE SHOTCRETE FINISH SHALL MATCH THE FINISH OF THE EXISTING GUNITE.
8. COAT TUNNEL WALLS AND SIGNAGE IN ACCORDANCE WITH SPECIFICATION SECTION 842 ANTI GRAFFITI COATING.

WSP USA INC.
100 SUMMER STREET, 13TH FLOOR
BOSTON, MA. 02110
166 VALLEY STREET, BUILDING 5,
PROVIDENCE, RI 02909
WWW.WSP.COM

RHODE ISLAND PUBLIC TRANSIT AUTHORITY

RHODE ISLAND
PUBLIC TRANSIT AUTHORITY

SCALE: 1"=10'
GRAPHIC SCALE

REVISIONS			REVISIONS		
NO.	DATE	BY	NO.	DATE	BY

EAST SIDE TUNNEL REHABILITATION
PROVIDENCE RHODE ISLAND
STEEL FRAMING REPAIR PLAN

DESIGNED BY: HPM
CHECKED BY: SCQ
DATE: 06/30/2023
PLAN NO.: S-01
SHEET: 17 OF: 81

STELDETL001.dwg

SHEET NOTES:

1. REMOVE EXISTING PAINT ON GUARDRAIL AND REPAINT. SEE CODES 201.9902 – SELECTIVE DEMOLITION AND 842.9901 – PAINTING FOR ADDITIONAL INFORMATION.
2. ENTIRE BRICK WALL SHALL BE RAKED AND REPOINTED. REFER TO SPECIFICATION SECTION 807.0350 MASONRY CLEANING, REPAIRING, AND REPOINTING FOR BRICK REPAIR AND CLEANING WORK.

KEY PLAN
N.T.S.

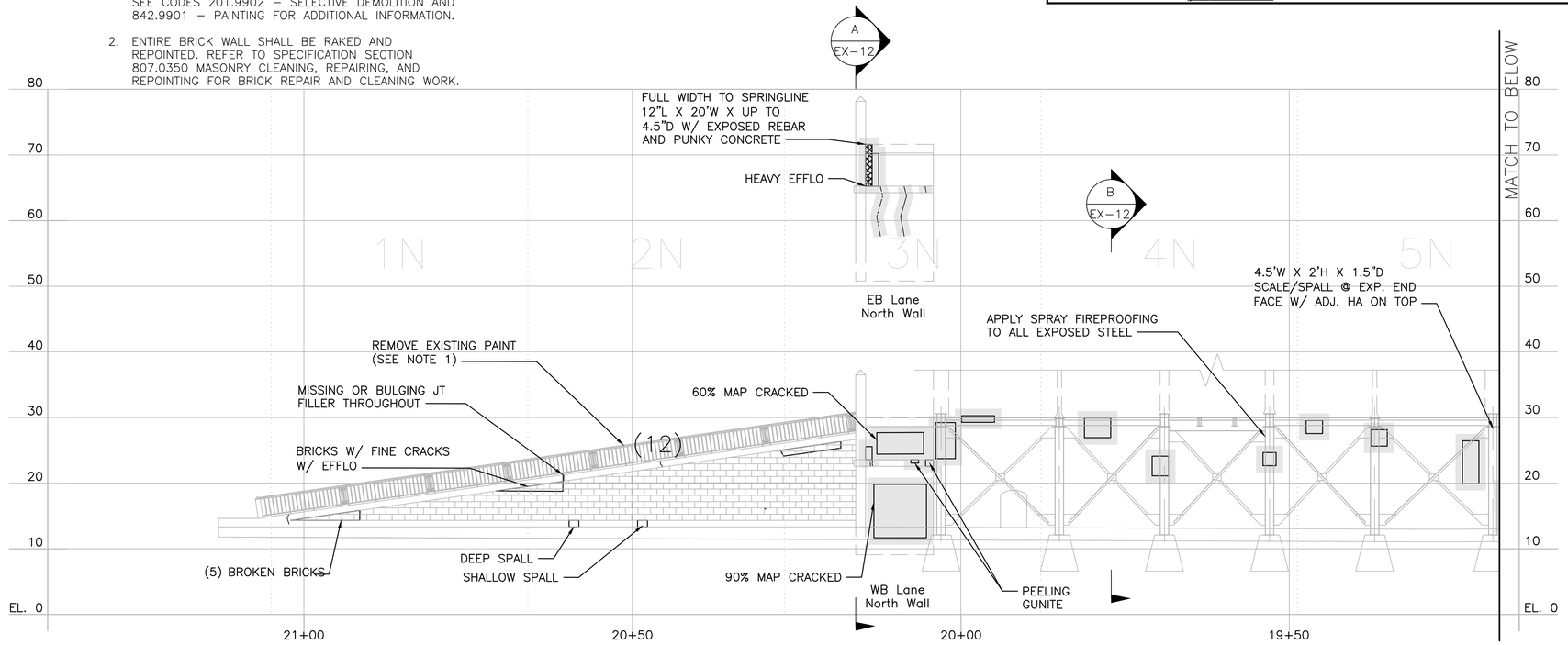

REPAIR LEGEND
CRACKS:
DRY
WET
GUNITE REMOVAL
SPALL REPAIR (S1/S2)
SPALL REPAIR (S3/S4)
DELAMINATION (SEE NOTE 6 ON S-01)

REPAIR QUANTITIES		
ITEM	UNIT	QUANTITY
DRY CRACKS	LF	14.8
WET CRACKS	LF	1.4
SPALLS	SF	6.6
SPALLS W/EXPOSED REBAR	SF	10.0
GUNITE REMOVAL	SF	280.8
ROADWAY SLAB	SF	0.0
ROADWAY CURB	SF	3.8
SHOTCRETE PLACEMENT	CY	1.6
BRICK REPAIR	SF	24.5
BRICK CLEANING	SF	505.0
BRICK REPOINTING	LF	3030.0

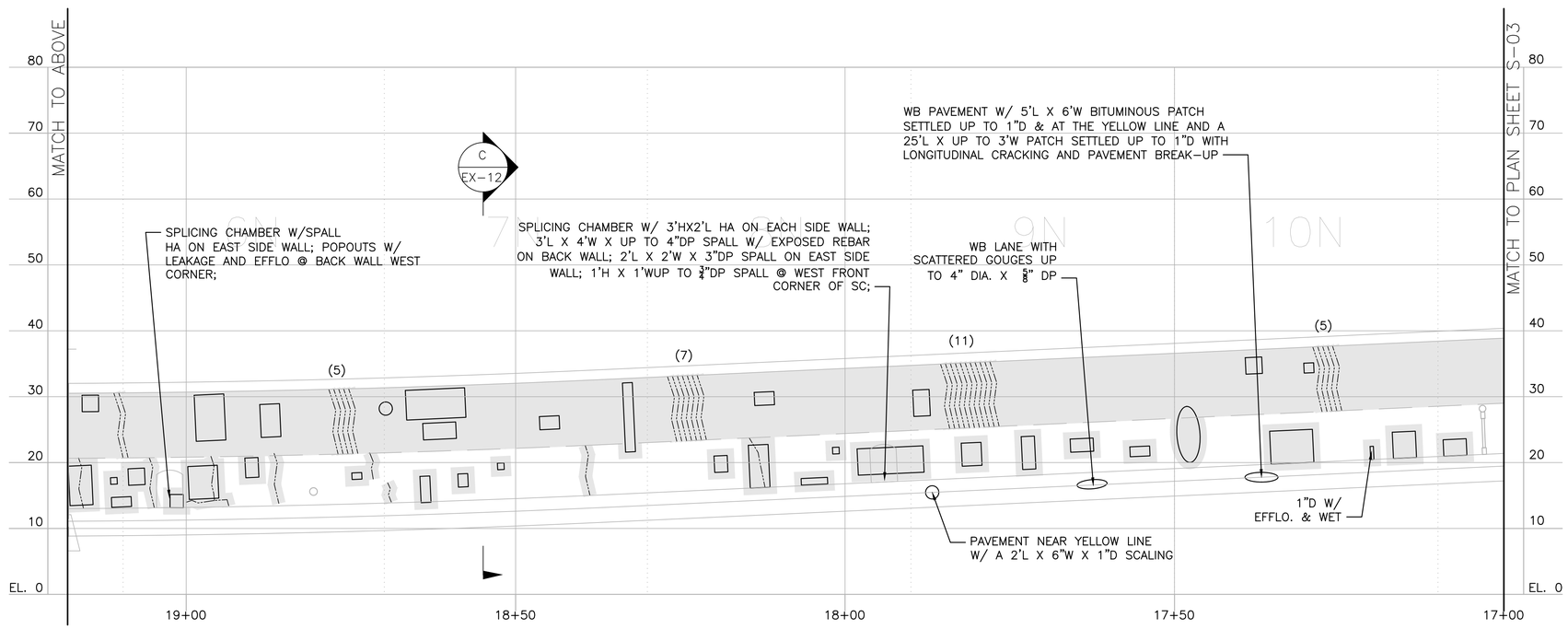

REPAIR QUANTITIES		
ITEM	UNIT	QUANTITY
DRY CRACKS	LF	0.0
WET CRACKS	LF	155.0
SPALLS	SF	44.0
SPALLS W/EXPOSED REBAR	SF	12.0
GUNITE REMOVAL	SF	4404.1
ROADWAY SLAB	SF	118.6
ROADWAY CURB	SF	0.0
SHOTCRETE PLACEMENT	CY	2.8

WSP USA INC.
100 SUMMER STREET, 13TH FLOOR
BOSTON, MA. 02110
166 VALLEY STREET, BUILDING 5,
PROVIDENCE, RI 02909
WWW.WSP.COM

RHODE ISLAND PUBLIC TRANSIT AUTHORITY

RHODE ISLAND
PUBLIC TRANSIT AUTHORITY

SCALE: 1"=10'
GRAPHIC SCALE

REVISIONS			REVISIONS		
NO.	DATE	BY	NO.	DATE	BY

EAST SIDE TUNNEL REHABILITATION
PROVIDENCE RHODE ISLAND
STRUCTURAL REPAIR ELEVATION 1 - LOOKING NORTH

DESIGNED BY: HPM
CHECKED BY: SCQ
DATE: 06/30/2023
PLAN NO.: S-02
SHEET: 18 OF: 81

TPROFILE001A.dwg

KEY PLAN
N.T.S.

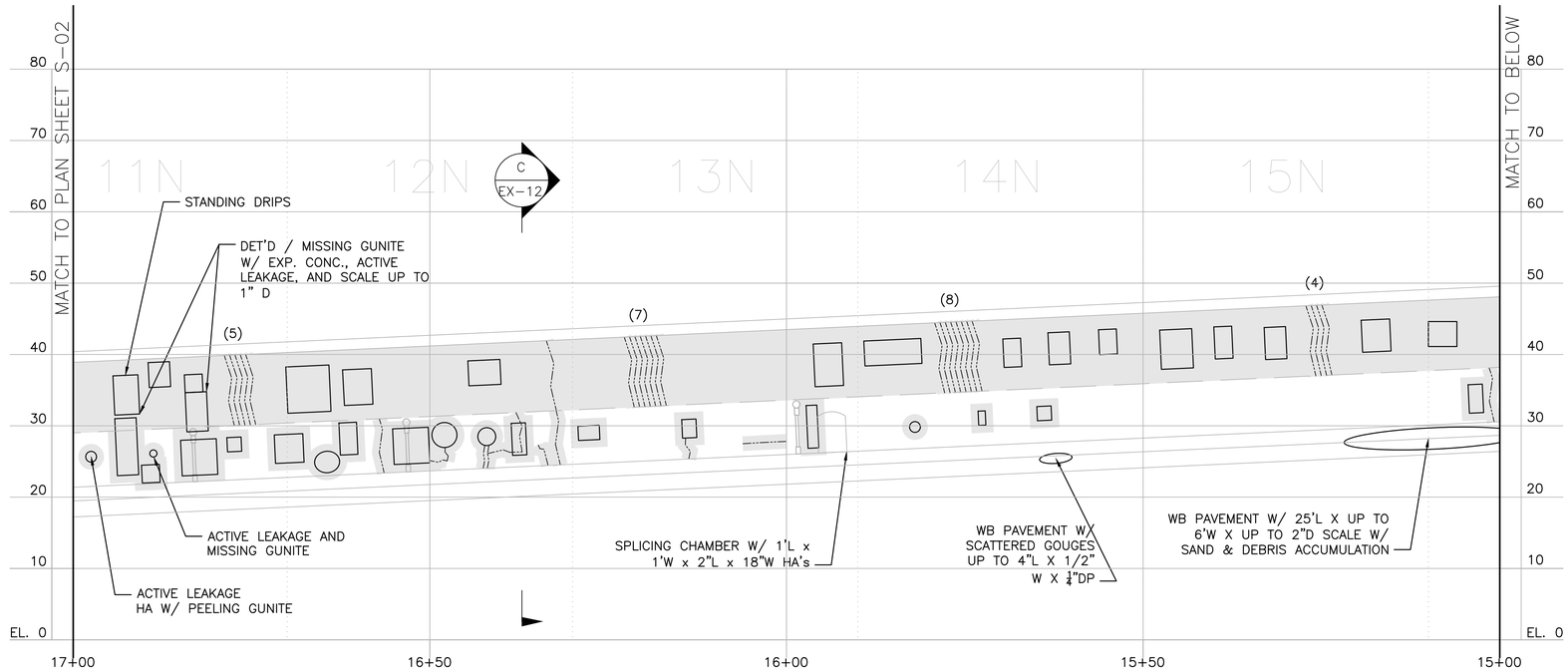

REPAIR LEGEND
CRACKS:
DRY
WET
GUNITE REMOVAL
SPALL REPAIR (S1/S2)
SPALL REPAIR (S3/S4)
DELAMINATION (SEE NOTE 6 ON S-01)

REPAIR QUANTITIES		
ITEM	UNIT	QUANTITY
DRY CRACKS	LF	0.0
WET CRACKS	LF	129.6
SPALLS	SF	38.9
SPALLS W/EXPOSED REBAR	SF	0.0
GUNITE REMOVAL	SF	3894.3
ROADWAY SLAB	SF	152.0
ROADWAY CURB	SF	0.0
SHOTCRETE PLACEMENT	CY	1.8

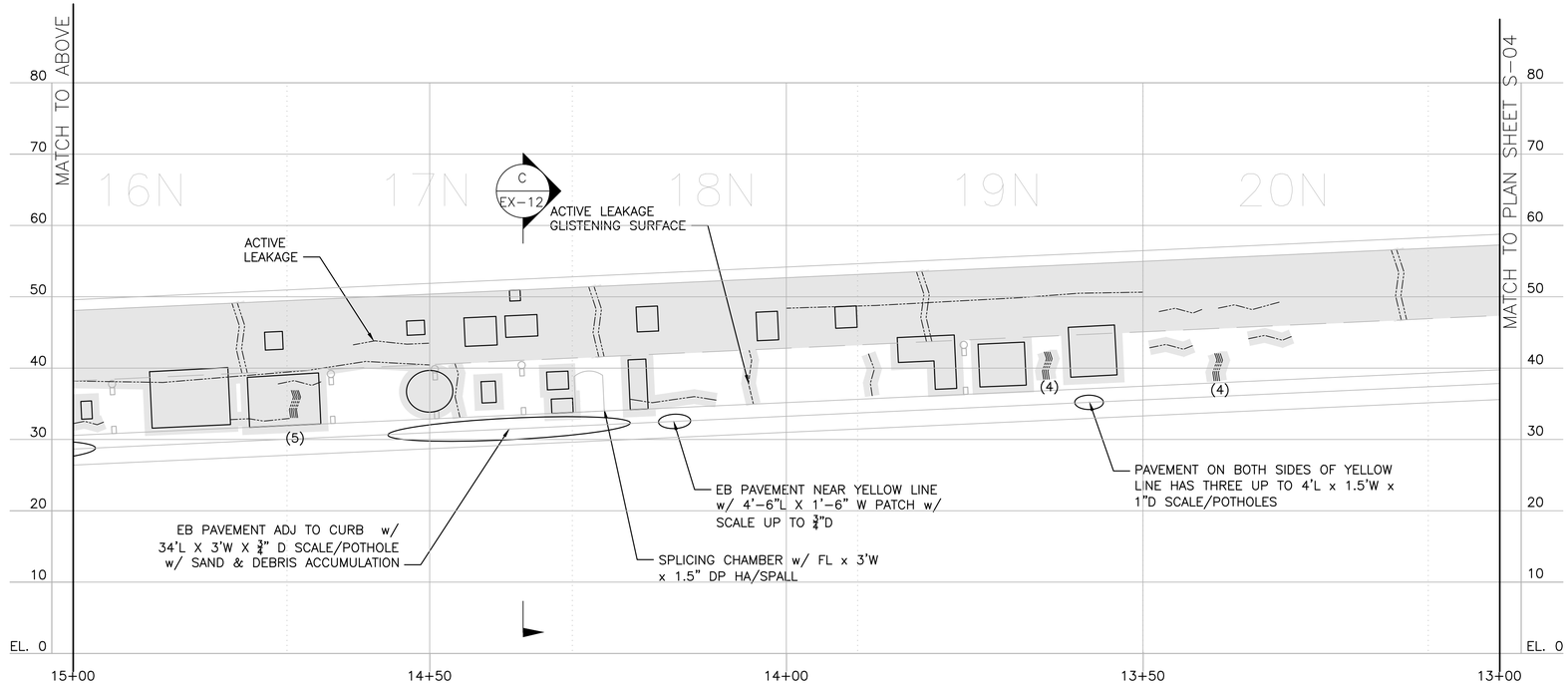

REPAIR QUANTITIES		
ITEM	UNIT	QUANTITY
DRY CRACKS	LF	0.0
WET CRACKS	LF	116.4
SPALLS	SF	43.2
SPALLS W/EXPOSED REBAR	SF	0.0
GUNITE REMOVAL	SF	4315.4
ROADWAY SLAB	SF	117.8
ROADWAY CURB	SF	0.0
SHOTCRETE PLACEMENT	CY	4.4

WSP USA INC.
100 SUMMER STREET, 13TH FLOOR
BOSTON, MA. 02110
166 VALLEY STREET, BUILDING 5,
PROVIDENCE, RI 02909
WWW.WSP.COM

RHODE ISLAND PUBLIC TRANSIT AUTHORITY

RHODE ISLAND
PUBLIC TRANSIT AUTHORITY

SCALE: 1"=10'
GRAPHIC SCALE

REVISIONS			REVISIONS		
NO.	DATE	BY	NO.	DATE	BY

EAST SIDE TUNNEL REHABILITATION
PROVIDENCE RHODE ISLAND
STRUCTURAL REPAIR ELEVATION 2 - LOOKING NORTH

DESIGNED BY: HPM
CHECKED BY: SCQ
DATE: 06/30/2023
PLAN NO.: S-03
SHEET: 19 OF: 81

TPROFILE001B.dwg

KEY PLAN
N.T.S.

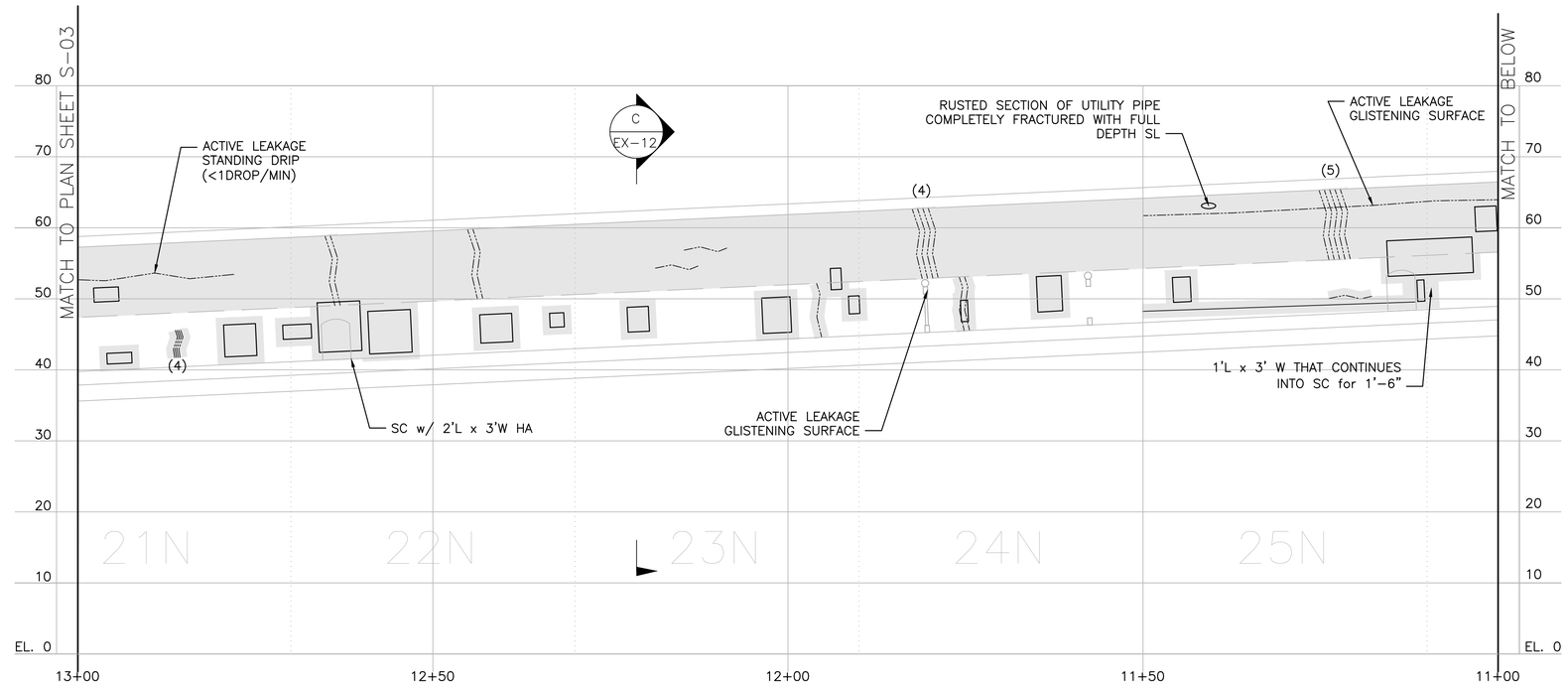

REPAIR LEGEND
CRACKS:
DRY
WET
GUNITE REMOVAL
SPALL REPAIR (S1/S2)
SPALL REPAIR (S3/S4)
DELAMINATION (SEE NOTE 6 ON S-01)

REPAIR QUANTITIES		
ITEM	UNIT	QUANTITY
DRY CRACKS	LF	4.6
WET CRACKS	LF	114.5
SPALLS	SF	40.8
SPALLS W/EXPOSED REBAR	SF	0.0
GUNITE REMOVAL	SF	4081.0
ROADWAY SLAB	SF	0.0
ROADWAY CURB	SF	0.0
SHOTCRETE PLACEMENT	CY	3.0

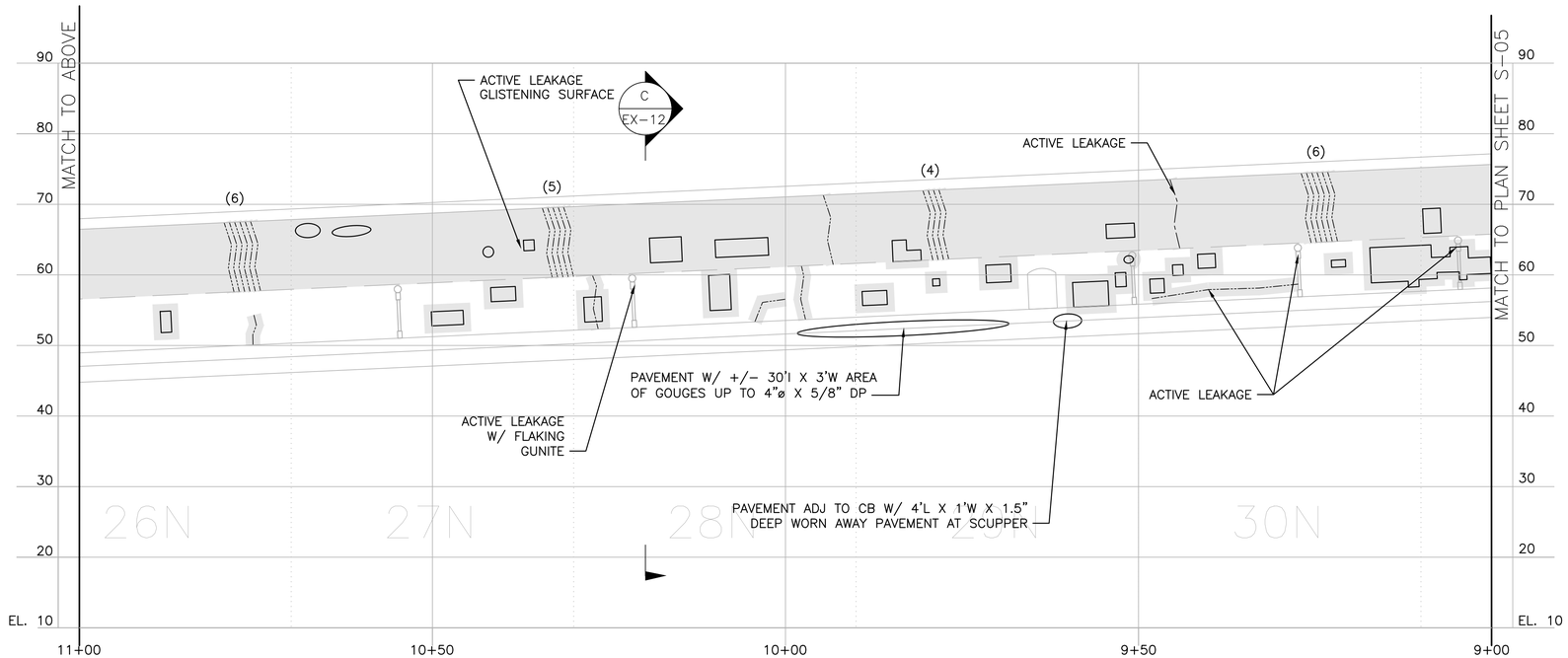

REPAIR QUANTITIES		
ITEM	UNIT	QUANTITY
DRY CRACKS	LF	5.0
WET CRACKS	LF	128.1
SPALLS	SF	39.0
SPALLS W/EXPOSED REBAR	SF	0.0
GUNITE REMOVAL	SF	3900.6
ROADWAY SLAB	SF	94.0
ROADWAY CURB	SF	0.0
SHOTCRETE PLACEMENT	CY	1.9

WSP USA INC.
100 SUMMER STREET, 13TH FLOOR
BOSTON, MA. 02110
166 VALLEY STREET, BUILDING 5,
PROVIDENCE, RI 02909
WWW.WSP.COM

RHODE ISLAND PUBLIC TRANSIT AUTHORITY

RHODE ISLAND
PUBLIC TRANSIT AUTHORITY

SCALE: 1"=10'
GRAPHIC SCALE

REVISIONS			REVISIONS		
NO.	DATE	BY	NO.	DATE	BY

EAST SIDE TUNNEL REHABILITATION
PROVIDENCE RHODE ISLAND
STRUCTURAL REPAIR ELEVATION 3 - LOOKING NORTH

DESIGNED BY: HPM
CHECKED BY: SCQ
DATE: 06/30/2023
PLAN NO.: S-04
SHEET: 20 OF: 81

TPROFILE002A.dwg

KEY PLAN
N.T.S.

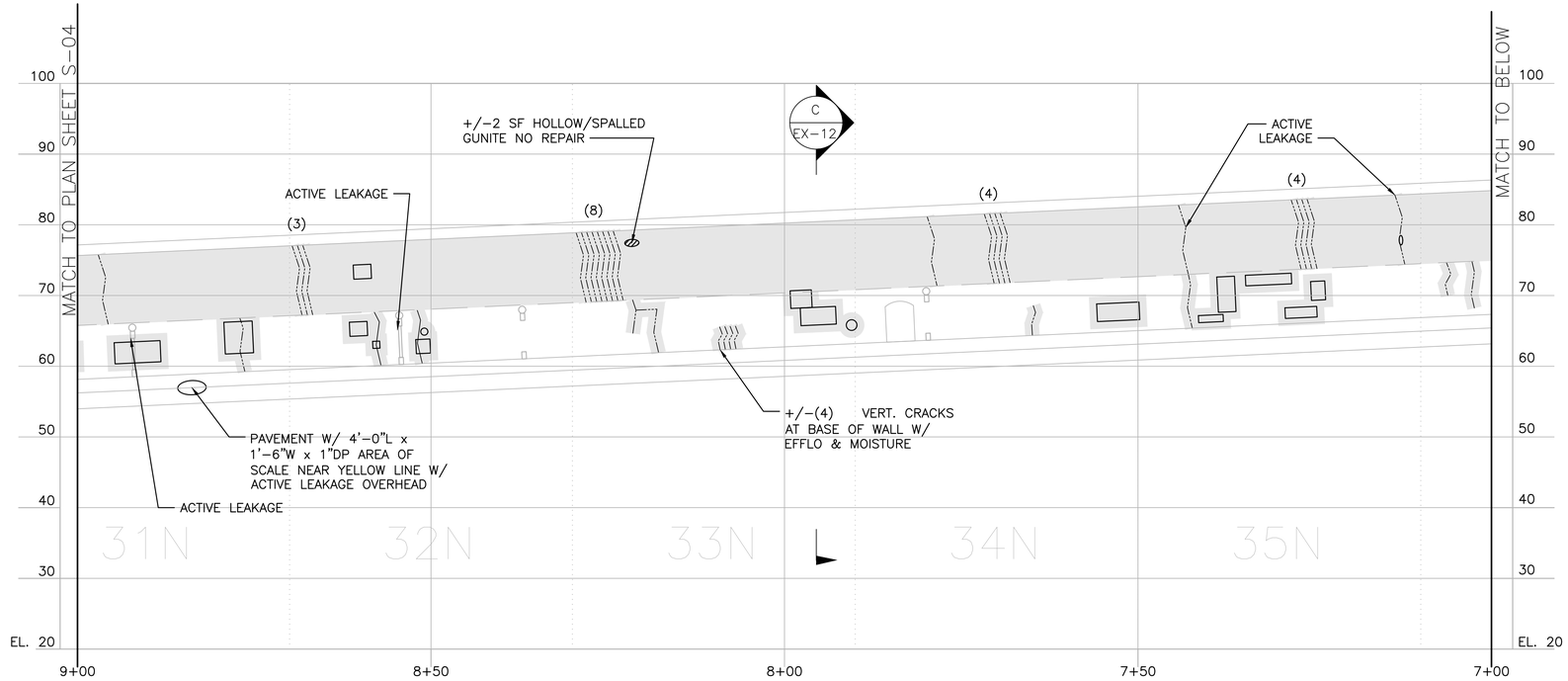

REPAIR LEGEND
CRACKS:
DRY
WET
GUNITE REMOVAL
SPALL REPAIR (S1/S2)
SPALL REPAIR (S3/S4)
DELAMINATION (SEE NOTE 6 ON S-01)

REPAIR QUANTITIES		
ITEM	UNIT	QUANTITY
DRY CRACKS	LF	1.4
WET CRACKS	LF	119.6
SPALLS	SF	38.5
SPALLS W/EXPOSED REBAR	SF	0.0
GUNITE REMOVAL	SF	3847.9
ROADWAY SLAB	SF	6.0
ROADWAY CURB	SF	0.0
SHOTCRETE PLACEMENT	CY	1.5

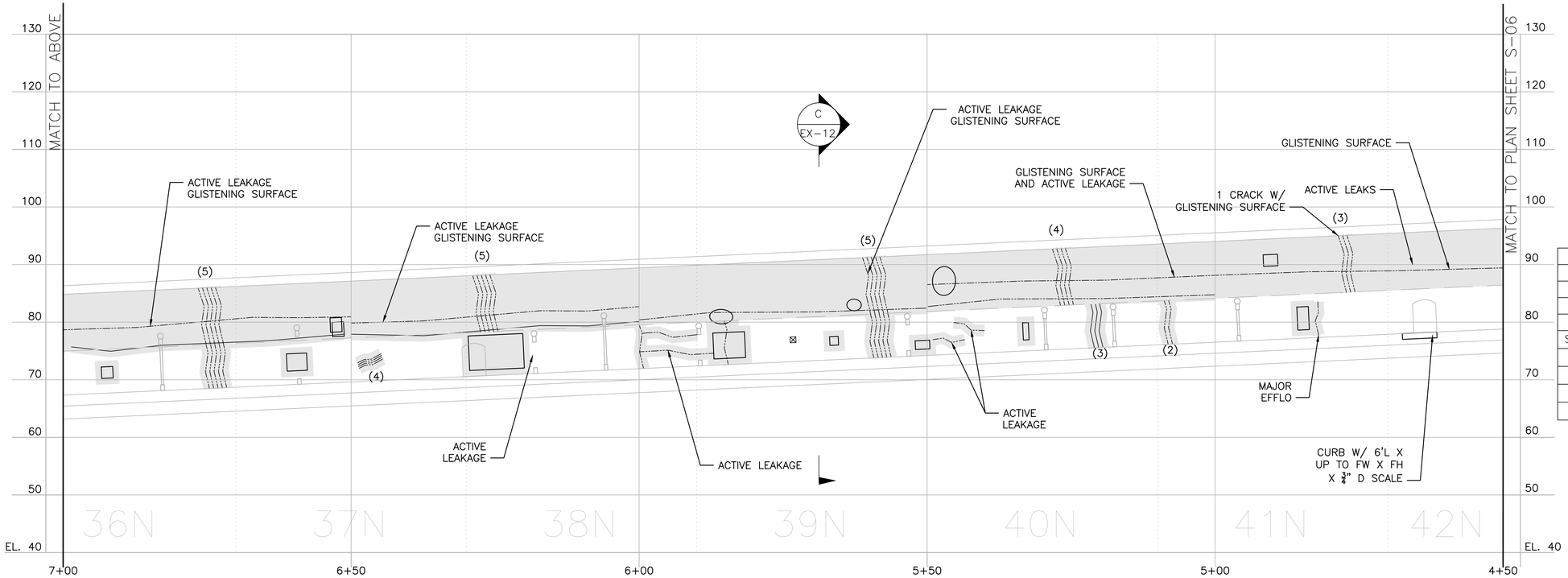

REPAIR QUANTITIES		
ITEM	UNIT	QUANTITY
DRY CRACKS	LF	0.0
WET CRACKS	LF	314.9
SPALLS	SF	48.2
SPALLS W/EXPOSED REBAR	SF	0.0
GUNITE REMOVAL	SF	4820.0
ROADWAY SLAB	SF	0.0
ROADWAY CURB	SF	12.0
SHOTCRETE PLACEMENT	CY	2.0

WSP USA INC.
100 SUMMER STREET, 13TH FLOOR
BOSTON, MA. 02110
166 VALLEY STREET, BUILDING 5,
PROVIDENCE, RI 02909
WWW.WSP.COM

RHODE ISLAND PUBLIC TRANSIT AUTHORITY

RHODE ISLAND
PUBLIC TRANSIT AUTHORITY

SCALE: 1"=10'
GRAPHIC SCALE

REVISIONS			REVISIONS		
NO.	DATE	BY	NO.	DATE	BY

EAST SIDE TUNNEL REHABILITATION
PROVIDENCE RHODE ISLAND
STRUCTURAL REPAIR ELEVATION 4 - LOOKING NORTH

DESIGNED BY: HPM
CHECKED BY: SCQ
DATE: 06/30/2023
PLAN NO.: S-05
SHEET: 21 OF: 81

TPROFILE002B.dwg

SHEET NOTES:

1. REMOVE EXISTING PAINT ON GUARDRAIL AND REPAINT. SEE CODES 201.9902 – SELECTIVE DEMOLITION AND 842.9901 – PAINTING FOR ADDITIONAL INFORMATION.

KEY PLAN
N.T.S.

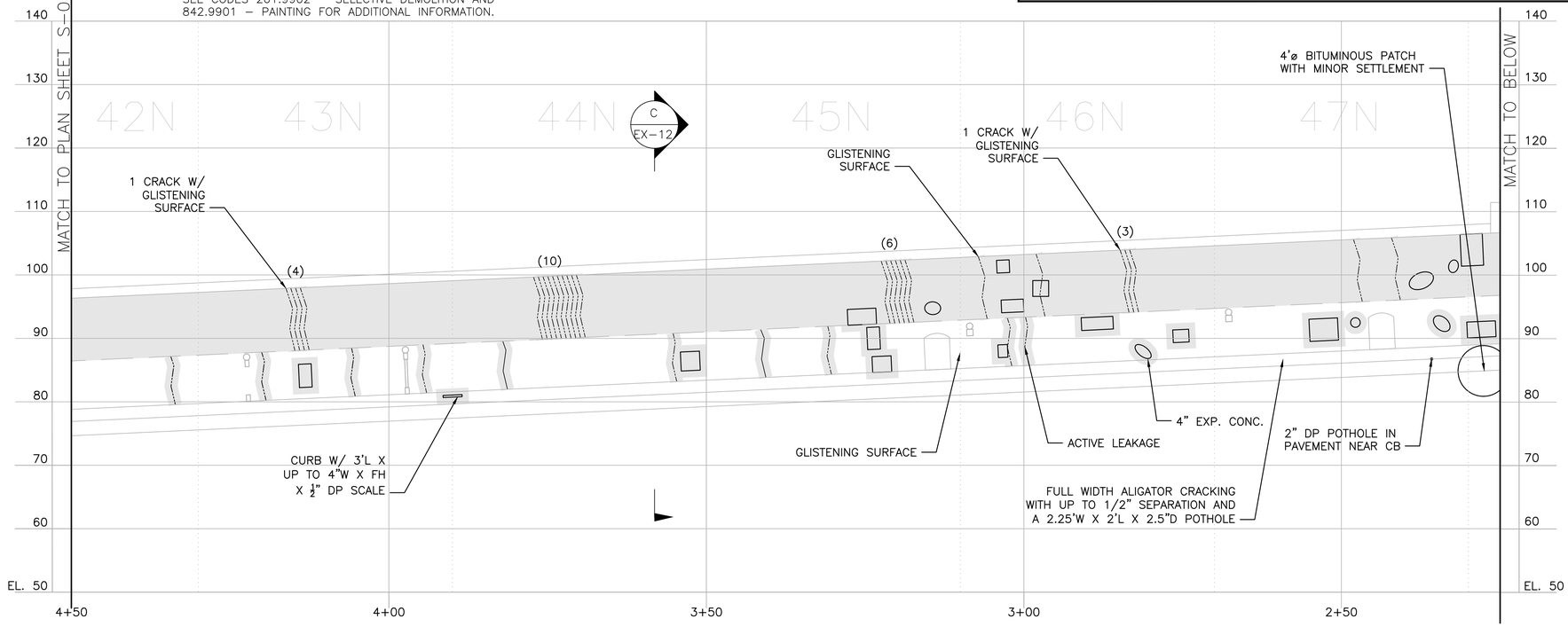

REPAIR LEGEND
CRACKS:
DRY
WET
GUNITE REMOVAL
SPALL REPAIR (S1/S2)
SPALL REPAIR (S3/S4)
DELAMINATION (SEE NOTE 6 ON S-01)

REPAIR QUANTITIES		
ITEM	UNIT	QUANTITY
DRY CRACKS	LF	1.4
WET CRACKS	LF	140.6
SPALLS	SF	42.5
SPALLS W/EXPOSED REBAR	SF	0.0
GUNITE REMOVAL	SF	4252.3
ROADWAY SLAB	SF	25.8
ROADWAY CURB	SF	6.0
SHOTCRETE PLACEMENT	CY	1.2

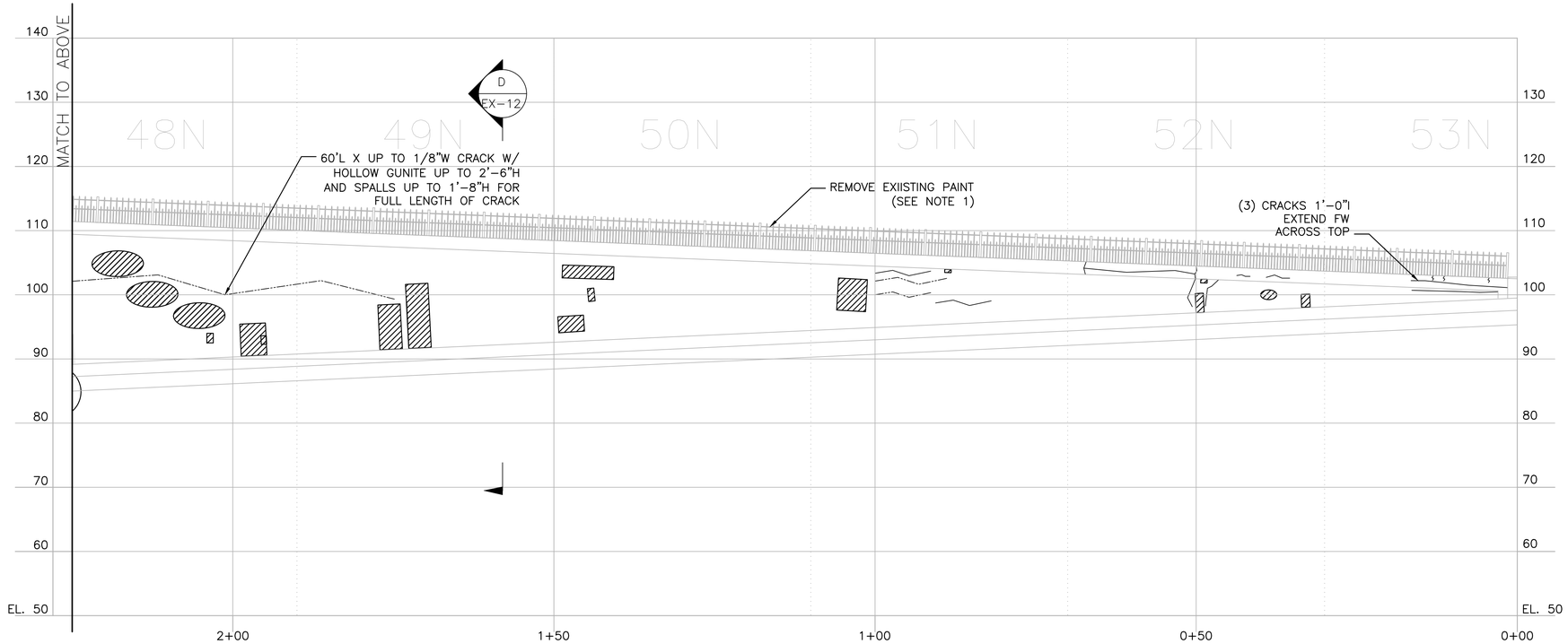

REPAIR QUANTITIES		
ITEM	UNIT	QUANTITY
DRY CRACKS	LF	112.5
WET CRACKS	LF	15.0
SPALLS	SF	216.0
SPALLS W/EXPOSED REBAR	SF	0.0
GUNITE REMOVAL	SF	0.0
ROADWAY SLAB	SF	0.0
ROADWAY CURB	SF	0.0
SHOTCRETE PLACEMENT	CY	0.0

WSP USA INC.
100 SUMMER STREET, 13TH FLOOR
BOSTON, MA. 02110
166 VALLEY STREET, BUILDING 5,
PROVIDENCE, RI 02909
WWW.WSP.COM

RHODE ISLAND PUBLIC TRANSIT AUTHORITY

RHODE ISLAND
PUBLIC TRANSIT AUTHORITY

SCALE: 1"=10'
GRAPHIC SCALE

REVISIONS			REVISIONS		
NO.	DATE	BY	NO.	DATE	BY

EAST SIDE TUNNEL REHABILITATION
PROVIDENCE RHODE ISLAND
STRUCTURAL REPAIR ELEVATION 5 - LOOKING NORTH

DESIGNED BY: HPM
CHECKED BY: SCQ
DATE: 06/30/2023
PLAN NO.: S-06
SHEET: 22 OF: 81

TPROFILE002C.dwg

SHEET NOTES:

1. REMOVE EXISTING PAINT ON GUARDRAIL AND REPAINT. SEE CODES 201.9902 – SELECTIVE DEMOLITION AND 842.9901 – PAINTING FOR ADDITIONAL INFORMATION.

KEY PLAN
N.T.S.

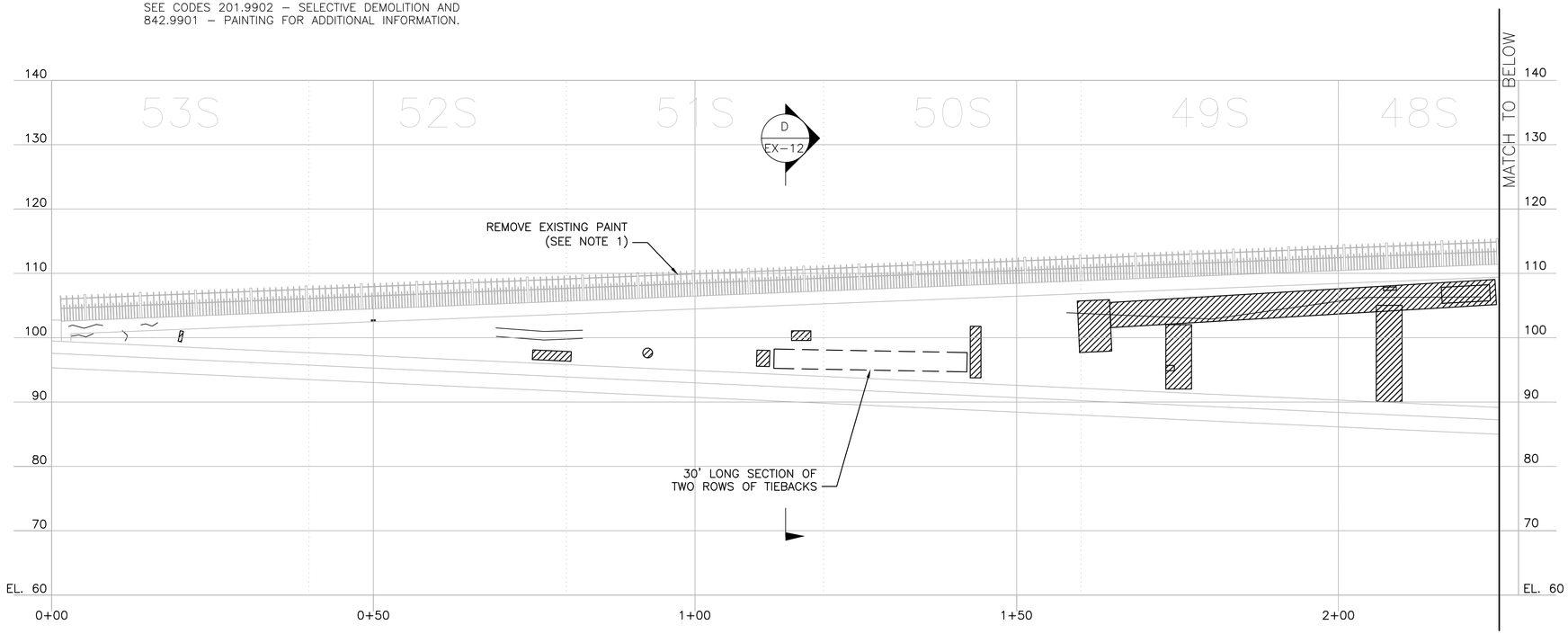

REPAIR LEGEND
CRACKS:
DRY
WET
GUNITE REMOVAL
SPALL REPAIR (S1/S2)
SPALL REPAIR (S3/S4)
DELAMINATION (SEE NOTE 6 ON S-01)

REPAIR QUANTITIES		
ITEM	UNIT	QUANTITY
DRY CRACKS	LF	103
WET CRACKS	LF	0.0
SPALLS	SF	422.5
SPALLS W/EXPOSED REBAR	SF	0.0
GUNITE REMOVAL	SF	0.0
ROADWAY SLAB	SF	0.0
ROADWAY CURB	SF	0.0
SHOTCRETE PLACEMENT	CY	0.0

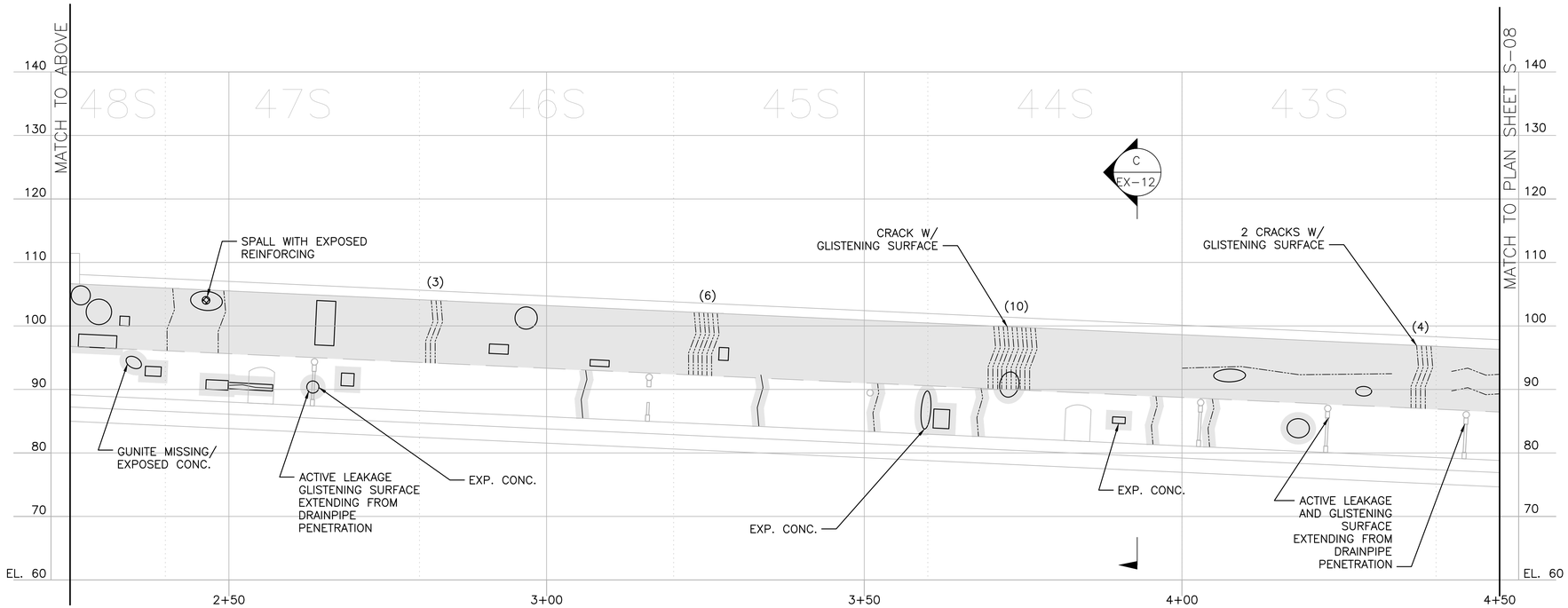

REPAIR QUANTITIES		
ITEM	UNIT	QUANTITY
DRY CRACKS	LF	1.4
WET CRACKS	LF	16.8
SPALLS	SF	41.8
SPALLS W/EXPOSED REBAR	SF	1.0
GUNITE REMOVAL	SF	4178.3
ROADWAY SLAB	SF	0.0
ROADWAY CURB	SF	0.0
SHOTCRETE PLACEMENT	CY	0.7

WSP USA INC.
100 SUMMER STREET, 13TH FLOOR
BOSTON, MA. 02110
166 VALLEY STREET, BUILDING 5,
PROVIDENCE, RI 02909
WWW.WSP.COM

RHODE ISLAND PUBLIC TRANSIT AUTHORITY

RHODE ISLAND
PUBLIC TRANSIT AUTHORITY

SCALE: 1"=10'
GRAPHIC SCALE

REVISIONS			REVISIONS		
NO.	DATE	BY	NO.	DATE	BY

EAST SIDE TUNNEL REHABILITATION
PROVIDENCE RHODE ISLAND
STRUCTURAL REPAIR ELEVATION 6 - LOOKING SOUTH

DESIGNED BY: HPM
CHECKED BY: SCQ
DATE: 06/30/2023
PLAN NO.: S-07
SHEET: 23 OF: 81

TPROFILE003A.dwg

KEY PLAN
N.T.S.

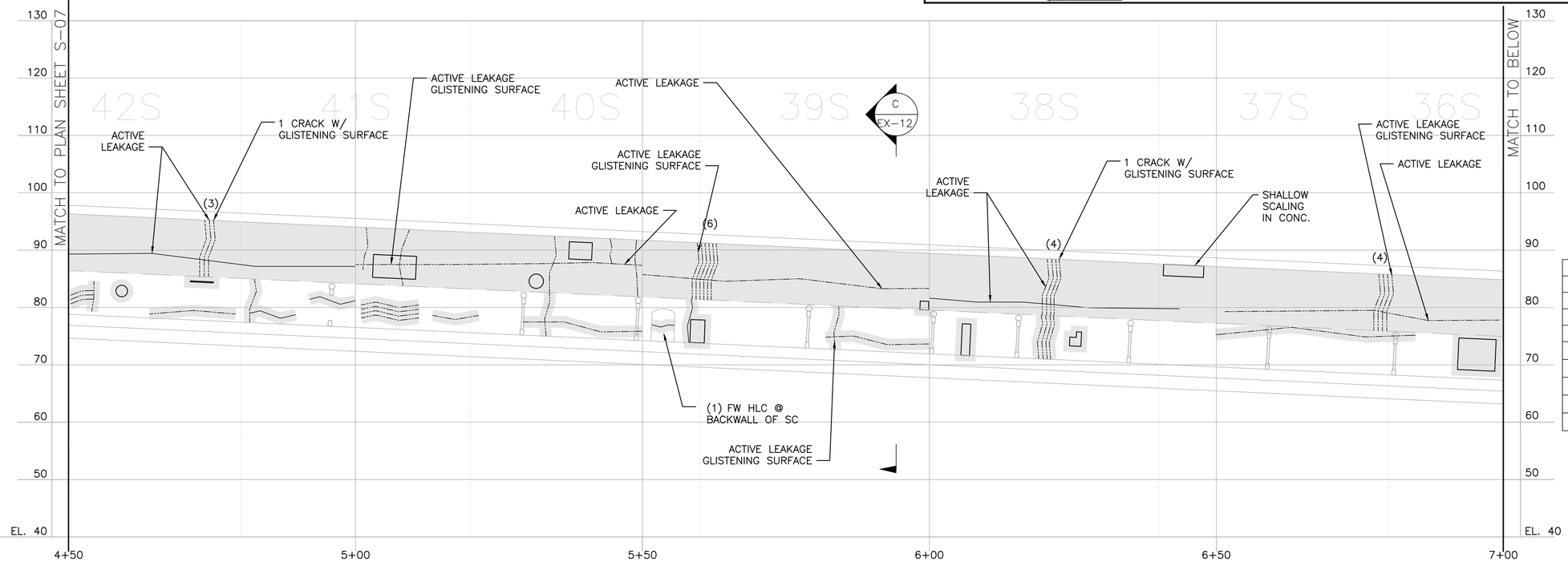

REPAIR LEGEND
CRACKS:
DRY
WET
GUNITE REMOVAL
SPALL REPAIR (S1/S2)
SPALL REPAIR (S3/S4)
DELAMINATION (SEE NOTE 6 ON S-01)

REPAIR QUANTITIES		
ITEM	UNIT	QUANTITY
DRY CRACKS	LF	0.4
WET CRACKS	LF	38.0
SPALLS	SF	48.4
SPALLS W/EXPOSED REBAR	SF	0.0
GUNITE REMOVAL	SF	4839.5
ROADWAY SLAB	SF	0.0
ROADWAY CURB	SF	0.0
SHOTCRETE PLACEMENT	CY	2.1

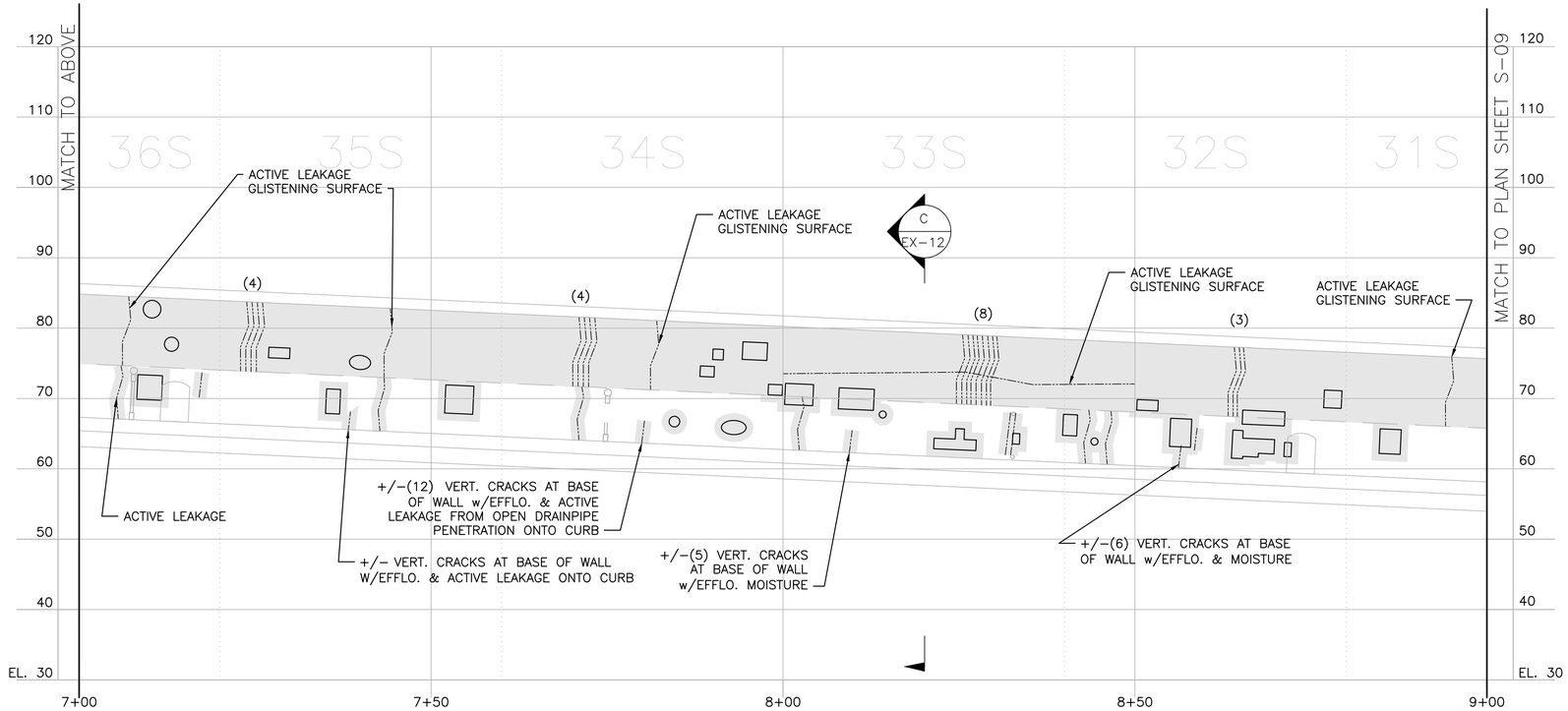

REPAIR QUANTITIES		
ITEM	UNIT	QUANTITY
DRY CRACKS	LF	0.0
WET CRACKS	LF	28.7
SPALLS	SF	39.9
SPALLS W/EXPOSED REBAR	SF	0.0
GUNITE REMOVAL	SF	3991.3
ROADWAY SLAB	SF	0.0
ROADWAY CURB	SF	0.0
SHOTCRETE PLACEMENT	CY	2.4

WSP USA INC.
100 SUMMER STREET, 13TH FLOOR
BOSTON, MA. 02110
166 VALLEY STREET, BUILDING 5,
PROVIDENCE, RI 02909
WWW.WSP.COM

RHODE ISLAND PUBLIC TRANSIT AUTHORITY

RHODE ISLAND
PUBLIC TRANSIT AUTHORITY

SCALE: 1"=10'
GRAPHIC SCALE

REVISIONS			REVISIONS		
NO.	DATE	BY	NO.	DATE	BY

EAST SIDE TUNNEL REHABILITATION
PROVIDENCE RHODE ISLAND
STRUCTURAL REPAIR ELEVATION 7 - LOOKING SOUTH

DESIGNED BY: HPM
CHECKED BY: SCQ
DATE: 06/30/2023
PLAN NO.: S-08
SHEET: 24 OF: 81

TPROFILE003B.dwg

KEY PLAN
N.T.S.

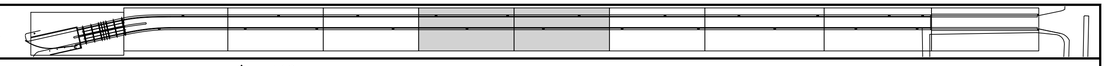

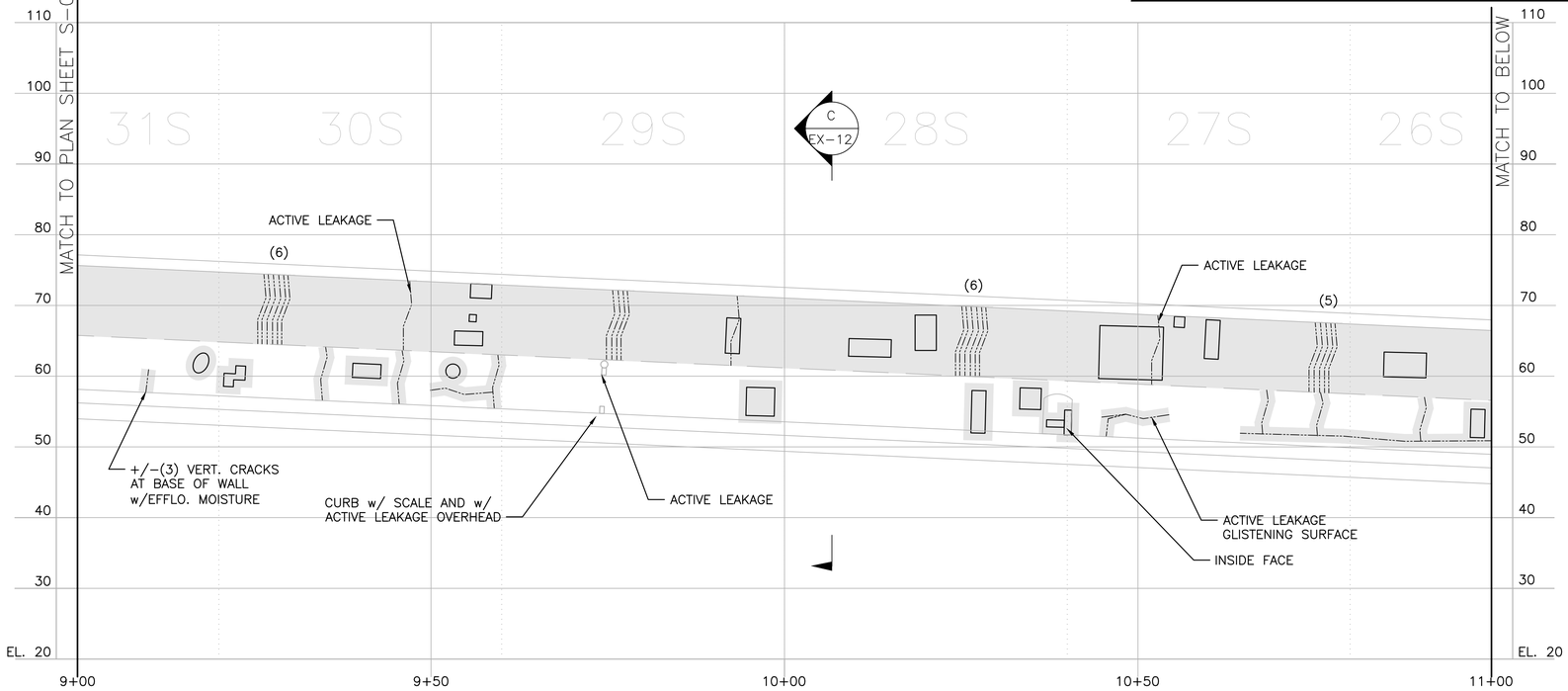

REPAIR LEGEND
CRACKS:
DRY
WET
GUNITE REMOVAL
SPALL REPAIR (S1/S2)
SPALL REPAIR (S3/S4)
DELAMINATION (SEE NOTE 6 ON S-01)

REPAIR QUANTITIES		
ITEM	UNIT	QUANTITY
DRY CRACKS	LF	0.0
WET CRACKS	LF	20.8
SPALLS	SF	38.0
SPALLS W/EXPOSED REBAR	SF	0.0
GUNITE REMOVAL	SF	3796.0
ROADWAY SLAB	SF	0.0
ROADWAY CURB	SF	30.0
SHOTCRETE PLACEMENT	CY	1.2

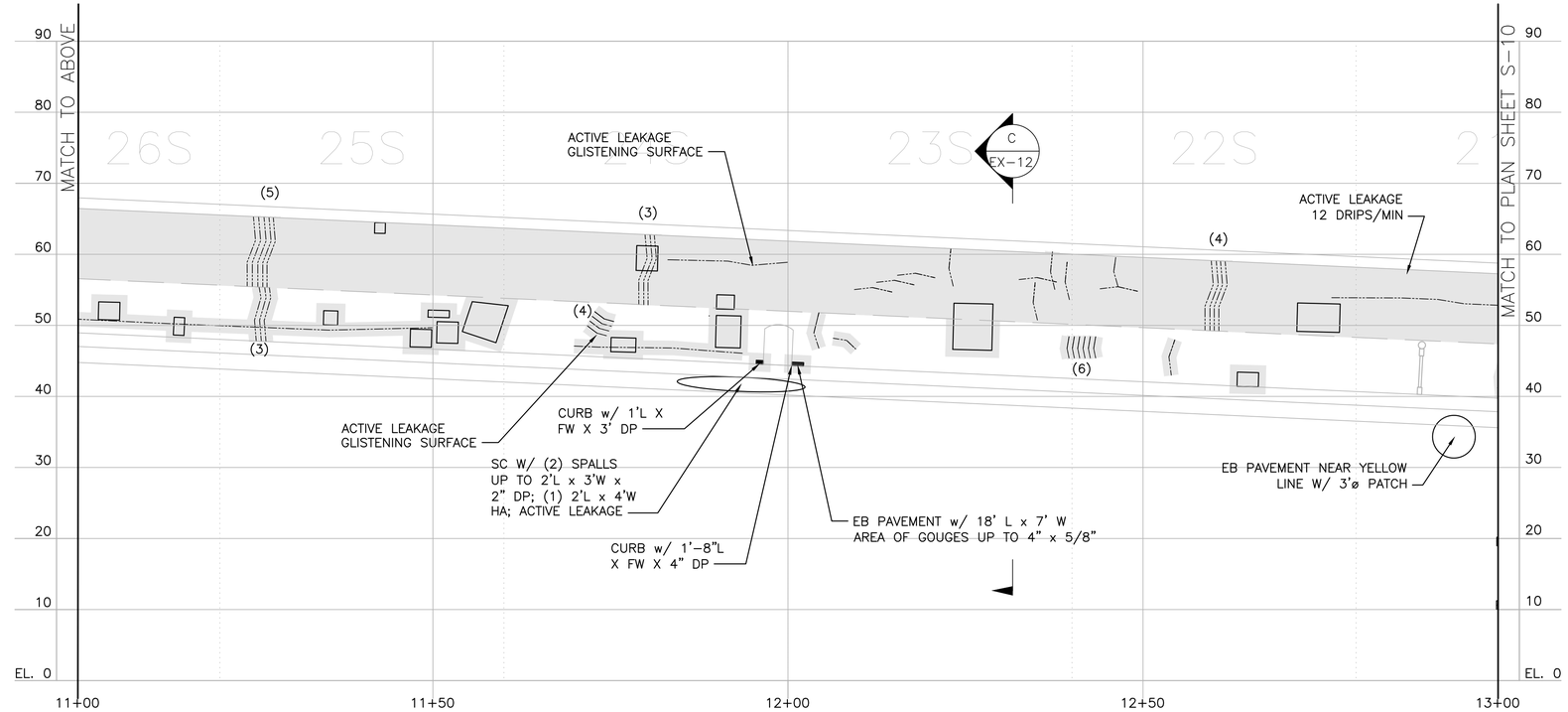

REPAIR QUANTITIES		
ITEM	UNIT	QUANTITY
DRY CRACKS	LF	0.0
WET CRACKS	LF	26.3
SPALLS	SF	39.6
SPALLS W/EXPOSED REBAR	SF	0.0
GUNITE REMOVAL	SF	3962.6
ROADWAY SLAB	SF	135.0
ROADWAY CURB	SF	5.3
SHOTCRETE PLACEMENT	CY	2.1

WSP USA INC.
100 SUMMER STREET, 13TH FLOOR
BOSTON, MA. 02110
166 VALLEY STREET, BUILDING 5,
PROVIDENCE, RI 02909
WWW.WSP.COM

RHODE ISLAND PUBLIC TRANSIT AUTHORITY

RHODE ISLAND
PUBLIC TRANSIT AUTHORITY

SCALE: 1"=10'
GRAPHIC SCALE

REVISIONS			REVISIONS		
NO.	DATE	BY	NO.	DATE	BY

EAST SIDE TUNNEL REHABILITATION
PROVIDENCE RHODE ISLAND
STRUCTURAL REPAIR ELEVATION 8 - LOOKING SOUTH

DESIGNED BY: HPM
CHECKED BY: SCQ
DATE: 06/30/2023
PLAN NO.: S-09
SHEET: 25 OF: 81

TPROFILE004A.dwg

KEY PLAN
N.T.S.

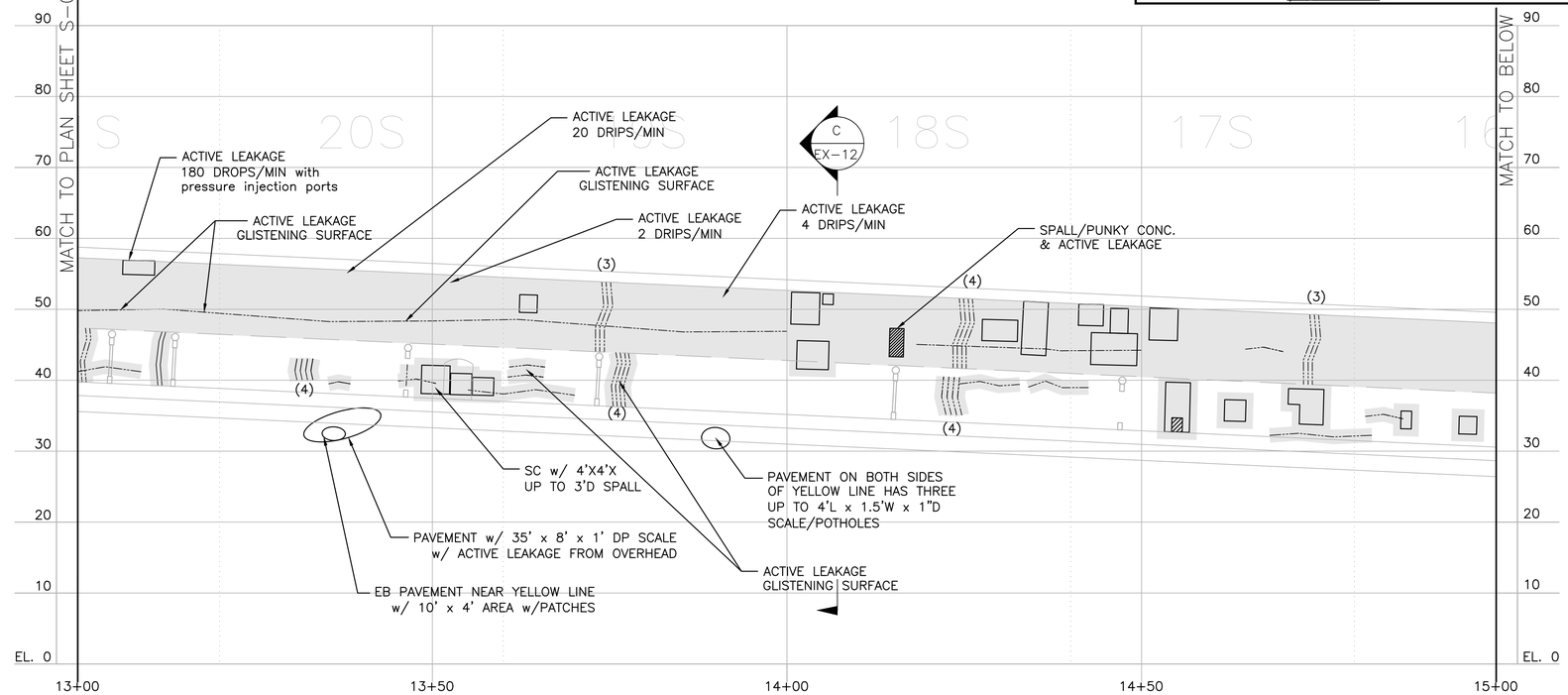

REPAIR LEGEND
CRACKS:
DRY
WET
GUNITE REMOVAL
SPALL REPAIR (S1/S2)
SPALL REPAIR (S3/S4)
DELAMINATION (SEE NOTE 6 ON S-01)

REPAIR QUANTITIES		
ITEM	UNIT	QUANTITY
DRY CRACKS	LF	0.0
WET CRACKS	LF	25.4
SPALLS	SF	39.7
SPALLS W/EXPOSED REBAR	SF	0.0
GUNITE REMOVAL	SF	3967.0
ROADWAY SLAB	SF	329.0
ROADWAY CURB	SF	0.0
SHOTCRETE PLACEMENT	CY	2.1

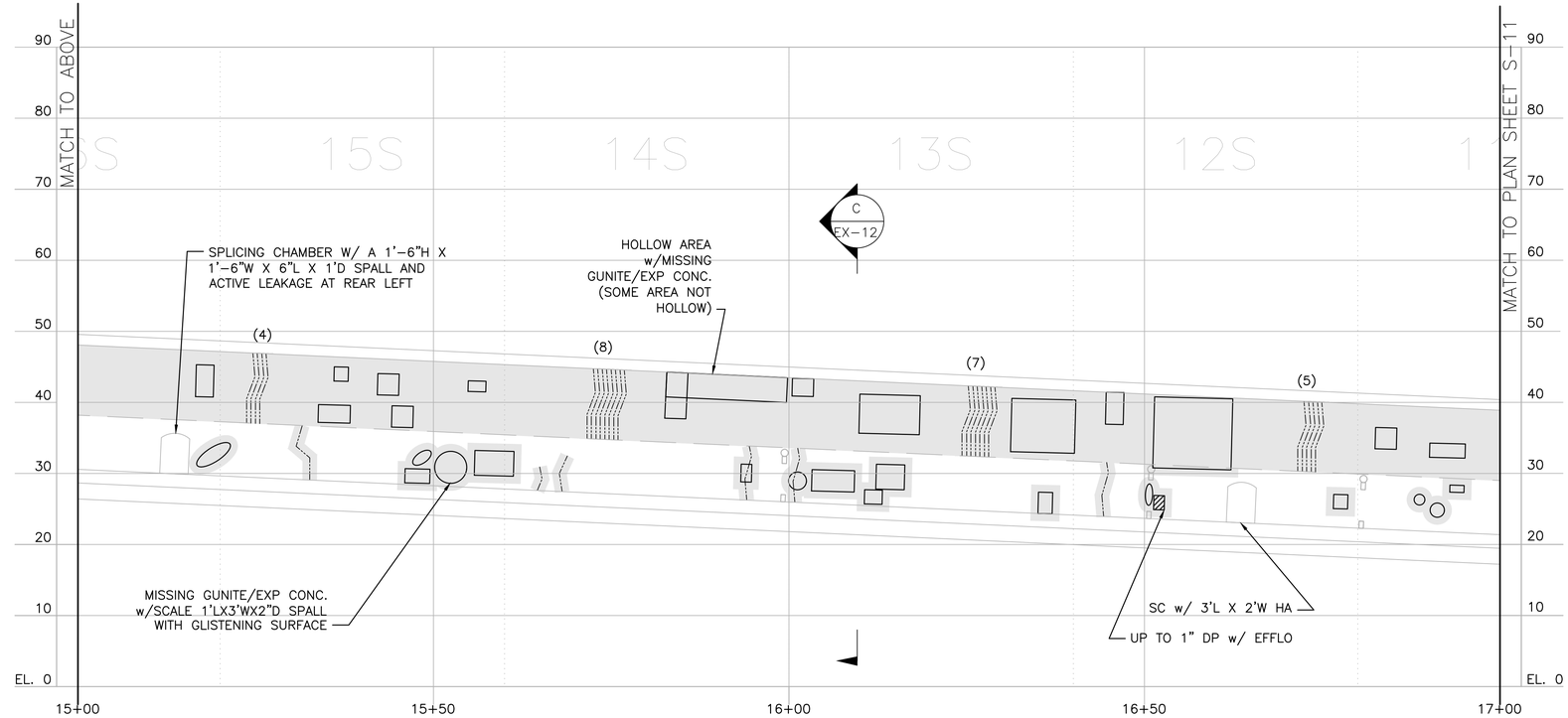

REPAIR QUANTITIES		
ITEM	UNIT	QUANTITY
DRY CRACKS	LF	0.0
WET CRACKS	LF	15.6
SPALLS	SF	38.2
SPALLS W/EXPOSED REBAR	SF	0.0
GUNITE REMOVAL	SF	3819.0
ROADWAY SLAB	SF	0.0
ROADWAY CURB	SF	0.0
SHOTCRETE PLACEMENT	CY	1.3

WSP USA INC.
100 SUMMER STREET, 13TH FLOOR
BOSTON, MA. 02110
166 VALLEY STREET, BUILDING 5,
PROVIDENCE, RI 02909
WWW.WSP.COM

RHODE ISLAND PUBLIC TRANSIT AUTHORITY

RHODE ISLAND
PUBLIC TRANSIT AUTHORITY

SCALE: 1"=10'
GRAPHIC SCALE

REVISIONS			REVISIONS		
NO.	DATE	BY	NO.	DATE	BY

EAST SIDE TUNNEL REHABILITATION
PROVIDENCE RHODE ISLAND
STRUCTURAL REPAIR ELEVATION 9 - LOOKING SOUTH

DESIGNED BY: HPM
CHECKED BY: SCQ
DATE: 06/30/2023
PLAN NO.: S-10
SHEET: 26 OF: 81

TPROFILE004B.dwg

KEY PLAN
N.T.S.

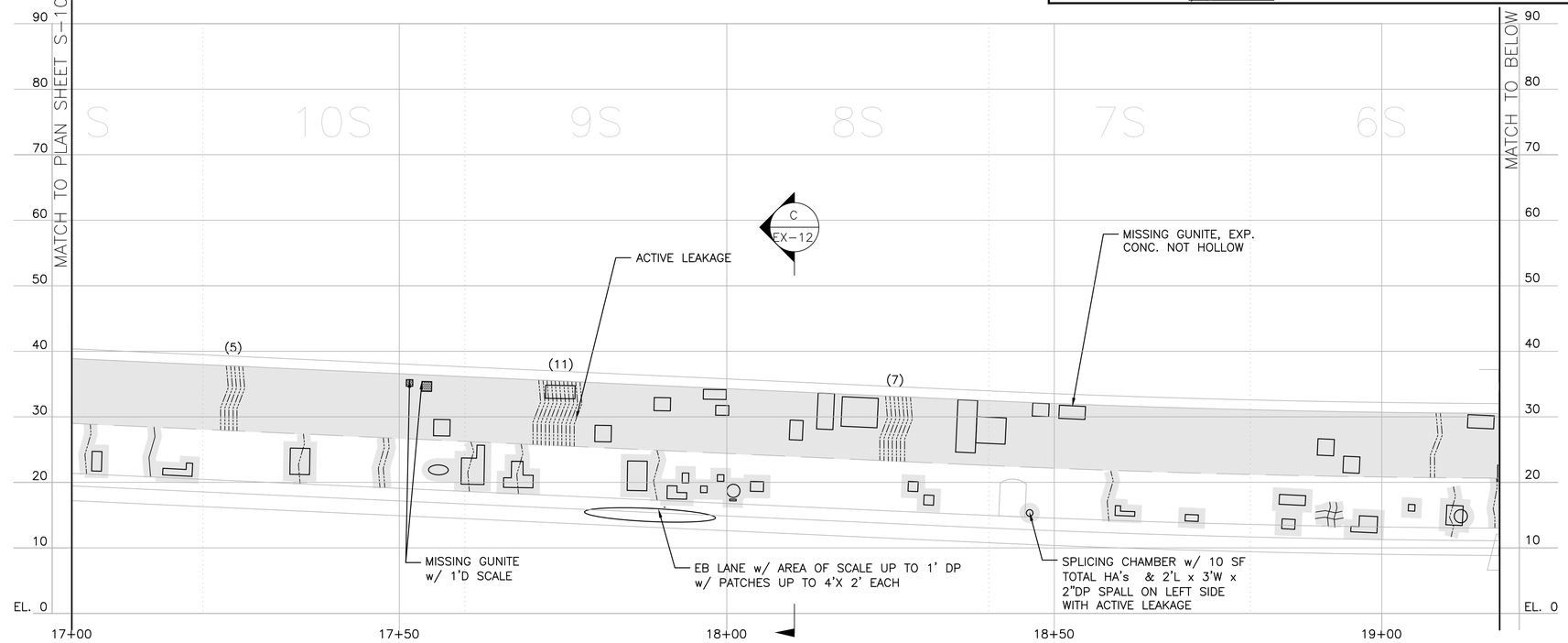

REPAIR LEGEND
CRACKS:
DRY
WET
GUNITE REMOVAL
SPALL REPAIR (S1/S2)
SPALL REPAIR (S3/S4)
DELAMINATION (SEE NOTE 6 ON S-01)

REPAIR QUANTITIES		
ITEM	UNIT	QUANTITY
DRY CRACKS	LF	0.7
WET CRACKS	LF	19.5
SPALLS	SF	42.2
SPALLS W/EXPOSED REBAR	SF	0.0
GUNITE REMOVAL	SF	4221.6
ROADWAY SLAB	SF	80.0
ROADWAY CURB	SF	0.0
SHOTCRETE PLACEMENT	CY	1.8

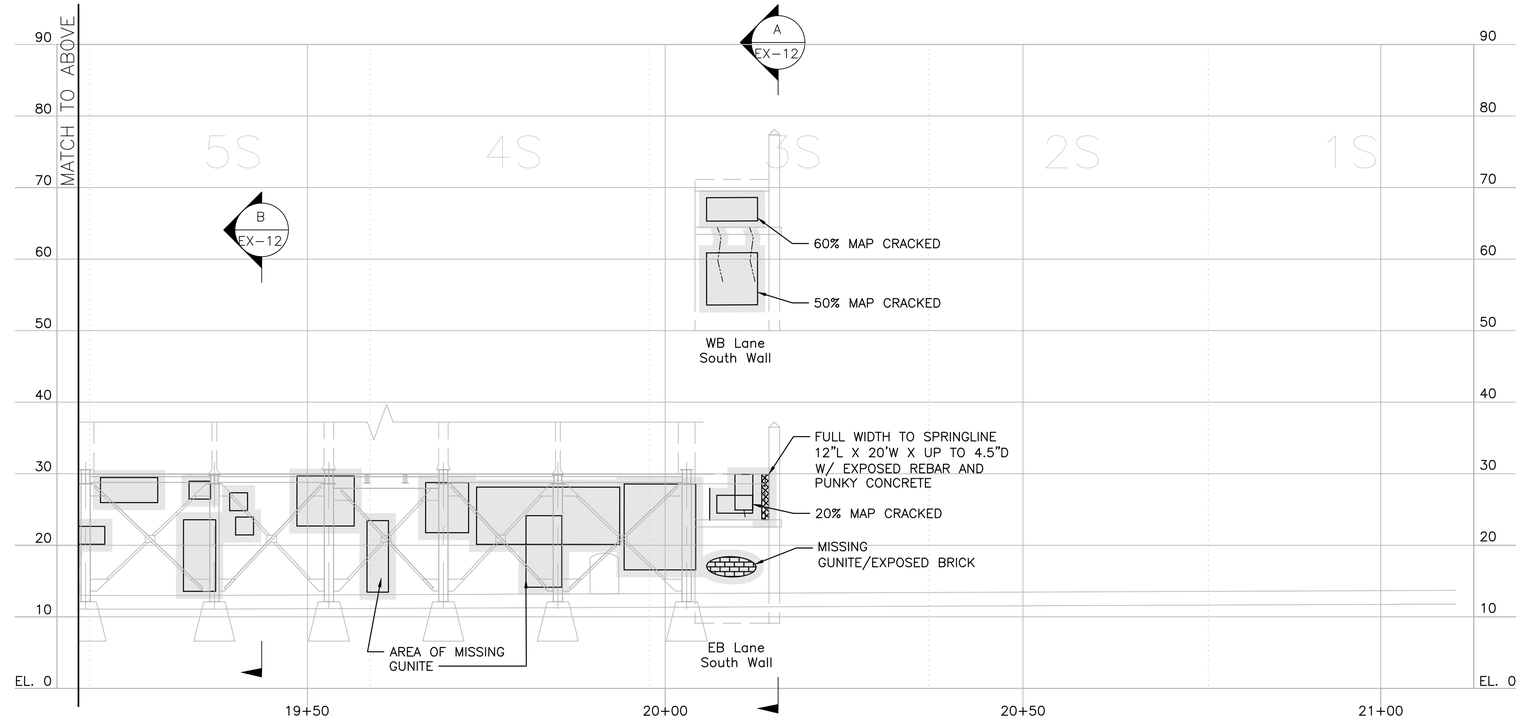

REPAIR QUANTITIES		
ITEM	UNIT	QUANTITY
DRY CRACKS	LF	0.0
WET CRACKS	LF	1.0
SPALLS	SF	8.1
SPALLS W/EXPOSED REBAR	SF	10.0
GUNITE REMOVAL	SF	814.0
ROADWAY SLAB	SF	0.0
ROADWAY CURB	SF	0.0
SHOTCRETE PLACEMENT	CY	4.9

WSP USA INC.
100 SUMMER STREET, 13TH FLOOR
BOSTON, MA. 02110
166 VALLEY STREET, BUILDING 5,
PROVIDENCE, RI 02909
WWW.WSP.COM

RHODE ISLAND PUBLIC TRANSIT AUTHORITY

RHODE ISLAND
PUBLIC TRANSIT AUTHORITY

SCALE: 1"=10'
GRAPHIC SCALE

REVISIONS			REVISIONS		
NO.	DATE	BY	NO.	DATE	BY

EAST SIDE TUNNEL REHABILITATION
PROVIDENCE RHODE ISLAND
STRUCTURAL REPAIR ELEVATION 10-LOOKING SOUTH

DESIGNED BY: HPM
CHECKED BY: SCQ
DATE: 06/30/2023
PLAN NO.: S-11
SHEET: 27 OF: 81

TPROFILE004C.dwg

REPAIR LEGEND

CRACKS:
- DRY
- WET

GUNITE REMOVAL

SPALL REPAIR (S1/S2)

SPALL REPAIR (S3/S4)

DELAMINATION (SEE NOTE 6 ON S-01)

SHEET NOTES:

1. ENTIRE BRICK WALL SHALL BE RAKED AND REPOINTED. REFER TO SPECIFICATION SECTION 807.0350 MASONRY CLEANING, REPAIRING, AND REPOINTING FOR BRICK REPAIR AND CLEANING WORK.

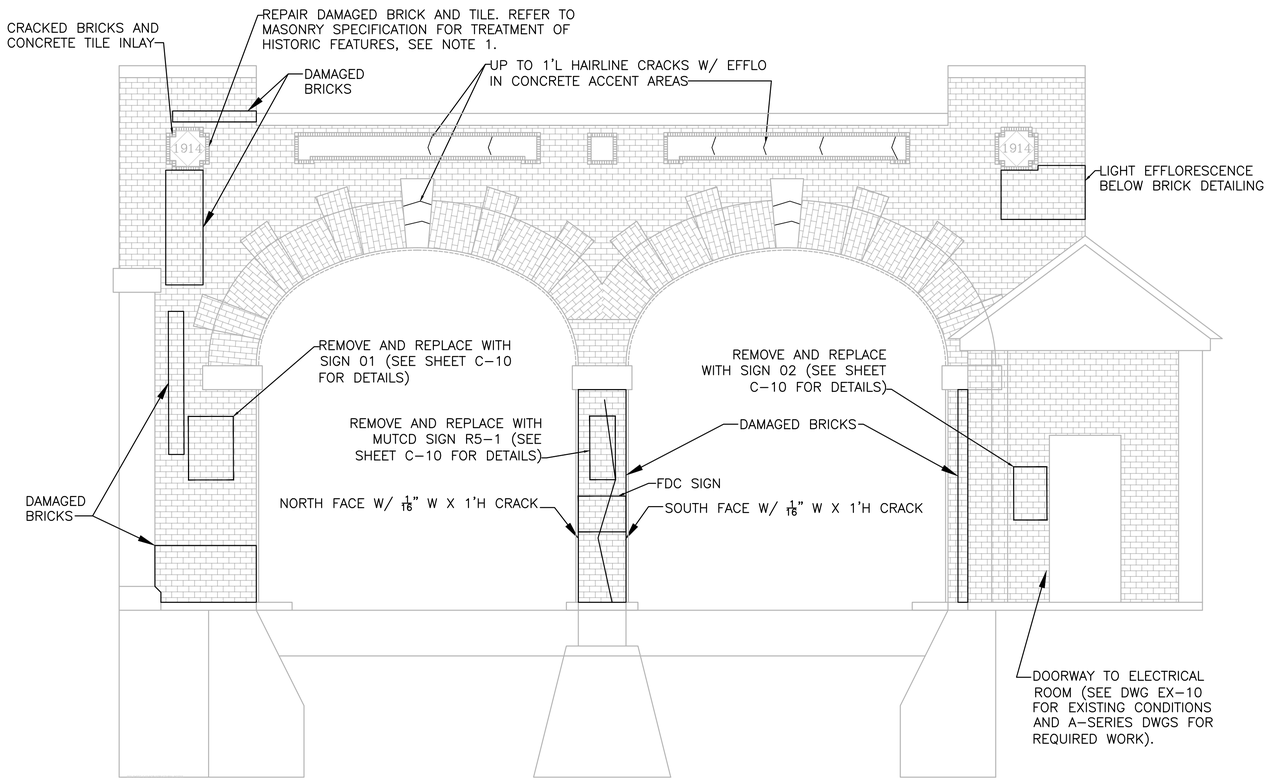

WEST PORTAL
N.T.S.

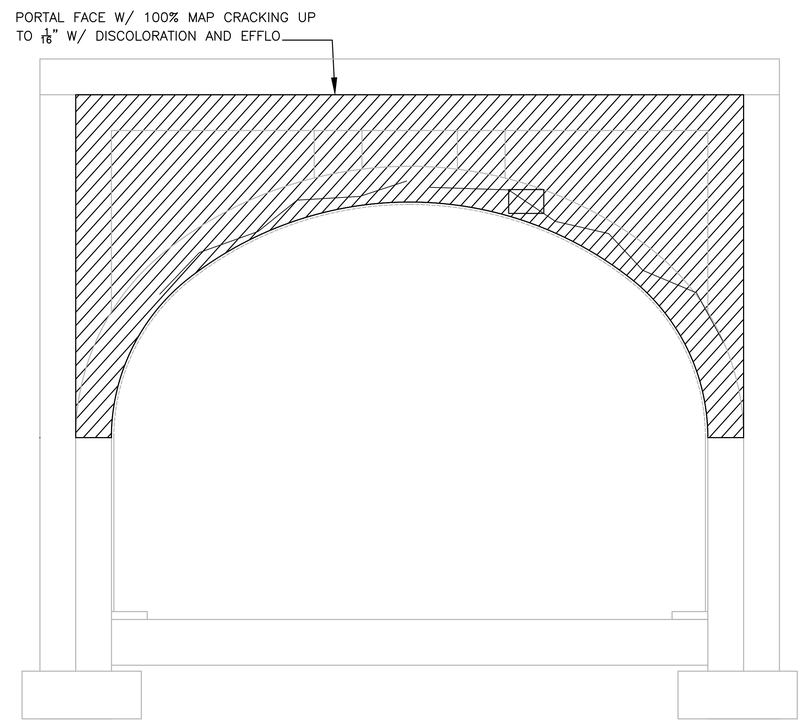

EAST PORTAL
N.T.S.

REPAIR QUANTITIES		
ITEM	UNIT	QUANTITY
DRY CRACKS	LF	6.5
WET CRACKS	LF	10.0
SPALLS	SF	0.0
SPALLS W/EXPOSED REBAR	SF	0.0
BRICK REPAIR	SF	52.2
BRICK CLEANING	SF	282.6
BRICK REPOINTING	LF	1695.3

REPAIR QUANTITIES		
ITEM	UNIT	QUANTITY
DRY CRACKS	LF	12.0
WET CRACKS	LF	15.0
SPALLS	SF	208.3
SPALLS W/EXPOSED REBAR	SF	0.0

WSP USA INC.
100 SUMMER STREET, 13TH FLOOR
BOSTON, MA. 02110
166 VALLEY STREET, BUILDING 5,
PROVIDENCE, RI 02909
WWW.WSP.COM

RHODE ISLAND PUBLIC TRANSIT AUTHORITY

RHODE ISLAND
PUBLIC TRANSIT AUTHORITY

SCALE: NOT TO SCALE

REVISIONS			REVISIONS		
NO.	DATE	BY	NO.	DATE	BY

EAST SIDE TUNNEL REHABILITATION

PROVIDENCE RHODE ISLAND

PORTAL REPAIRS

DESIGNED BY: HPM
CHECKED BY: SCQ
DATE: 06/30/2023
PLAN NO.: S-12
SHEET: 28 OF: 81

TPORTAL-REPAIRS.dwg

SHEET NOTES:

1. ENTIRE BRICK WALL SHALL BE RAKED AND REPOINTED. REFER TO SPECIFICATION SECTION 807.0350 MASONRY CLEANING, REPAIRING, AND REPORTING FOR BRICK REPAIR AND CLEANING WORK.
2. RAKE AND REPOINT ENTIRE INTERIOR AND EXTERIOR FACE BRICK AT THE ELECTRICAL ROOM.
3. PAINT ELECTRICAL ROOM CEILING, AND INTERIOR WALLS. REFER TO SPECIFICATION SECTION 842.9901.

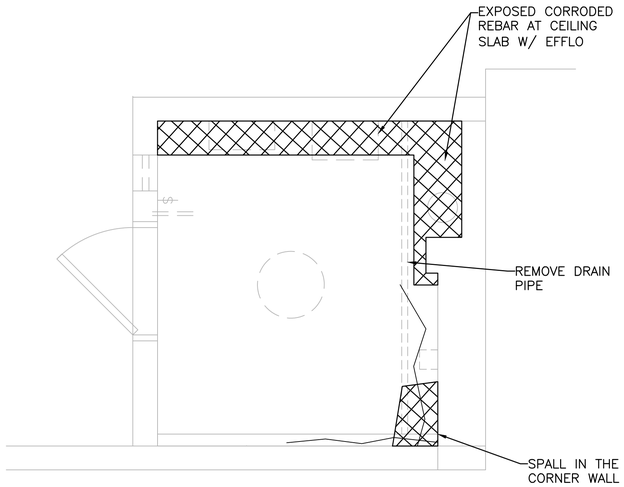

ELECTRICAL ROOM ROOF PLAN
SCALE: 1/2" = 1'

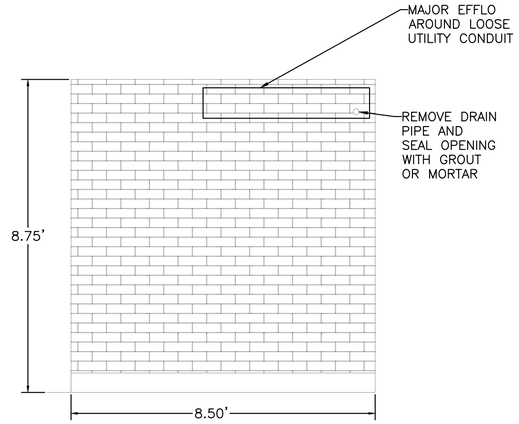

NORTH INTERIOR WALL ELEVATION
SCALE: 1/2" = 1'

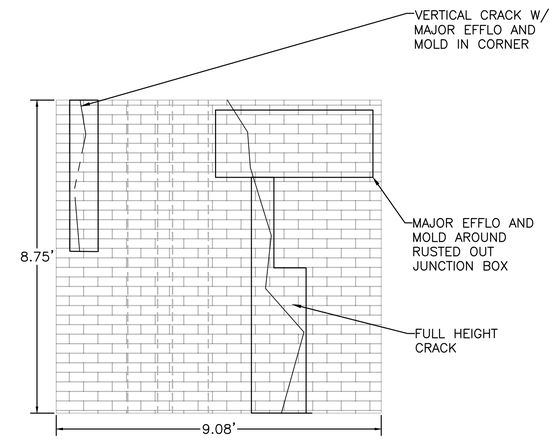

EAST INTERIOR WALL ELEVATION
SCALE: 1/2" = 1'

REPAIR LEGEND

CRACKS:
- DRY
- WET

GUNITE REMOVAL

SPALL REPAIR (S1/S2)

SPALL REPAIR (S3/S4)

DELAMINATION (SEE NOTE 6 ON S-01)

REPAIR QUANTITIES		
ITEM	UNIT	QUANTITY
DRY CRACKS	LF	17.3
WET CRACKS	LF	4.8
SPALLS	SF	2.0
SPALLS W/EXPOSED REBAR	SF	10.2
REINFORCED CONCRETE SLAB	CY	1.20
BRICK REPAIR	SF	33.5
BRICK CLEANING	SF	231.7
BRICK REPOINTING	LF	1390.1

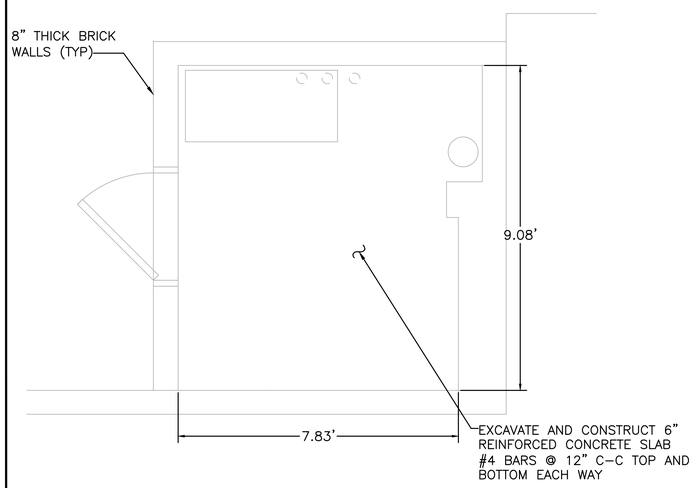

ELECTRICAL ROOM INVERT PLAN
SCALE: 1/2" = 1'

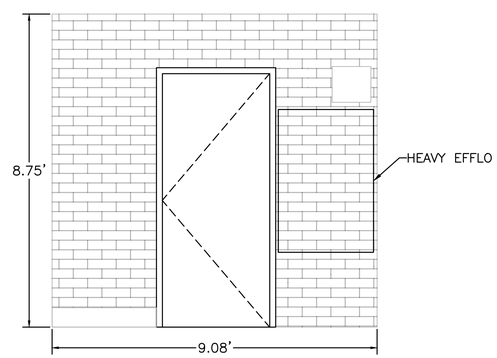

WEST INTERIOR WALL ELEVATION
SCALE: 1/2" = 1'

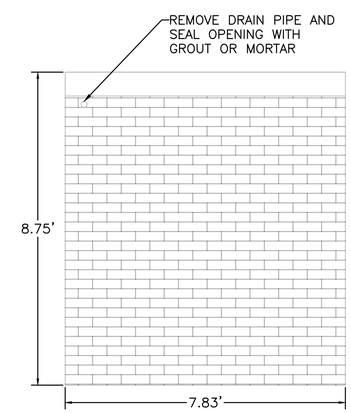

SOUTH INTERIOR WALL ELEVATION
SCALE: 1/2" = 1'

WSP USA INC.
100 SUMMER STREET, 13TH FLOOR
BOSTON, MA. 02110
166 VALLEY STREET, BUILDING 5,
PROVIDENCE, RI 02909
WWW.WSP.COM

RHODE ISLAND PUBLIC TRANSIT AUTHORITY

RHODE ISLAND
PUBLIC TRANSIT AUTHORITY

SCALE: 1/2"=1'
GRAPHIC SCALE

REVISIONS			REVISIONS		
NO.	DATE	BY	NO.	DATE	BY

EAST SIDE TUNNEL REHABILITATION

PROVIDENCE RHODE ISLAND

ELECTRICAL ROOM REPAIR PLAN SHEET 1 OF 2

DESIGNED BY: HPM
CHECKED BY: SCQ
DATE: 06/30/2023
PLAN NO.: S-13
SHEET: 29 OF: 81

TDETAIL-02.dwg

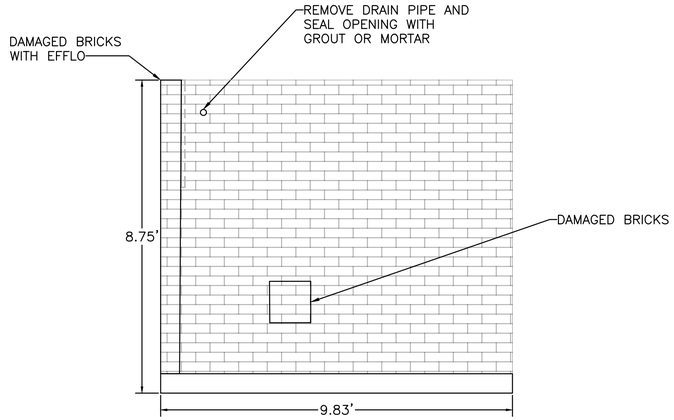

NORTH EXTERIOR WALL ELEVATION

SCALE: 1/2" = 1'

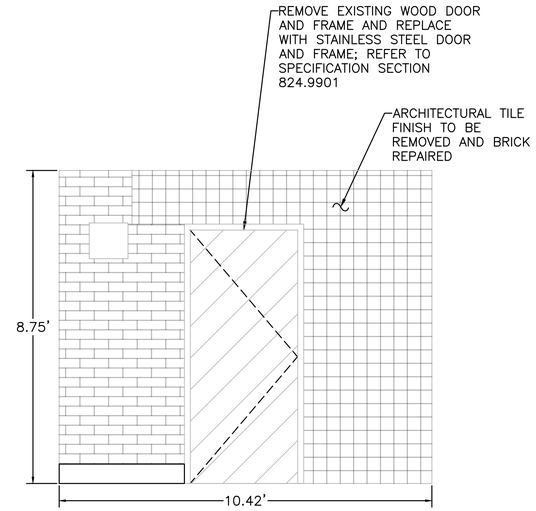

WEST EXTERIOR WALL ELEVATION

SCALE: 1/2" = 1'

SHEET NOTES:

1. ENTIRE BRICK WALL SHALL BE RAKED AND REPOINTED. REFER TO SPECIFICATION SECTION 807.0350 MASONRY CLEANING, REPAIRING, AND REPOINTING FOR BRICK REPAIR AND CLEANING WORK.
2. RAKE AND REPOINT ENTIRE INTERIOR AND EXTERIOR FACE BRICK AT THE ELECTRICAL ROOM.
3. PAINT ELECTRICAL ROOM CEILING AND INTERIOR WALLS. REFER TO SPECIFICATION SECTION 842.9901.
4. REFER TO ARCHITECTURAL SHEETS FOR ADDITIONAL BUS SHELTER SCOPE.

REPAIR LEGEND

CRACKS:
- DRY
- WET

GUNITE REMOVAL

SPALL REPAIR (S1/S2)

SPALL REPAIR (S3/S4)

DELAMINATION (SEE NOTE 6 ON S-01)

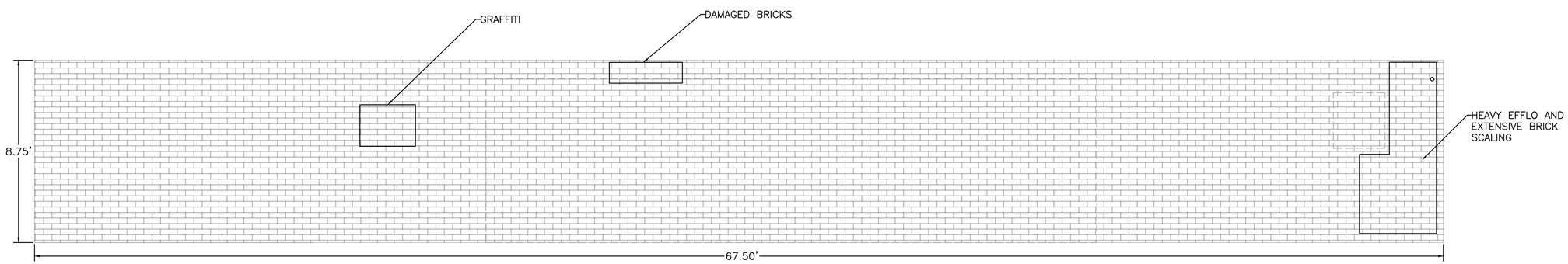

SOUTH EXTERIOR (BUS SHELTER) WALL ELEVATION – SOUTH FACE

SCALE: 3/8" = 1'

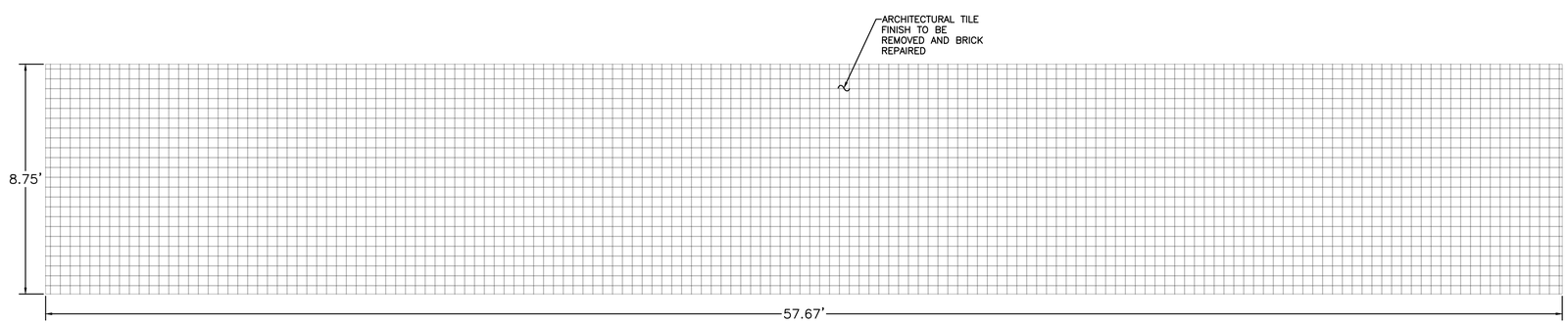

SOUTH EXTERIOR (BUS SHELTER) WALL ELEVATION – NORTH FACE

SCALE: 3/8" = 1'

REPAIR QUANTITIES		
ITEM	UNIT	QUANTITY
DRY CRACKS	LF	0.0
WET CRACKS	LF	0.0
BRICK REPAIR	SF	169.2
BRICK CLEANING	SF	1070.7
BRICK REPOINTING	LF	6424.4
TILE REMOVAL	SF	543.2

WSP USA INC.

100 SUMMER STREET, 13TH FLOOR
BOSTON, MA. 02110

166 VALLEY STREET, BUILDING 5,
PROVIDENCE, RI 02909

WWW.WSP.COM

RHODE ISLAND PUBLIC TRANSIT AUTHORITY

SCALE: NOT TO SCALE

REVISIONS			REVISIONS		
NO.	DATE	BY	NO.	DATE	BY

EAST SIDE TUNNEL REHABILITATION

PROVIDENCE RHODE ISLAND

ELECTRICAL ROOM REPAIR PLAN SHEET 2 OF 2

DESIGNED BY: HPM
CHECKED BY: SCQ
DATE: 06/30/2023
PLAN NO.: S-14
SHEET: 30 OF: 81

TDETAIL-02A.dwg

STRUCTURAL REPAIRS

STRUCTURAL DEFECTS IN THE TUNNELS WERE CLASSIFIED BASED ON THE TYPE AND SEVERITY OF THE OBSERVED DEFECT. A DESCRIPTION OF HOW REPAIRS ARE SPECIFIED IN THE EAST SIDE TUNNEL CONTRACT BID DRAWINGS AND SPECIFICATIONS FOR EACH TYPE OF DEFECT IS SUMMARIZED BELOW.

TYPE OF DEFECT	REPAIR	REPAIR DETAIL SHEET
	DRY CRACK REPAIR	
SC2, SC3, SC4	DRY CRACKS WILL BE REPAIRED BY EPOXY INJECTION IF THE CRACKS ARE CONSIDERED TO BE OF A STRUCTURAL NATURE. EPOXY INJECTION BONDS THE CONCRETE STRUCTURALLY. DEPENDING ON THE WIDTH OF THE CRACK, THE REPAIR IS PERFORMED BY INSTALLING SURFACE PORTS WITH PASTE, SEALING CRACKS BETWEEN THE PORTS WITH EPOXY PASTE, AND INJECTING EPOXY INTO THE CRACK THROUGH THE PORTS. IF THE CONCRETE SURFACE IS ROUGH, THE PORTS WILL BE DRILLED INTO THE CONCRETE. EPOXY INJECTION REPAIR APPLIES TO CRACKS THAT ARE FROM 1/8" TO > ½" WIDE (SC2, SC3, AND SC4). DRY CRACKS THAT ARE < 1/8" WIDE (SC1) AND CRACKS THAT ARE NOT CONSIDERED TO BE OF A STRUCTURAL NATURE WILL NOT BE REPAIRED. THE CONTRACTOR MAY ALSO ATTEMPT TO SEAL THE CRACK BY BRUSH OR ROLLER APPLYING OR PONDING AN ACRYLIC RESIN TO THE SURFACE IF THE CRACK WIDTH OR DEPTH DOES NOT ALLOW FOR EPOXY INJECTION TO SUCCEED.	S–19
	WET CRACK REPAIR	
C2, C3, C4	THREE TYPES OF LEAKING OR WET CRACK CONDITIONS EXIST AND REPAIR PROCEDURES HAVE BEEN DEVELOPED. TYPE I CONDITION – STOPPING FLOWING WATER OR FILLING VOIDS. THIS TYPE OF REPAIR APPLIES TO WIDE CRACKS OR JOINTS (C4 OR J4) THAT ARE EXPERIENCING A HEAVY FLOW OF WATER. HIGH EXPANSION POLYURETHANE IS SPECIFIED TO STOP HEAVY LEAKS RELATIVELY QUICKLY BY EXPANDING INTO THE CRACK OR VOID THEREBY STOPPING THE FLOW. HOLES ARE DRILLED IN AN OFFSET PATTERN INTERSECTING THE CRACK AND PACKERS ARE INSERTED AND TIGHTENED. GROUT IS THEN INJECTED INTO THE FIRST PORT AT A LOW PRESSURE UNTIL IT APPEARS AT THE NEXT PORT. THIS PROCESS IS CONTINUED UNTIL THE WATER FLOW HAS BEEN STOPPED AND GROUT HAS EXITED FROM ALL PORTS. TYPE II CONDITION – INJECTION INTO WET CRACKS AND JOINTS. THIS TYPE OF REPAIR APPLIES TO CRACKS BETWEEN 1/8 AND ½" WIDE (C2, C3) THAT ARE WET BUT ARE NOT DEMONSTRATING A HEAVY FLOW OF WATER. FLEXIBLE POLYURETHANE CHEMICAL GROUT OR METHACRYLIC ACRYLATE IS USED TO SEAL THE LEAK. THE PREPARATION AND EXECUTION OF THE REPAIR IS THE SAME AS FOR TYPE I EXCEPT THAT WATER IS REQUIRED TO BE INJECTED THROUGH THE PACKER IF POLYURETHANE IS BEING USED. TYPE III CONDITION – CREATING AN EXTERNAL CURTAIN WALL. THIS TYPE OF REPAIR APPLIES TO AREAS WHERE MANY CRACKS EXIST IN A LARGE AREA CAUSING AN UNDEFINABLE AREA TO REPAIR. THE REPAIR PROCEDURE INCLUDES DRILLING HOLES INTO THE LEAKING AREA THAT EXTEND TO AND THROUGH THE EXTERIOR SIDE OF THE WALL OR CEILING AND INSTALLING PACKERS USING THE SAME PROCEDURES DESCRIBED ABOVE FOR WET CRACK TYPES I AND II. METHACRYLIC ACRYLATE GROUT IS THEN INJECTED TO AND THROUGH THE EXTERIOR FACE CREATING A CURTAIN WALL.	S–19

TYPE OF DEFECT	REPAIR	REPAIR DETAIL SHEET
	REINFORCING BAR REPAIR	
R1, R2, R3, R4	REINFORCING BAR REPAIRS WILL DEPEND ON THE DEGREE OF CORROSION OR DAMAGE ENCOUNTERED AND WILL BE PERFORMED IN CONJUNCTION WITH A SPALL REPAIR. BENT OR BROKEN REINFORCING BARS (R3, R4) OR THOSE THAT HAVE LOST MORE THAN 25% OF THEIR SECTION DUE TO CORROSION WILL BE REQUIRED TO BE REMOVED AND REPLACED IN KIND BY EITHER LAP SPLICING OR MECHANICAL COUPLERS. CORRODED BARS WITH LESS THAN 25% OF SECTION LOSS WILL BE CLEANED AND GALVANIC ANODES WILL BE TIED TO THE REPAIRED BARS. IN AREAS THAT ARE TOO SHALLOW TO ACCEPT ANODES, THE REINFORCING BARS WILL BE COVERED WITH A ZINC RICH COATING.	S–16 S–17
	DELAMINATION AND SPALL REPAIR	
S1, S2, S3, S4, D	DELAMINATIONS ARE DEFINED AS AREAS OF CONCRETE STRUCTURES WHERE THE TOP 1/16" TO 1/8" OF THE CONCRETE SURFACE HAS SEPARATED FROM THE REMAINDER OF THE STRUCTURE AND SOUNDS HOLLOW WHEN TAPPED WITH A MASON'S HAMMER. THE REPAIR IS PREPARED BY REMOVING THE HOLLOW SOUNDING AND ALL LOOSE MATERIAL BY HYDRO–DEMOLITION OR BY PNEUMATIC HAMMER (15 LBS MAX. WEIGHT FOR FINAL DETAILING AROUND REINFORCING). SPALLS ARE DEFINED AS AREAS OF A CONCRETE STRUCTURE WHERE CONCRETE HAS COMPLETELY SEPARATED FROM THE STRUCTURE AND HAS CREATED A HOLE IN THE SURFACE. THE REPAIR IS PREPARED BY REMOVING ALL LOOSE AND UNSOUND CONCRETE FROM THE HOLE AS DESCRIBED ABOVE FOR DELAMINATIONS. ANY EXPOSED REINFORCING BARS WILL NEED TO BE REPAIRED AS DESCRIBED ABOVE. FOLLOWING REMOVAL OF LOOSE MATERIAL AND CLEANING OF REINFORCING BARS, WELDED WIRE MESH IS INSTALLED AND SECURED USING J HOOKS. THE AREA IS THEN REPAIRED USING EITHER SHOTCRETE OR MORTAR USING EITHER FORM AND PUMP OR HAND TROWELING METHODS.	S–16 S–17
	FRAMING STEEL REPAIR	
F1, F2, F3*, F4*	FRAMING STEEL REPAIRS DETAILED ON THE DRAWINGS APPLY TO REPAIR OF FRAMING STEEL EXHIBITING "SURFACE RUST" AND "LOSS OF SECTION". SURFACE RUST IS REMOVED BY BLAST CLEANING THE STEEL AND LOSS OF SECTION IS REPAIRED BY WELDING PLATES TO THE EXISTING STEEL COLUMNS, BEAMS OR BRACES. ALL SURFACES ARE THEN COATED WITH A ZINC RICH COATING. ALL OTHER FRAMING STEEL REPAIRS WILL REQUIRE A SEPARATE DESIGN SUBMITTAL. REPAIRS THAT CANNOT BE ACCOMPLISHED USING METHODS SPECIFIED ON THE DRAWINGS WILL BE REPORTED TO THE ENGINEER BY THE CONTRACTOR. THE ENGINEER WILL BE RESPONSIBLE FOR DETAILING THE REQUIRED REPAIR (F3 AND F4)*. ALL FRAMING STEEL REPAIRS SHALL BE PERFORMED WITH THE APPLICABLE REQUIREMENTS IN SPEC SECTION 824 – STRUCTURAL STEEL CONSTRUCTION. *NOTE THAT REPAIR DETAILS FOR F3 AND F4 WILL REQUIRE A DESIGN.	S–18

WSP USA INC.
100 SUMMER STREET, 13TH FLOOR
BOSTON, MA. 02110
166 VALLEY STREET, BUILDING 5,
PROVIDENCE, RI 02909
WWW.WSP.COM

RHODE ISLAND PUBLIC TRANSIT AUTHORITY

RHODE ISLAND
PUBLIC TRANSIT AUTHORITY

SCALE: NOT TO SCALE

REVISIONS			REVISIONS		
NO.	DATE	BY	NO.	DATE	BY

EAST SIDE TUNNEL REHABILITATION

PROVIDENCE RHODE ISLAND

STRUCTURAL TUNNEL REPAIR DETAILS 1

DESIGNED BY: HPM
CHECKED BY: SCQ
DATE: 06/30/2023
PLAN NO.: S–15
SHEET: 31 OF: 81

TREPAIRDETL001.dwg

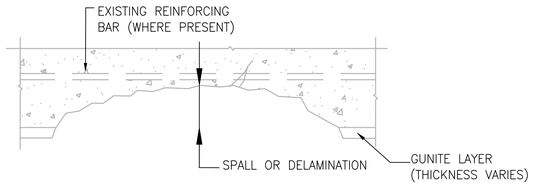

EXISTING CONDITION: SHALLOW SPALL NOT TO REINFORCING BAR IN CEILING OR WALL (DEFECT TYPE S1, D)
N.T.S.

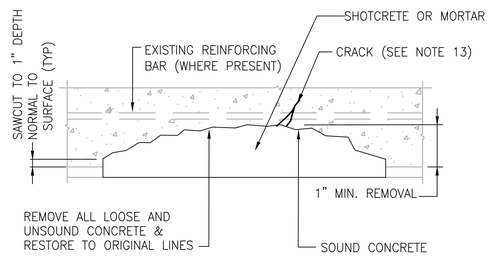

TYPICAL SHALLOW SPALL REPAIR DETAIL (DEFECT TYPE S1, D)

EXISTING CONDITION: SPALL BEHIND REINFORCING BAR IN CEILING OR WALL (DEFECT TYPE S3)
N.T.S.

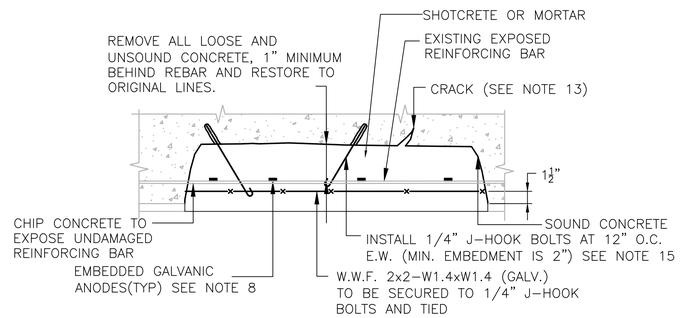

TYPICAL REPAIR DETAIL
SPALL BEHIND REINFORCING BAR (DEFECT TYPE S3)
N.T.S.

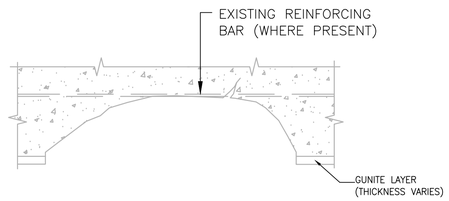

EXISTING CONDITION: SPALL TO REINFORCING BAR IN CEILING OR WALL (DEFECT TYPE S2)
N.T.S.

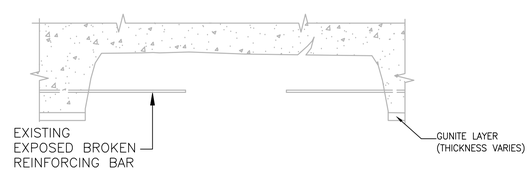

EXISTING CONDITION SPALL BEHIND BROKEN OR 25% DETERIORATED REINFORCING BAR (25% OR GREATER SECTION LOSS) IN CEILING OR WALL (DEFECT TYPE S4)
N.T.S.

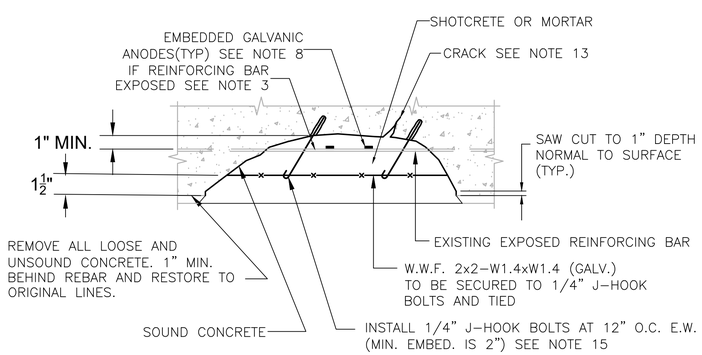

TYPICAL REPAIR DETAIL
SPALL TO REINFORCING BAR (DEFECT TYPE S2)
N.T.S.

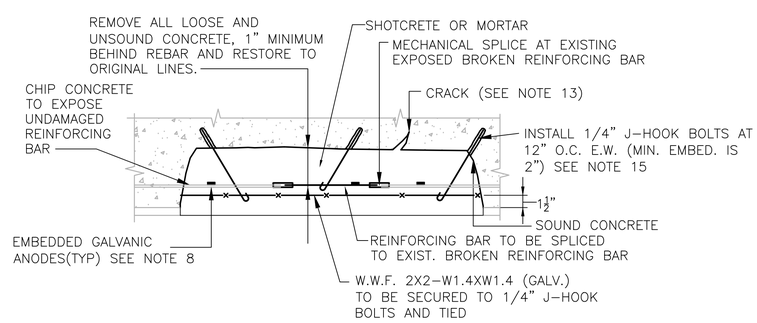

TYPICAL REPAIR DETAIL
SPALL BEHIND BROKEN OR DETERIORATED REINFORCING BAR (25% OR GREATER SECTION LOSS) (DEFECT TYPE S4)
N.T.S.

NOTES:

1. FOR SPALL REPAIR (APPLIES TO S1 TO S4 DEFECT TYPES). CONTRACTOR SHALL SOUND AREAS TO DETERMINE LIMITS OF REPAIR. AREAS DESIGNATED AS DELAMINATIONS SHALL BE REMOVED UNTIL THERE IS EVIDENCE OF SOUND CONCRETE AND SHALL THEN BE REPAIRED IN ACCORDANCE WITH TYPICAL REPAIR DETAILS DEFECT TYPES S1, S2, S3, OR S4.
2. THE CONTRACTOR SHALL SAW CUT AROUND THE AREA TO PREPARE TO A DEPTH OF 1" NORMAL TO SURFACE. REPAIR AREA WILL BE SQUARE OR RECTANGULAR AND RE-ENTRANT CORNERS ARE NOT PERMITTED. REMOVE ALL UNSOUND CONCRETE AND EXPOSE ALL CORRODED REINFORCING BARS.
3. IF THE REINFORCING BAR IS EXPOSED MORE THAN APPROXIMATELY HALF OF THE DIAMETER OF THE BAR AND MORE THAN 3" IN LENGTH, THE AREA AROUND THE EXPOSED REINFORCING BAR WILL BE REMOVED TO APPROXIMATELY 1" MINIMUM BEHIND THE REINFORCING BAR.
4. ALL GUNITE ABOVE THE SPRINGLINE AND ALL DELAMINATED GUNITE BELOW THE SPRINGLINE SHALL BE REMOVED BY HYDRODEMOLITION OR BY HAND USING A MAXIMUM 15LB PNEUMATIC HAMMER. DELAMINATED, SPALLED, LOOSE AND UNSOUND CONCRETE SHALL BE REMOVED BY HYDRO-DEMOLITION OR BY HAND USING A MAXIMUM 15LB PNEUMATIC HAMMER.
5. REMOVAL OF CONCRETE SHALL PROVIDE A ROUGHENED SURFACE TO A MINIMUM SUBSTRATE PROFILE TO $\frac{1}{4}$" AND SHALL REMOVE ANY CONCRETE TO 1" FROM ANY EXPOSED REINFORCING BAR.
6. WATERBLAST CONCRETE SURFACE AND EXPOSED REINFORCING BAR TO REMOVE ALL CONTAMINANTS AND RUST.
7. FOLLOWING CLEANING OF THE SURFACE, THE ENGINEER SHALL CONFIRM THE CONCRETE SURFACE PROFILE.
8. INSTALL EMBEDDED GALVANIC ANODES INTO THE AREA TO BE REPAIRED BY TYING THE ANODES TO THE REPAIRED REINFORCING BAR. REQUIREMENT FOR EMBEDDED GALVANIC ANODES ARE PROVIDED IN THE SPECIFICATION SECTION 817.
9. APPLY BONDING COMPOUND IF REQUIRED BY MORTAR MANUFACTURER'S WRITTEN REQUIREMENTS.
10. REPAIR ANY DETERIORATED REINFORCING BAR THAT IS BROKEN OR HAS A 25% OR GREATER LOSS OF ORIGINAL SECTION BY MECHANICALLY SPLICING NEW REINFORCING BAR. OR LAP SPLICE WITH NEW REINFORCING BARS TO MATCH INTACT DIAMETER OF DETERIORATED REINFORCING BAR. SEE LAP SPLICE SCHEDULE.
11. IN AREAS WHERE THE REPAIR IS DEEPER THAN 2", INSTALL NEW GALVANIZED WELDED WIRE FABRIC USING J HOOK BOLTS AT 12" ON CENTER OR AS DETAILED IN SPECIFICATION SECTION 817. J-HOOK BOLT INSTALLATION SHALL NOT DAMAGE EXISTING REINFORCING STEEL.
12. RESTORE SURFACE TO ORIGINAL LINES BY INSTALLING SHOTCRETE AND FINISH IN ACCORDANCE OR BY INSTALLING 6000 PSI MORTAR BY FORM AND PUMP OR HAND TROWEL IN ACCORDANCE WITH SPECIFICATION SECTION 817. CONSTRUCT CONTRACTION JOINTS AT 10' SPACING.
13. REFER TO SHEET S-15 THROUGH S-19 FOR CRACK REPAIR PROTOCOL AND DETAIL.
14. ANY REINFORCEMENT DAMAGED BY CONTRACTOR'S OPERATION SHALL BE REPAIRED AT NO ADDITIONAL EXPENSE TO AUTHORITY.
15. TO INSTALL J-HOOK DRILL HOLE AND INSTALL ANCHOR HEAD FIRST AND SET ANCHOR WITH SETTING TOOL USING SEVERAL FIRM BLOWS.
16. CONSTRUCTION AND CONTROL JOINTS IN CONCRETE REPAIRS SHALL BE ALIGNED WITH THE EXISTING JOINTS IN THE CONCRETE FILL SLAB. JOINTS SHALL BE $\frac{3}{8}$" WIDE AND FULL DEPTH OF THE CONCRETE REPAIR. BACKER ROD AND SEALANT DEPTH SHALL BE PER MANUFACTURER'S RECOMMENDATION.

LAP SPLICE SCHEDULE	
BAR SIZE	L (MIN.)
#4	12"
#5	15"
#6	18"
#7	23"

COUPLER SCHEDULE	
BAR SIZE	L (MIN.)
#4	5.5"
#5	6.3"
#6	8.0"
#7	9.8"

L (MIN.) = MINIMUM COUPLER LENGTH FOR REMAINING EXISTING REINFORCING FOR SPLICING REQUIREMENTS BASED ON "BAR LOCK SYSTEM" BY DAYTON SUPERIOR. EQUIVALENT COUPLERS MAY BE USED. SUBMIT FOR APPROVAL.

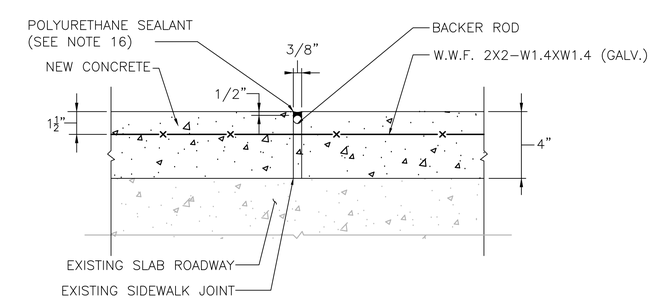

TYPICAL SIDEWALK AND JOINT REPAIR DETAIL
N.T.S.

WSP USA INC.
100 SUMMER STREET, 13TH FLOOR
BOSTON, MA. 02110
166 VALLEY STREET, BUILDING 5,
PROVIDENCE, RI 02909
WWW.WSP.COM

RHODE ISLAND PUBLIC TRANSIT AUTHORITY

RHODE ISLAND
PUBLIC TRANSIT AUTHORITY

SCALE: NOT TO SCALE

REVISIONS			REVISIONS		
NO.	DATE	BY	NO.	DATE	BY

EAST SIDE TUNNEL REHABILITATION
PROVIDENCE RHODE ISLAND
STRUCTURAL TUNNEL REPAIR DETAILS 2

DESIGNED BY: HPM
CHECKED BY: SCQ
DATE: 06/30/2023
PLAN NO.: S-16
SHEET: 32 OF: 81

TREPAIRDETL001.dwg

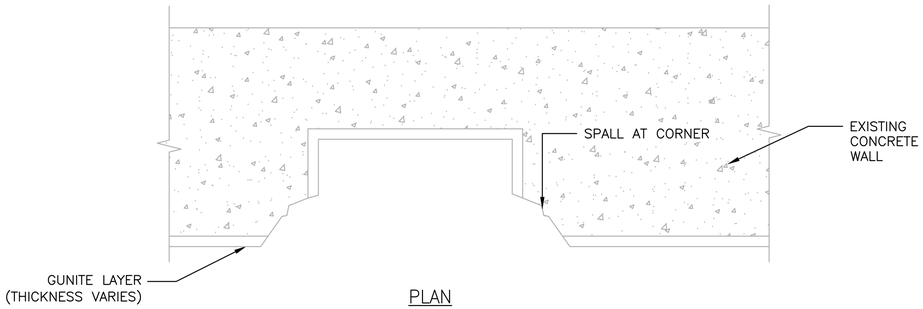

PLAN
EXISTING CONDITION: TYPICAL SPALL AT EXTERIOR CORNER (NICHE)
N.T.S.

NOTES: FOR CORNER SPALL REPAIR: (APPLIES TO S1 TO S4 DEFECTS)

1. CONTRACTOR SHALL SOUND AREAS REQUIRING REPAIR TO DETERMINE LIMITS OF CONCRETE REMOVAL. AREAS DESIGNATED AS DELAMINATIONS SHALL BE REMOVED UNTIL THERE IS EVIDENCE OF SOUND CONCRETE AND SHALL THEN BE REPAIRED IN ACCORDANCE WITH REPAIR DETAILS.
2. CONTRACTOR SHALL SAW CUT AROUND THE AREA TO PREPARE TO A DEPTH OF 1" NORMAL TO SURFACE. REPAIR AREA WILL BE SQUARE OR RECTANGULAR AND RE-ENTRANT CORNERS ARE NOT PERMITTED. DELAMINATED, SPALLED, LOOSE AND UNSOUND CONCRETE AT CORNER SHALL BE REMOVED BY HYDRO-DEMOLITION OR BY HAND USING A 15 LB. MAX PNEUMATIC HAMMER TO 1" MIN. BEHIND REINFORCING BAR.
3. REMOVAL SHALL PROVIDE A ROUGHENED SURFACE TO A MINIMUM OF ¼" SUBSTRATE PROFILE AND SHALL REMOVE ANY CONCRETE FROM ANY EXPOSED REINFORCING BAR.
4. WATERBLAST CONCRETE SURFACE AND EXPOSED REINFORCING BAR TO REMOVE ALL CONTAMINANTS AND RUST.
5. FOLLOWING CLEANING OF THE SURFACE, THE ENGINEER SHALL CONFIRM THE CONCRETE SURFACE PROFILE.
6. APPLY BONDING COMPOUND IF REQUIRED BY MORTAR MANUFACTURER'S WRITTEN REQUIREMENT.
7. RESTORE THE CORNER TO ORIGINAL LINES BY INSTALLING SHOTCRETE AND FINISH OR BY APPLYING A BONDING COMPOUND FOLLOWED BY FORMING PRIOR TO PLACEMENT OF AN APPROVED 6000 PSI MORTAR IN ACCORDANCE WITH SPECIFICATION SECTION 817.
8. CONTRACTOR TO USE ONLY THE FORM AND PUMP, SHOTCRETE REPAIR OR HAND TROWEL METHODS TO PROVIDE THE FINISHED REPAIR SURFACE.

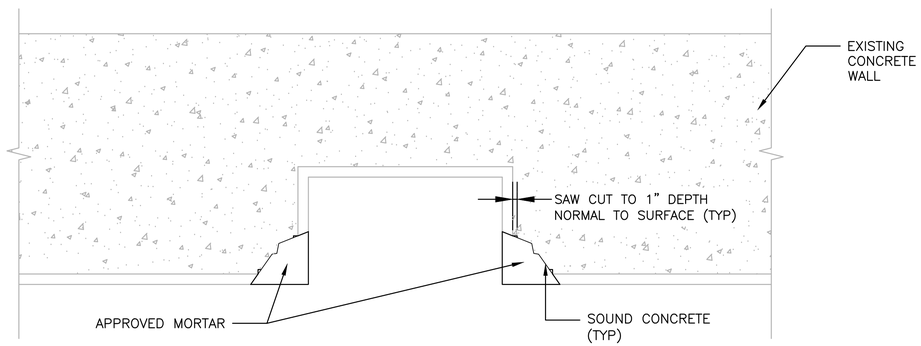

PLAN
REPAIR DETAIL FOR SPALL AT EXTERIOR CORNER (NICHE)
N.T.S.

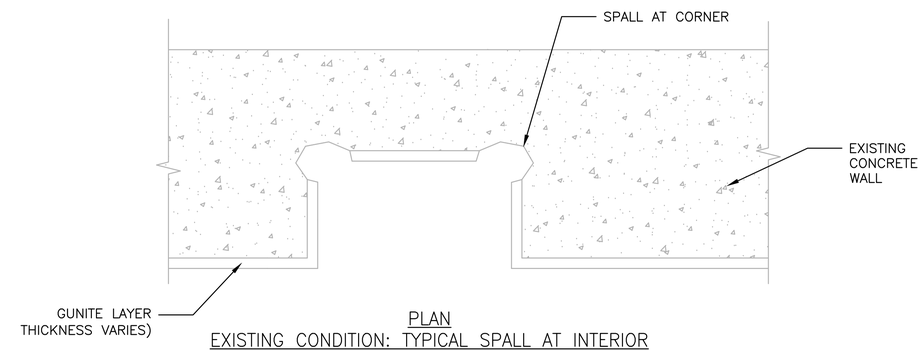

PLAN
EXISTING CONDITION: TYPICAL SPALL AT INTERIOR CORNER (NICHE)
N.T.S.

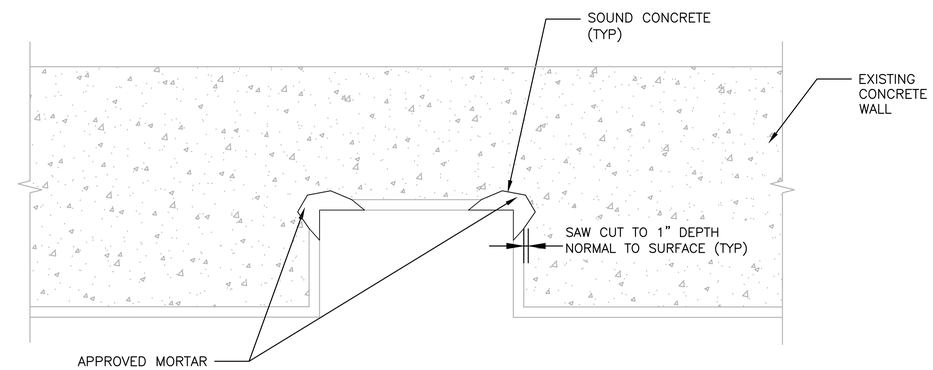

PLAN
REPAIR DETAIL FOR SPALL AT INTERIOR CORNER (NICHE)
N.T.S.

WSP USA INC.
100 SUMMER STREET, 13TH FLOOR
BOSTON, MA. 02110
166 VALLEY STREET, BUILDING 5,
PROVIDENCE, RI 02909
WWW.WSP.COM

RHODE ISLAND PUBLIC TRANSIT AUTHORITY

SCALE: NOT TO SCALE

REVISIONS			REVISIONS		
NO.	DATE	BY	NO.	DATE	BY

EAST SIDE TUNNEL REHABILITATION
PROVIDENCE RHODE ISLAND
STRUCTURAL TUNNEL REPAIR DETAILS 3

DESIGNED BY: HPM
CHECKED BY: SCQ
DATE: 06/30/2023
PLAN NO.: S-17
SHEET: 33 OF: 81

TREPAIRDETL001.dwg

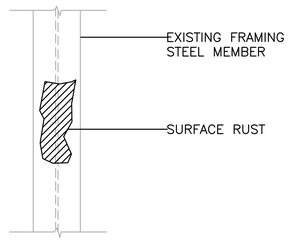

EXISTING CONDITION
FRAMING STEEL WITH SURFACE RUST
(DEFECT TYPE F1)
N.T.S.

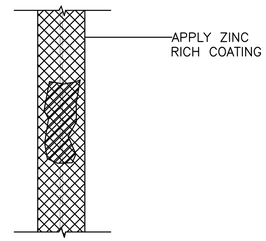

TYPICAL FRAMING STEEL
WITH RUST–REPAIR DETAIL
N.T.S.

- REMOVE SURFACE RUST BY BLAST CLEANING THE STEEL AND COATING WITH A ZINC RICH COATING

NOTES FOR TYPICAL FRAMING STEEL REPAIR DETAILS (APPLIES TO F1 TO F2 DEFECTS).

1. DETAILS FOR F1 AND F2 DEFECTS ARE SHOWN.
2. STEEL FRAMING REPAIRS F1 TO F2 ARE DEFINED AS FOLLOWS:
   F1 – SURFACE RUST
   F2 – LOSS OF SECTION
3. ANY FRAMING STEEL THAT IS CURRENTLY CONCRETE ENCASED WHERE CONCRETE MUST BE REMOVED TO PERFORM FRAMING STEEL REPAIR WILL BE REPAIRED AS FOLLOWS: REMOVE ALL NECESSARY CONCRETE (INCLUDING DELAMINATED, LOOSE AND UNSOUND CONCRETE) BY HYDRO–DEMOLITION OR BY PNEUMATIC HAMMER (30 LBS MAX. WEIGHT FOR BULK REMOVAL AND 15 LBS MAX. WEIGHT FOR FINAL DETAILING AROUND REINFORCING OR STRUCTURAL STEEL). CLEAN THE EXPOSED STEEL AND INSTALL ANODES BY TACKING TO THE CLEANED STEEL SURFACE OR COAT THE CLEANED STEEL SURFACE WITH A ZINC RICH COATING. WELDED WIRE MESH IS THEN SECURED TO THE STEEL AND THE ENCASEMENT IS REINSTALLED BY SHOTCRETING.

BEAM SECTION

COLUMN SECTION

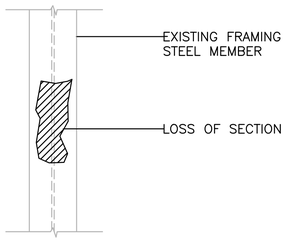

EXISTING CONDITION
FRAMING STEEL WITH SECTION LOSS >30%
(DEFECT TYPE F2)
N.T.S.

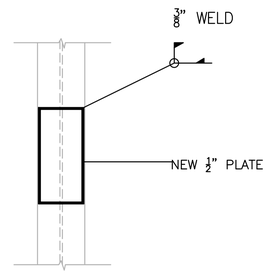

TYPICAL FRAMING STEEL
WITH SECTION LOSS>30%
REPAIR DETAIL ELEVATION
N.T.S.

- REMOVE SURFACE RUST BY BLAST CLEANING THE STEEL
- WELD 1/2" PLATE TO CLEANED FRAMING MEMBER
- COAT BOTH MEMBER AND PLATE WITH ZINC RICH COATING

WSP USA INC.
100 SUMMER STREET, 13TH FLOOR
BOSTON, MA. 02110
166 VALLEY STREET, BUILDING 5,
PROVIDENCE, RI 02909
WWW.WSP.COM

RHODE ISLAND PUBLIC TRANSIT AUTHORITY

RHODE ISLAND
PUBLIC TRANSIT AUTHORITY

SCALE: NOT TO SCALE

REVISIONS			REVISIONS		
NO.	DATE	BY	NO.	DATE	BY

EAST SIDE TUNNEL REHABILITATION

PROVIDENCE RHODE ISLAND

STRUCTURAL TUNNEL REPAIR DETAILS 4

DESIGNED BY: HPM
CHECKED BY: SCQ
DATE: 06/30/2023
PLAN NO.: S–18
SHEET: 34 OF: 81

TREPAIRDETL001.dwg

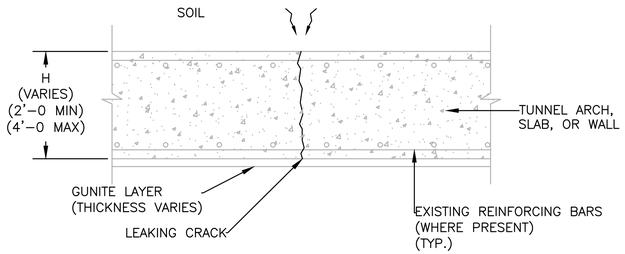

SECTION
EXISTING SINGLE LEAKING CRACK
(DEFECT TYPE C2 TO C4)
N.T.S.

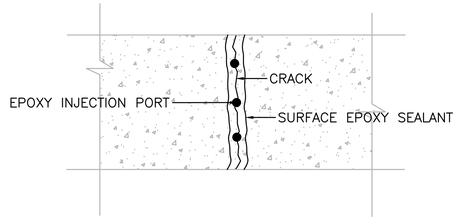

ELEVATION
REPAIR DETAIL: DRY CRACK >1/8" (DEFECT
TYPE SC2 TO SC4)
(REPAIR MATERIAL TYPE NO.1, 2 & 3)
N.T.S.

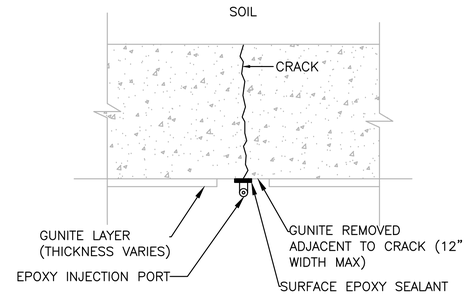

REPAIR DETAIL
STRUCTURAL REPAIR OF CRACK
(DEFECT TYPE SC2 TO SC4)
(REPAIR MATERIAL TYPE NO.1, 2 & 3)
N.T.S.

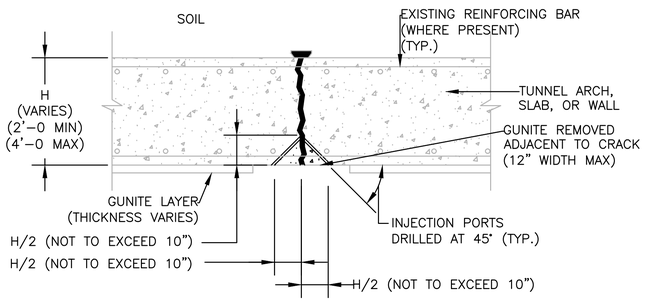

REPAIR DETAIL
SINGLE LEAKING CRACK (DEFECT TYPE C2 TO C4)
GROUT INJECTED INTO CRACK (REPAIR MATERIAL TYPE NO.4)
N.T.S.

NOTES FOR LEAKING CRACKS OR JOINT REPAIR DETAILS DEFECT TYPE C2 TO C4 AND J2 TO J4:

1. DRILL OFFSET INJECTION HOLES AT A DISTANCE FROM THE CRACK OR JOINT HALF THE DEPTH OF THE CONCRETE.
2. DRILL AT A 45 DEGREE ANGLE (OR OTHER ANGLE IF REQUIRED) TO INTERSECT THE CRACK OR JOINT AT JUST OVER HALF THE DEPTH OF THE CONCRETE.
3. FLUSH HOLES WITH WATER PRIOR TO INSTALLING PACKERS.
4. ALTERNATE THE INJECTION HOLES ON EITHER SIDE OF THE CRACK OR JOINT.
5. SPACE HOLES SO THE GROUT CAN COMPLETELY FILL THE CRACK OR JOINT. INJECTION HOLE SPACING IS NORMALLY 6 INCHES TO 24 INCHES APART DEPENDING UPON THE WIDTH OF THE DEFECT. USE TEST HOLES TO PUMP WATER INTO THE CRACK OR JOINT TO DETERMINE SPACING FOR INJECTION HOLES.
6. INSTALL THE INJECTION PACKERS IN HOLES AND TIGHTEN.
7. ALL LOCATIONS TO BE GROUTED SHALL BE THOROUGHLY FLUSHED WITH CLEAN WATER PUMPED THROUGH THE PACKERS TO REMOVE DIRT, DUST, AND OTHER CONTAMINANTS.
8. INJECT RESIN THROUGH THE INSTALLED PACKERS.
9. CONTRACTOR TO REVIEW AS–BUILT DRAWINGS TO DETERMINE H. AS–BUILT DRAWINGS MAY BE AVAILABLE ON A LIMITED BASIS FOR REVIEW AT MBTA RECORDS DEPARTMENT OR PROVIDED TO THE CONTRACTOR AS REFERENCE DRAWINGS.
10. CRACKS IN FACE BRICK AND MORTAR SHALL BE REPAIRED BY REPLACING DEFECTIVE BRICKS AND REPOINTING MORTAR. CRACKS IN BRICK AND MORTAR IN INNER LAYERS SHALL BE REPAIRED AS IF THEY ARE WET CRACKS USING REPAIR MATERIAL TYPE 4.

CRACK/JOINT REPAIR PROTOCOL

LOCATION	DRY CRACKS (SC2 TO SC4)	LEAKING OR SATURATED CRACKS (C2 TO C4)
	GREATER THAN OR EQUAL TO 1/8"	GREATER THAN OR EQUAL TO 1/8"
CEILING OVERHEAD (HORIZONTAL)	REPAIR MATERIAL TYPE 1+2	REPAIR MATERIAL TYPE 4
HORIZONTAL SURFACE	REPAIR MATERIAL TYPE 1+3	REPAIR MATERIAL TYPE 4
WALLS	REPAIR MATERIAL TYPE 1+2	REPAIR MATERIAL TYPE 4

REPAIR MATERIAL TYPE NO.	APPLICATION	MATERIAL	SPECIFICATION SECTION
1	SURFACE INJECT	EPOXY	RIDOT BLUE BOOK SECTION 836
2	BRUSH OR ROLLER APPLY	ACRYLIC	RIDOT BLUE BOOK SECTION 836
3	DIRECT APPLICATION	ACRYLIC	RIDOT BLUE BOOK SECTION 836
4	DRILL AND INJECT	HYDROPHOBIC POLYURETHANE OR METHACRYLIC ACRYLATE	CODE ITEM 836.9901 TO 836.9903

WSP USA INC.
100 SUMMER STREET, 13TH FLOOR
BOSTON, MA. 02110
166 VALLEY STREET, BUILDING 5,
PROVIDENCE, RI 02909
WWW.WSP.COM

RHODE ISLAND PUBLIC TRANSIT AUTHORITY

RHODE ISLAND
PUBLIC TRANSIT AUTHORITY

SCALE: NOT TO SCALE

REVISIONS			REVISIONS		
NO.	DATE	BY	NO.	DATE	BY

EAST SIDE TUNNEL REHABILITATION
PROVIDENCE RHODE ISLAND
STRUCTURAL TUNNEL REPAIR DETAILS 5

DESIGNED BY: HPM
CHECKED BY: SCQ
DATE: 06/30/2023
PLAN NO.: S–19
SHEET: 35 OF: 81

TREPAIRDETL001.dwg

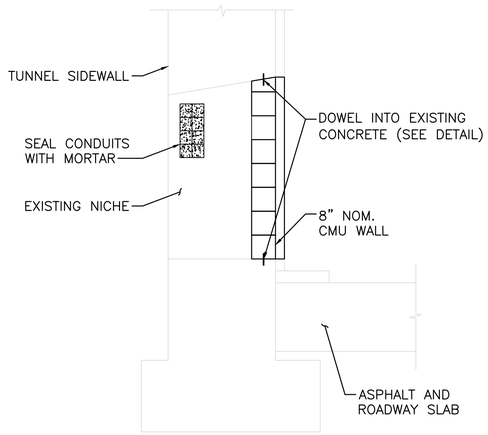

SECTION
SCALE: N.T.S.

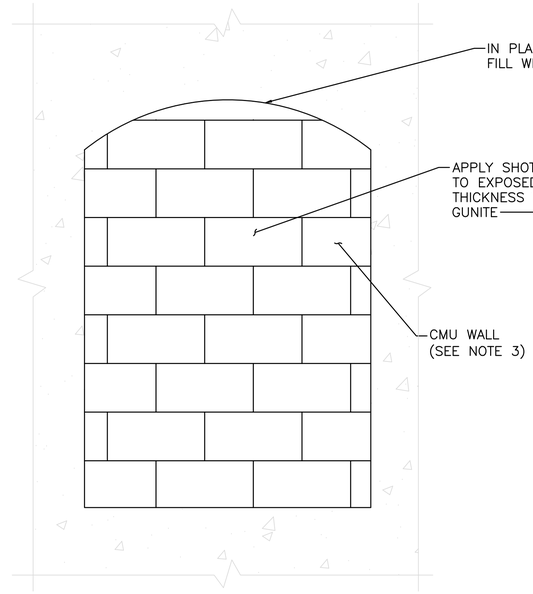

ELEVATION – TYPICAL NICHE
SCALE: N.T.S.

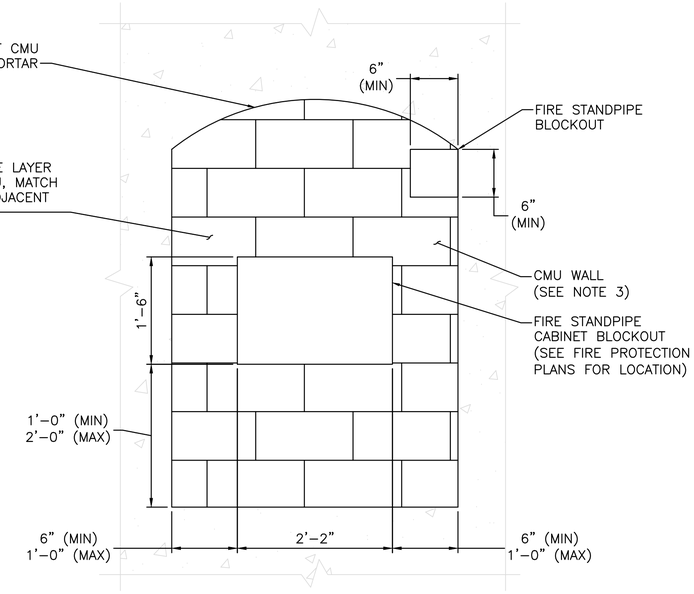

ELEVATION – NICHE WITH STANDPIPE VALVE
SCALE: N.T.S.

SHEET NOTES:

1. SEE EXISTING CONDITION DRAWINGS FOR NICHE LOCATIONS.
2. SEE FIRE PROTECTION PLANS FOR STANDPIPE VALVE LOCATIONS.
3. CMU BLOCK CONFIGURATIONS SHOWN FOR TYPICAL NICHE AND NICHE WITH STANDPIPE VALVE ARE FOR REFERENCE ONLY. THE CONTRACTOR SHALL DETERMINE THE MOST EFFICIENT CMU BLOCK CONFIGURATION AND CONSTRUCT ACCORDINGLY.

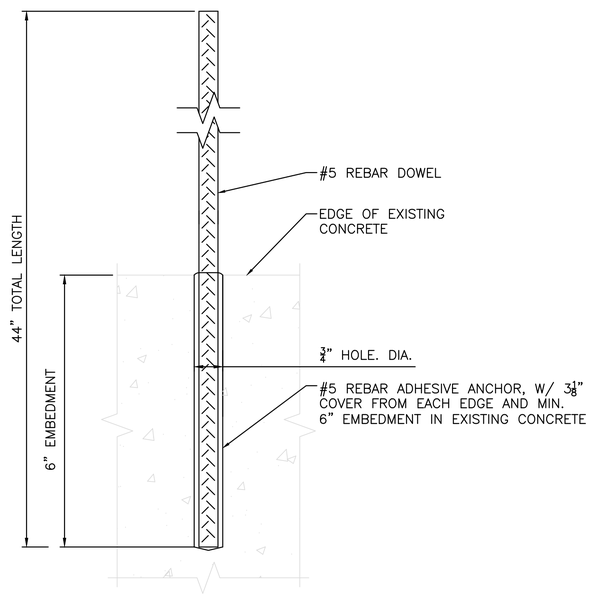

CMU WALL DOWEL BAR DETAIL
SCALE: N.T.S.

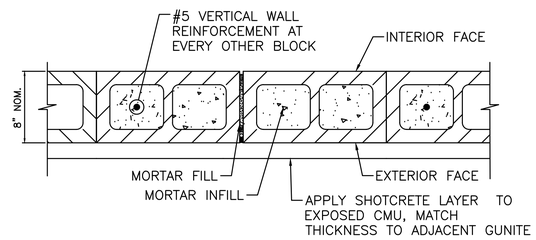

CONTROL JOINT DETAIL
SCALE: N.T.S.

WSP USA INC.
100 SUMMER STREET, 13TH FLOOR
BOSTON, MA. 02110
166 VALLEY STREET, BUILDING 5,
PROVIDENCE, RI 02909
WWW.WSP.COM

RHODE ISLAND PUBLIC TRANSIT AUTHORITY

RHODE ISLAND
PUBLIC TRANSIT AUTHORITY

SCALE: NOT TO SCALE

REVISIONS			REVISIONS		
NO.	DATE	BY	NO.	DATE	BY

EAST SIDE TUNNEL REHABILITATION
PROVIDENCE RHODE ISLAND
STRUCTURAL TUNNEL
NICHE CLOSURE DETAILS

DESIGNED BY: HPM
CHECKED BY: SCQ
DATE: 06/30/2023
PLAN NO.: S–20
SHEET: 36 OF: 81

TDETAIL–05.dwg

SHEET NOTES:

1. SEE LIGHTING PLANS FOR LUMINAIRE DETAILS.
2. REFER TO SPECIFICATION SECTION 824.0710 FOR CONCRETE ANCHOR REQUIREMENTS.

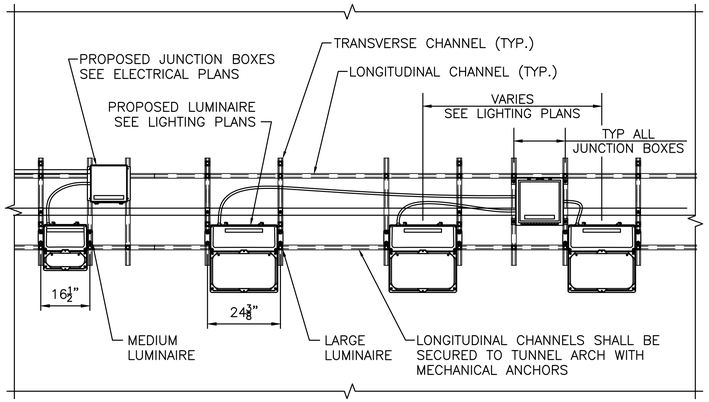

REFLECTED CEILING PLAN
N.T.S.

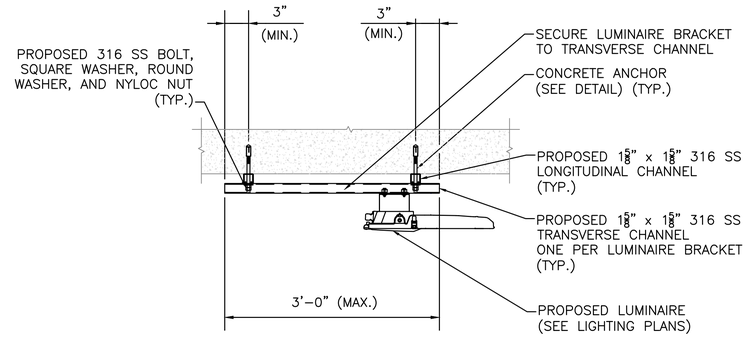

LIGHTING SUPPORT – DETAIL
N.T.S.

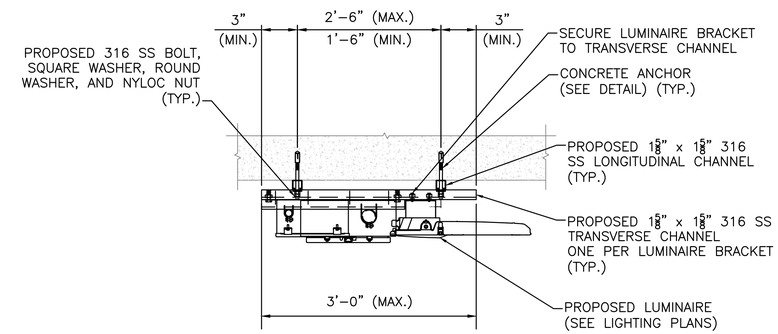

LIGHTING SUPPORT – WITH JUNCTION BOX – DETAIL
N.T.S.

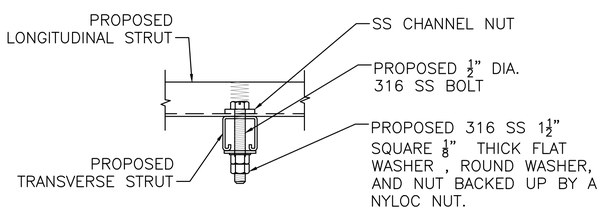

TYPICAL CHANNEL CONNECTION DETAIL
N.T.S.

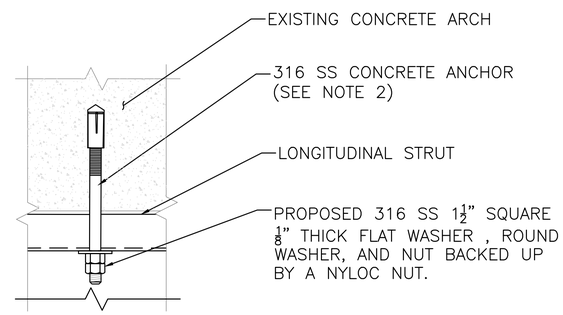

TYPICAL CONCRETE ANCHOR DETAIL
N.T.S.

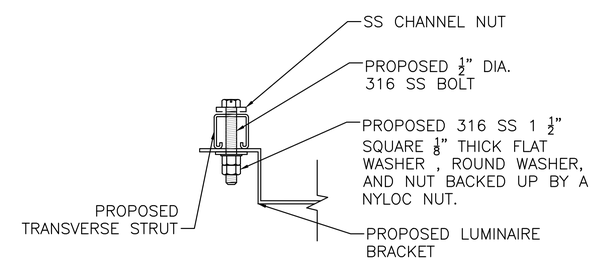

TYPICAL LUMINAIRE CONNECTION DETAIL
N.T.S.

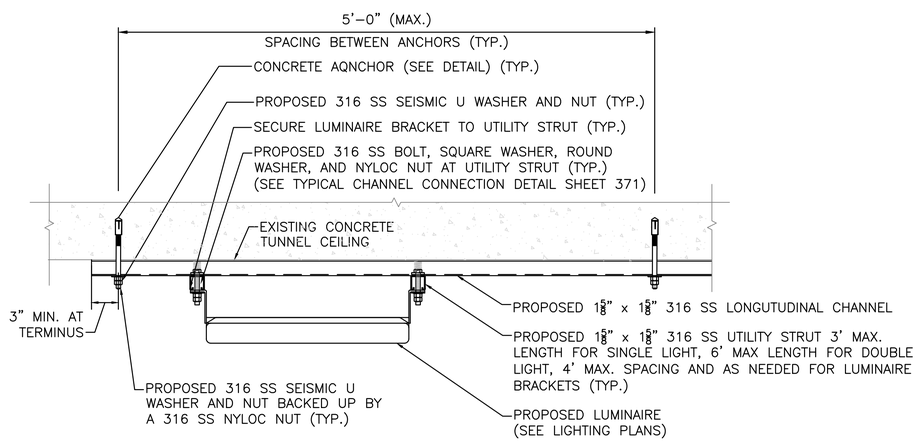

LIGHTING SUPPORT – ELEVATION
N.T.S.

WSP USA INC.
100 SUMMER STREET, 13TH FLOOR
BOSTON, MA. 02110
166 VALLEY STREET, BUILDING 5,
PROVIDENCE, RI 02909
WWW.WSP.COM

RHODE ISLAND PUBLIC TRANSIT AUTHORITY

RHODE ISLAND
PUBLIC TRANSIT AUTHORITY

SCALE: NOT TO SCALE

REVISIONS			REVISIONS		
NO.	DATE	BY	NO.	DATE	BY

EAST SIDE TUNNEL REHABILITATION
PROVIDENCE RHODE ISLAND
STRUCTURAL TUNNEL ATTACHMENT DETAILS 1

DESIGNED BY: HPM
CHECKED BY: SCQ
DATE: 06/30/2023
PLAN NO.: S-21
SHEET: 37 OF: 81

TDETAIL-04.dwg

SHEET NOTES:

1. DEFLECTOR PLATE TO BE PLACED IN FRONT OF DOWNSPOUTS IN THE DIRECTION OF TRAFFIC ON BOTH WALLS, SEE DRAINAGE AND CIVIL PLANS FOR DOWNSPOUT LOCATIONS AND ADDITIONAL DETAILS.
2. SEE SPECIFICATION SECTION 830.9901 FOR STEEL REQUIREMENTS

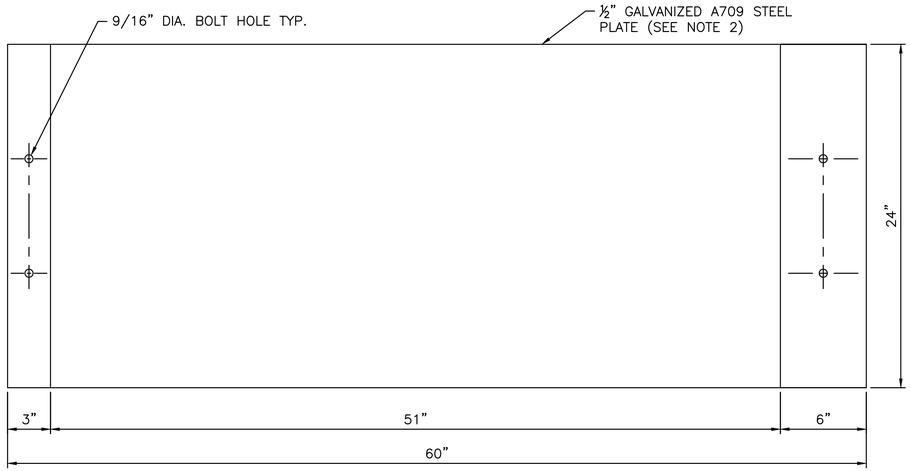

DEFLECTOR PLATE ELEVATION VIEW

SCALE : $\frac{1}{8}$" = 1'–0"

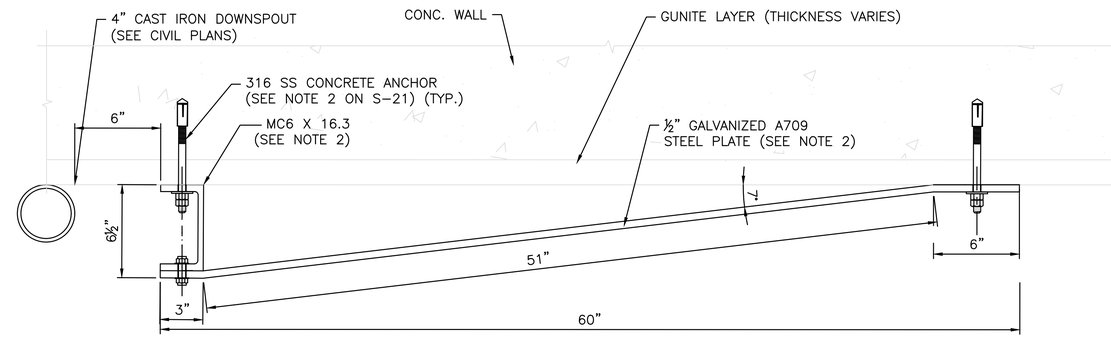

DEFLECTOR ASSEMBLY TOP VIEW

SCALE : $\frac{1}{8}$" = 1'–0"

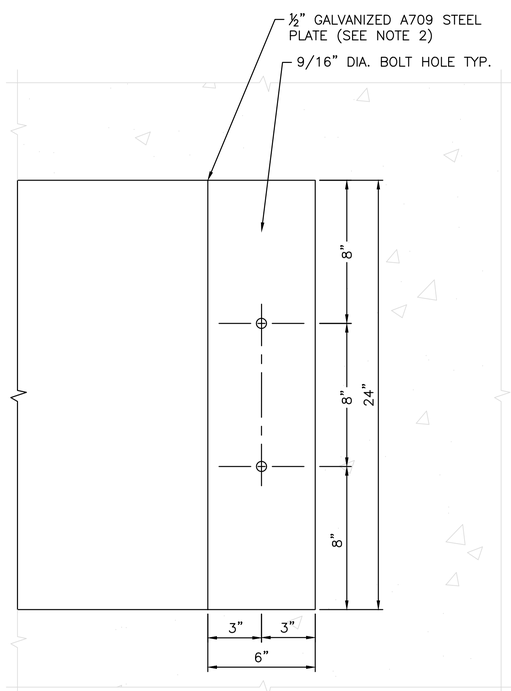

PLATE TO WALL CONNECTION ELEVATION VIEW

SCALE : $\frac{1}{4}$" = 1'–0"

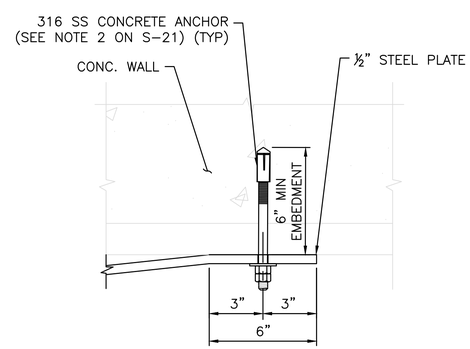

PLATE TO WALL CONNECTION TOP VIEW

SCALE : $\frac{1}{4}$" = 1'–0"

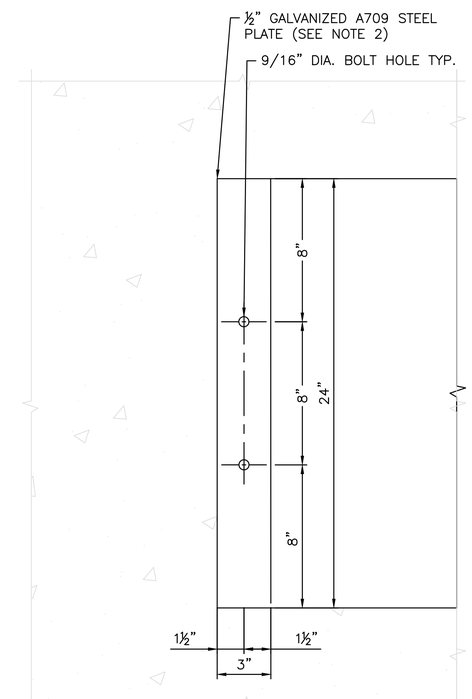

CHANNEL CONNECTION ELEVATION VIEW

SCALE : $\frac{1}{4}$" = 1'–0"

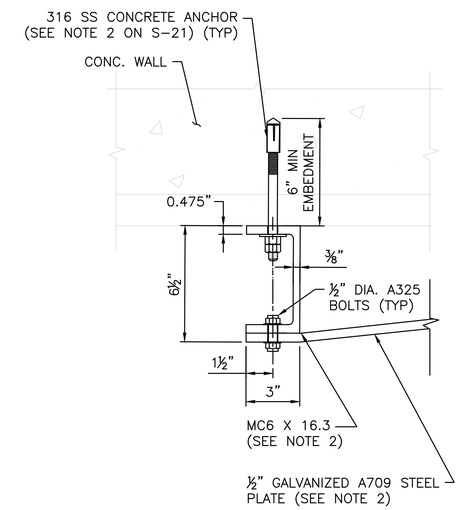

CHANNEL CONNECTION TOP VIEW

SCALE : $\frac{1}{4}$" = 1'–0"

WSP USA INC.

100 SUMMER STREET, 13TH FLOOR
BOSTON, MA. 02110

166 VALLEY STREET, BUILDING 5,
PROVIDENCE, RI 02909

WWW.WSP.COM

RHODE ISLAND PUBLIC TRANSIT AUTHORITY

RHODE ISLAND
PUBLIC TRANSIT AUTHORITY

SCALE: AS NOTED

REVISIONS			REVISIONS		
NO.	DATE	BY	NO.	DATE	BY

EAST SIDE TUNNEL REHABILITATION

PROVIDENCE RHODE ISLAND

STRUCTURAL TUNNEL DEFLECTOR DETAILS

DESIGNED BY: HPM
CHECKED BY: SCQ
DATE: 06/30/2023
PLAN NO.: S–22
SHEET: 38 OF: 81

TDETAIL–03.dwg

SHEET NOTES:

1. SEE ARCHITECTURAL SHEETS FOR OVERALL BUS SHELTER LAYOUT, DEMOLITION PLAN, AND WORK RELATED TO OTHER BUS SHELTER FEATURES.
2. EXISTING BUS SHELTER STRUCTURE MEMBERS SHOWN IN THIS DRAWING AS PART OF SURVEY SCANNING DATA. ROOF FRAMING MEMBERS AWAY FROM COLUMN 4 NOT SHOWN DUE TO LIMITED ACCESS DURING SURVEY SCANNING. CONTRACTOR SHALL VERIFY EXISTING CONDITION OF ROOF MEMBERS NOT CALLED OUT IN PLANS.
3. EXISTING SHORING FOR 8"x12" ROOF BEAM TO BE MODIFIED AS NEEDED TO ALLOW FOR THE REMOVAL OF COLUMN PIECE FROM ORIGINAL CONSTRUCTION AND FOR THE CONSTRUCTION OF NEW COLUMN AND ITS FOUNDATION. ADDITIONAL SHORING SHALL BE PROVIDED AS NEEDED FOR ROOF MEMBERS DURING DEMOLITION AND CONSTRUCTION OF NEW COLUMN AND REPLACEMENT OF TIE MEMBER AT TOP OF COLUMN. AT THE COMPLETION OF NEW COLUMN WORK, REMOVE ALL SHORING.

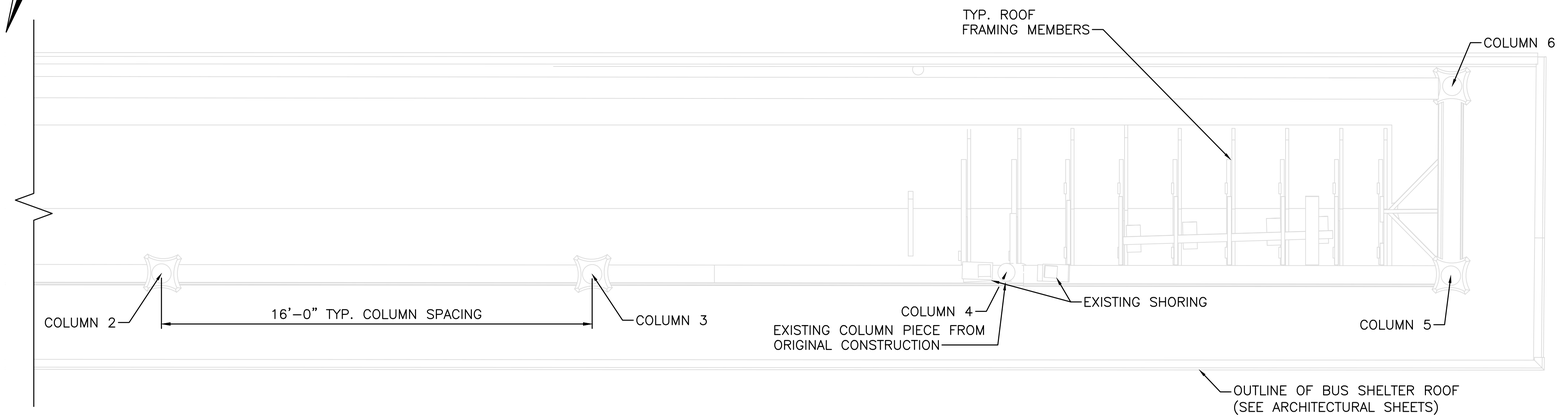

BUS SHELTER PLAN

SCALE: $\frac{3}{8}$" = 1'-0"

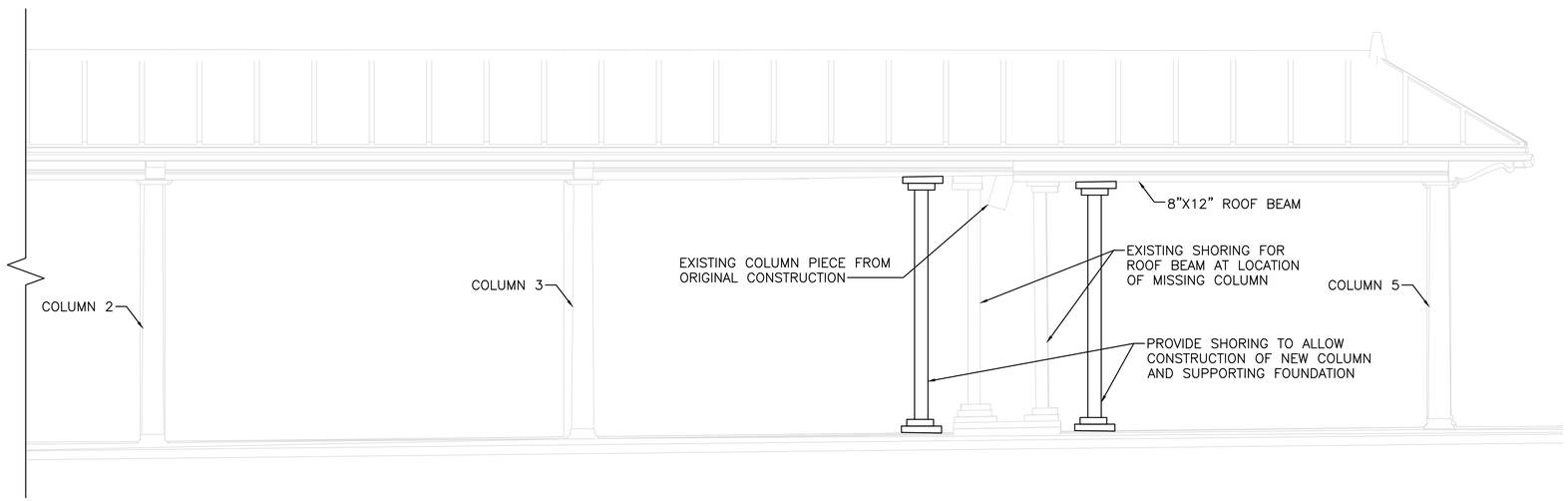

BUS SHELTER ELEVATION

SCALE: $\frac{3}{8}$" = 1'-0"

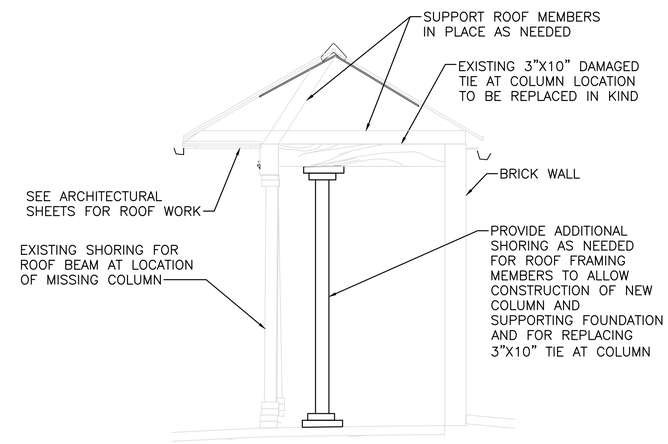

BUS SHELTER SECTION AT COLUMN 4

SCALE: $\frac{3}{8}$" = 1'-0"

WSP USA INC.
100 SUMMER STREET, 13TH FLOOR
BOSTON, MA. 02110
166 VALLEY STREET, BUILDING 5,
PROVIDENCE, RI 02909
WWW.WSP.COM

RHODE ISLAND PUBLIC TRANSIT AUTHORITY

RHODE ISLAND
PUBLIC TRANSIT AUTHORITY

SCALE: NOT TO SCALE

REVISIONS			REVISIONS		
NO.	DATE	BY	NO.	DATE	BY

EAST SIDE TUNNEL REHABILITATION

PROVIDENCE RHODE ISLAND

STRUCTURAL BUS SHELTER
REPAIR DETAILS 1

DESIGNED BY: JV
CHECKED BY: XXX
DATE: 06/30/2023
PLAN NO.: S-23
SHEET: 39 OF: 81

TDETAIL-06(BUS SHELTER-01).dwg

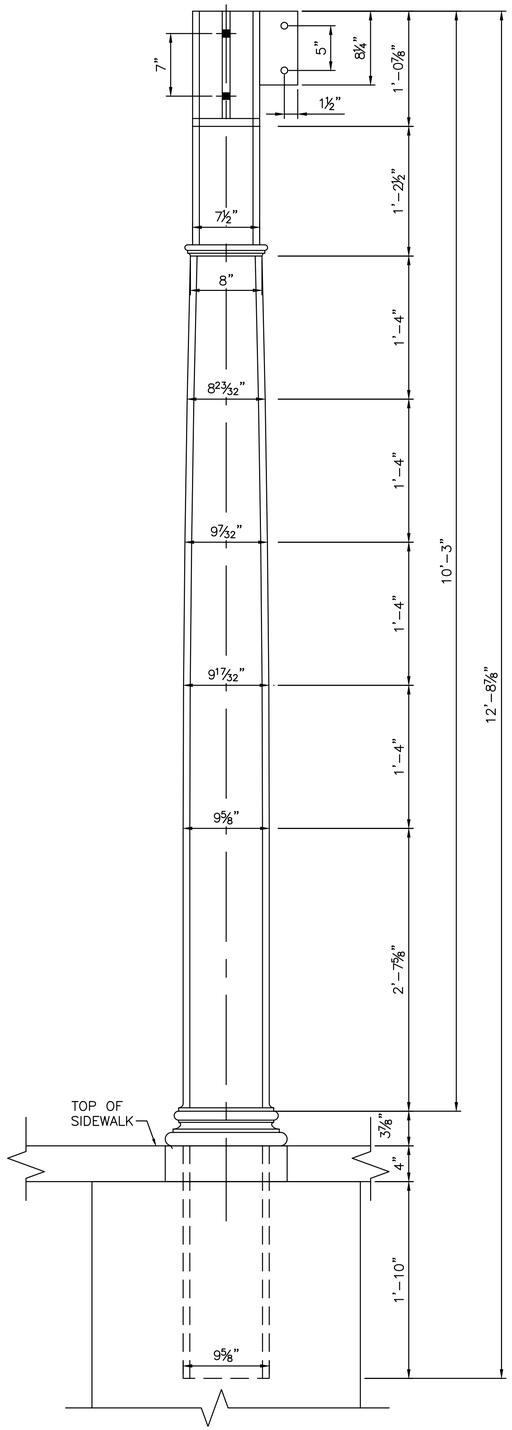

REPLACEMENT COLUMN DETAILS

SCALE: 1½" = 1'-0"

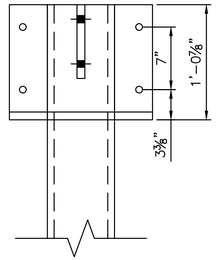

COLUMN DETAIL

SCALE: 1½" = 1'-0"

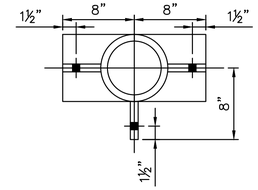

COLUMN DETAIL

SCALE: 1½" = 1'-0"

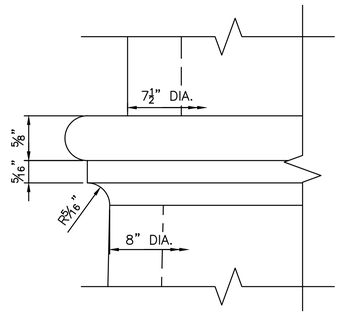

COLUMN ASTRAGAL DETAIL

SCALE: 12" = 1'-0"

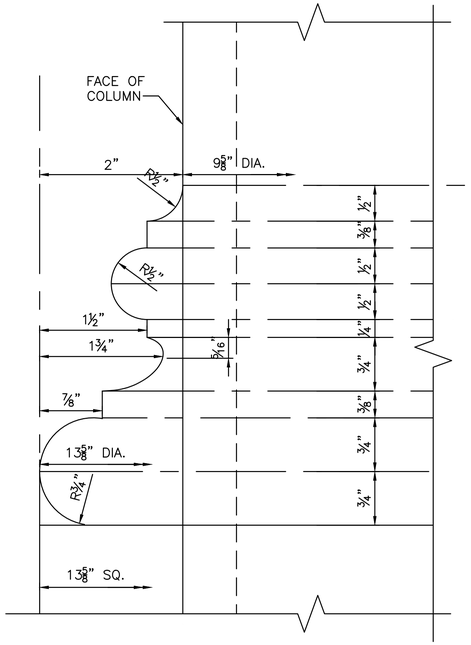

COLUMN BASE DETAIL

SCALE: 12" = 1'-0"

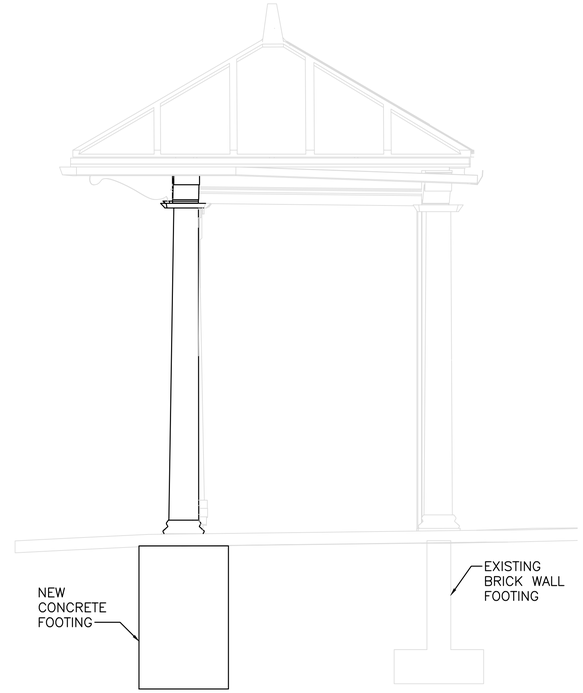

BUS SHELTER TRANSVERSE SECTION

SCALE: ½" = 1'-0"

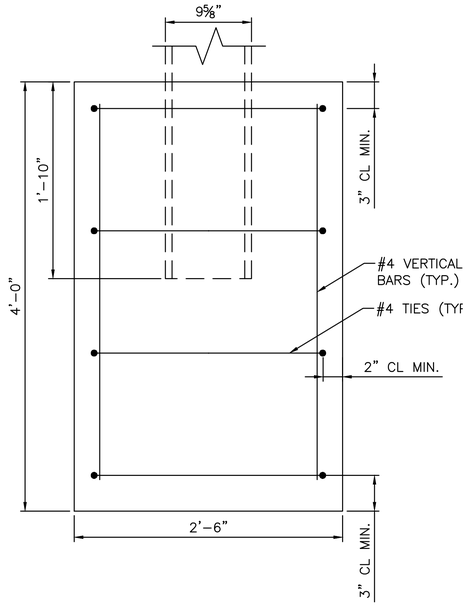

COLUMN FOOTING DETAIL 1

SCALE: 1½" = 1'-0"

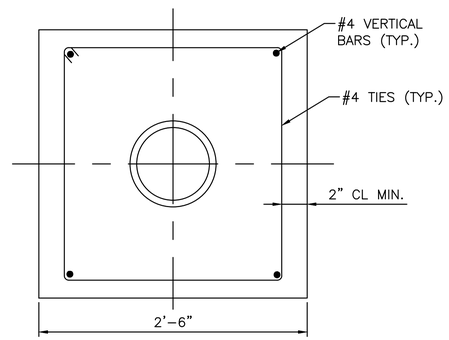

COLUMN FOOTING DETAIL 2

SCALE: 1½" = 1'-0"

SHEET NOTES:

1. BUS SHELTER REPLACEMENT COLUMN AND DETAILS SHOWN IN THIS PLAN TO BE FROM CARBON-STEEL CASTING CONFORMING TO ASTM A27 (CLASS 70 OR GRADE 70-36 STEEL) OR APPROVED ALTERNATIVE SUBMITTED TO THE ENGINEER. CASTING TO BE BLAST-CLEANED OR OTHERWISE CLEANED OF SCALE AND SAND TO PRESENT A SMOOTH, CLEAN, AND UNIFORM SURFACE. REPLACEMENT COLUMN TO BE PAINTED TO MATCH EXISTING COLUMNS AND PER SECTION 842.9901.

2. REPLACEMENT COLUMN DESIGN TO BE IDENTICAL IN APPEARANCE OF EXISTING COLUMNS. AESTHETIC FEATURES SHOWN IN THIS DRAWING REFLECT A REPLACEMENT IN-KIND OF ORIGINAL COLUMN DESIGN AND CONSTRUCTION. ALTERNATE COLUMN DESIGN CONSIDERATIONS AND FEATURES SHALL BE SUBMITTED TO THE ENGINEER FOR APPROVAL.

WSP USA INC.

100 SUMMER STREET, 13TH FLOOR
BOSTON, MA. 02110

166 VALLEY STREET, BUILDING 5,
PROVIDENCE, RI 02909

WWW.WSP.COM

RHODE ISLAND PUBLIC TRANSIT AUTHORITY

SCALE: NOT TO SCALE

REVISIONS			REVISIONS		
NO.	DATE	BY	NO.	DATE	BY

EAST SIDE TUNNEL REHABILITATION

PROVIDENCE RHODE ISLAND

STRUCTURAL BUS SHELTER REPAIR DETAILS 2

DESIGNED BY: JV
CHECKED BY: XXX
DATE: 06/30/2023
PLAN NO.: S-24
SHEET: 40 OF: 81

TDETAIL-07(BUS SHELTER-02).dwg

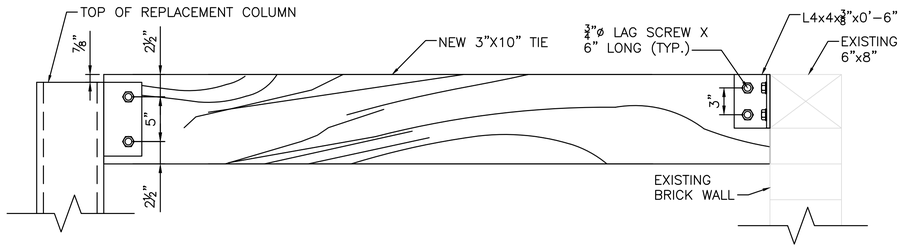

COLUMN CONNECTION DETAIL

SCALE: 1½" = 1'-0"

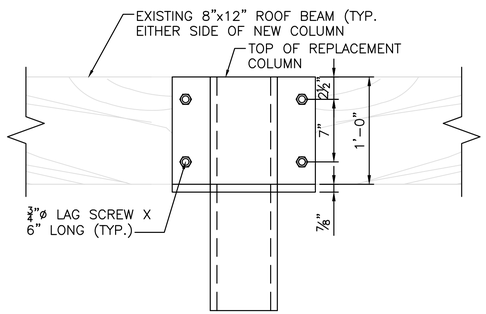

COLUMN CONNECTION DETAIL

SCALE: 1½" = 1'-0"

SHEET NOTES:

1. SEE ARCHITECTURAL DRAWINGS FOR ROOF RELATED DETAILS AND REPAIRS.
2. NEW 3"x10" COLUMN TIE TO BE A REPLACEMENT IN-KIND FOR EXISTING DAMAGED TIE BEAM.
3. EXISTING 8"x12" BEAMS TO BE SHORED IN PLACE AS NEEDED TO ACHIEVE CONNECTION WITH NEW REPLACEMENT COLUMN.

WSP USA INC.
100 SUMMER STREET, 13TH FLOOR
BOSTON, MA. 02110
166 VALLEY STREET, BUILDING 5,
PROVIDENCE, RI 02909
WWW.WSP.COM

RHODE ISLAND
PUBLIC TRANSIT AUTHORITY

SCALE: NOT TO SCALE

REVISIONS			REVISIONS		
NO.	DATE	BY	NO.	DATE	BY

EAST SIDE TUNNEL REHABILITATION

PROVIDENCE RHODE ISLAND

STRUCTURAL BUS SHELTER
REPAIR DETAILS 3

DESIGNED BY: JV
CHECKED BY: XXX
DATE: 06/30/2023
PLAN NO.: S-25
SHEET: 41 OF: 81

TDETAIL-08(BUS SHELTER-03).dwg

MATERIALS LEGEND

- BATT. INSULATION
- CONCRETE MASONARY UNIT
- CAST IN PLACE CONCRETE
- EXISTING UNDISTURBED SUB-GRADE
- WOOD BLOCKING
- COMPACTED FILL
- WOOD SHIM
- FINISH WOOD
- STEEL
- ALUMINUM
- PLYWOOD
- FOAM INSULATION

WORK NOTES LEGEND

- NEW WORK KEYNOTES #
- DEMOLITION KEYNOTES #
- PHOTO ID & DIRECTION INDICATOR #

GENERAL SYMBOLS

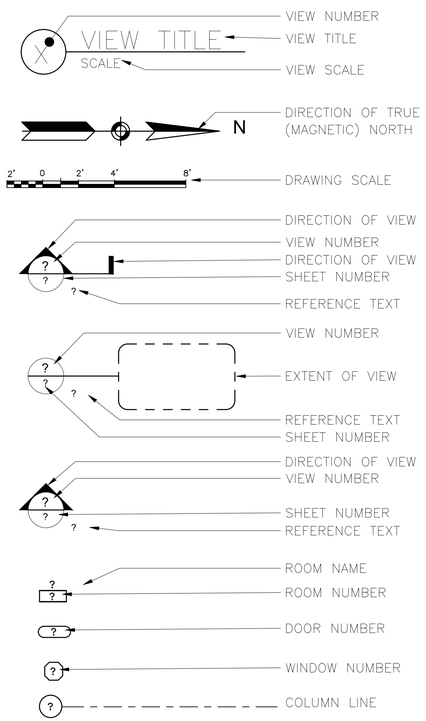

GENERAL NOTES:

1. IF DRAWING IS LESS THAN 24"X36" IT IS A REDUCED DRAWING. REDUCE NUMERICAL SCALE ACCORDINGLY.
2. THIS DRAWING COVERS ABBREVIATIONS, SYMBOLS AND GENERAL NOTES FOR THE ARCHITECTURAL DISCIPLINES ONLY SEE DRAWINGS OF ALL OTHER DISCIPLINES FOR THEIR GENERAL NOTES, SYMBOLS, AND ABBREVIATIONS.
3. REFER TO PROJECT SPECIFICATIONS FOR GENERAL CONTRACT REQUIREMENTS, MATERIALS, WORKMANSHIP AND SHOP DRAWINGS.
4. UNLESS GRAPHICALLY INDICATED OR OTHERWISE NOTED "EXISTING", ALL MATERIALS ARE NEW. ALL ELEMENTS SHOWN GRAYED OUT ARE EXISTING TO REMAIN UNLESS OTHERWISE NOTED.
5. CONTRACTOR SHALL VERIFY ALL PROPOSED AND EXISTING DIMENSIONS AND ELEVATIONS IN THE FIELD. CONTRACTOR SHALL VERIFY ALL EXISTING CONDITIONS IN THE FIELD. NOTIFY THE ARCHITECT IMMEDIATELY AND BEFORE PROCEEDING WITH RELEVANT ASPECT OF THE WORK OF ANY LAYOUT CONDITION THAT IS NOT CONSISTENT WITH THE PLANS OR THAT WILL IMPAIR LAYOUTS OR ATTACHMENTS OF FINISHES.
6. ALL DIMENSIONS SHALL BE FIELD COORDINATED BY THE CONTRACTOR WITH DRAWINGS OF ALL OTHER DISCIPLINES. ANY INCONSISTENCIES SHALL BE REPORTED TO THE ARCHITECT BEFORE PROCEEDING WITH THE WORK.
7. WHERE DISCREPANCIES EXIST BETWEEN THE DRAWINGS OF THE VARIOUS TRADES, CONSULT THE ARCHITECT BEFORE PROCEEDING WITH WORK.
8. COORDINATE PLACEMENT OF ALL CEILING ELEMENTS WITH MECHANICAL, ELECTRICAL, AND ALARM INSTALLERS.
9. CONTRACTOR SHALL COORDINATE SIZE AND LOCATION OF ALL SLAB AND WALL OPENINGS INCLUDING, BUT NOT LIMITED TO, OPENINGS IN ELECTRICAL CLOSETS, CONTROL ROOMS, BOILER AND MECHANICAL ROOMS, SHAFTS, ETC., PER EQUIPMENT MANUFACTURER RECOMMENDATIONS.
10. DO NOT SCALE DRAWINGS. USE INDICATED OR CALCULATED DIMENSIONS AND ELEVATIONS IN THE FIELD. NOTIFY THE ARCHITECT IMMEDIATELY AND BEFORE PROCEEDING WITH RELEVANT ASPECT OF THE WORK OF ANY LAYOUT CONDITIONS THAT ARE NOT CONSISTENT WITH THE PLANS OR THAT WILL IMPAIR LAYOUT.
11. DIMENSIONING FORMAT FOR THE ARCHITECTURAL DRAWINGS IS:
    A. DIMENSIONS FOR PRECAST ELEMENTS ARE TO THE FACE OF THE ELEMENT UNLESS OTHERWISE NOTED.
    B. DIMENSIONS FOR MASONRY ARE ACTUAL UNLESS OTHERWISE NOTED.
    C. DIMENSIONS FOR THE STUD WALLS ARE TO FINISH FACE OF THE WALL UNLESS OTHERWISE NOTED.
    D. CRITICAL CLEAR DIMENSIONS, FINISH OPENING AND REQUIRED ROUGH OPENING ARE INDICATED AND ARE TO FINISH FACE OF THE ELEMENT.
12. BACK-KEYING REFERENCES ARE NOT INTENDED TO GIVE QUANTITY OF, AND ALL LOCATIONS, IN WHICH A PARTICULAR DETAIL OCCURS, BUT ARE TO AID CONTRACTOR IN FINDING SAMPLE LOCATION(S) IN WHICH A PARTICULAR DETAIL OCCURS.
13. DETAILED DRAWINGS AND LARGER SCALE DRAWINGS TAKE PRECEDENCE OVER SMALL SCALE DRAWINGS.
14. ALL INDICATIONS AND NOTATIONS ON THE DRAWING APPLYING TO ONE AREA OR CONDITION APPLY TO OTHER SIMILAR AREAS OR CONDITIONS UNLESS OTHERWISE NOTED. DETAILS NOT SHOWN ARE SIMILAR IN CHARACTER TO DETAILS SHOWN. WHERE SPECIFIC DIMENSIONS, DETAILS OR DESIGN INTENT CANNOT BE DETERMINED, CONSULT THE ARCHITECT BEFORE PROCEEDING WITH WORK.
15. ALL DRAWING AND CONSTRUCTION NOTES ARE COMPLEMENTARY AND WHAT IS CALLED FOR BY EITHER WILL BE BINDING AS IF CALLED FOR BY ALL. ANY WORK SHOWN OR REFERRED TO ON ONE DRAWING SHALL BE PROVIDED AS THOUGH SHOWN ON ALL RELATED DRAWINGS.
16. REFER TO STRUCTURAL DRAWINGS FOR DIMENSIONS AND LAYOUT OF STRUCTURAL ELEMENTS.
17. REFER TO STRUCTURAL DRAWINGS FOR STRUCTURAL STEEL SIZES, ALL CONCRETE REINFORCEMENT, UNIT MASONRY REINFORCEMENT AND ALL OTHER REQUIREMENTS FOR LOAD CARRYING MEMBERS. STRUCTURAL DRAWINGS SHALL GOVERN FOR LOAD CARRYING MEMBERS.
18. REFER TO PLUMBING AND ELECTRICAL DRAWINGS FOR SLEEVES, PENETRATIONS AND EMBEDMENTS REQUIRED FOR THESE SYSTEMS. THE CONTRACTOR SHALL COORDINATE ALL EMBEDMENTS AND PENETRATIONS.
19. REFER ALSO TO SIGNAGE, CIVIL, STRUCTURAL, PLUMBING, MECHANICAL, ELECTRICAL DRAWINGS AND APPROVED SHOP DRAWINGS FOR LOCATION AND DIMENSIONS OF CHASES, INSERTS, OPENING SLEEVES, DEPRESSIONS AND ATTACHMENTS.
20. ISOLATE DISSIMILAR METALS AND CORROSIVE MATERIALS FROM DIRECT CONTACT AS INDICATED OR BY THE USE OF NEOPRENE OR EPDM WASHERS/GASKETS OR BY OTHER MEANS TO ELIMINATE OPPORTUNITIES FOR GALVANIC ACTIONS, AS APPROVED BY ARCHITECT.
21. CONTRACTOR SHALL NOTIFY THE ARCHITECT IN WRITING WHERE EXISTING CONDITIONS DIFFER FROM THOSE INDICATED HEREIN.

WSP USA INC.
100 SUMMER STREET, 13TH FLOOR
BOSTON, MA. 02110
166 VALLEY STREET, BUILDING 5,
PROVIDENCE, RI 02909
WWW.WSP.COM

RHODE ISLAND PUBLIC TRANSIT AUTHORITY

RHODE ISLAND
PUBLIC TRANSIT AUTHORITY

SCALE: NOT TO SCALE

REVISIONS			REVISIONS		
NO.	DATE	BY	NO.	DATE	BY

EAST SIDE TUNNEL REHABILITATION

PROVIDENCE RHODE ISLAND

ARCHITECTURAL SYMBOLS, NOTES, AND ABBREVIATIONS

DESIGNED BY: GS
CHECKED BY: LCM
DATE: 06/30/2023
PLAN NO.: A-01
SHEET: 42 OF: 81

ARCH-NOTSYM.dwg

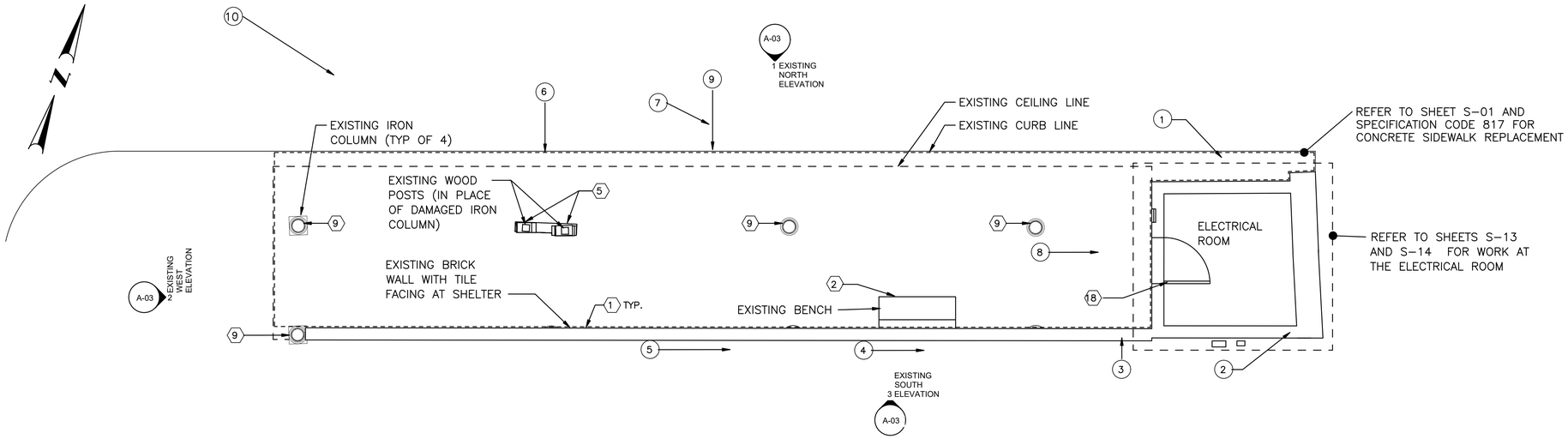

1 BUS SHELTER DEMOLITION WORK PLAN
1/4" = 1'-0"

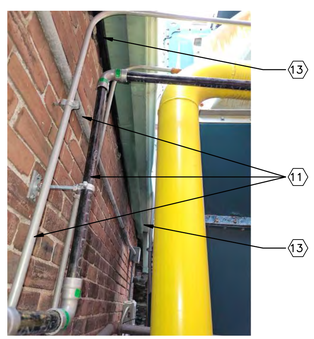

PHOTO 5: EXISTING CONDUITS

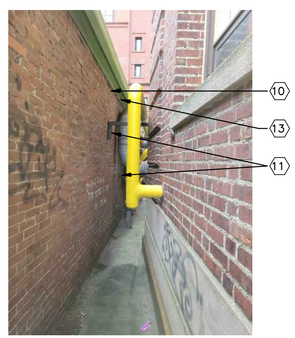

PHOTO 4: REAR SOUTH WALL CONNECTING RHODE ISLAND SCHOOL OF DESIGN

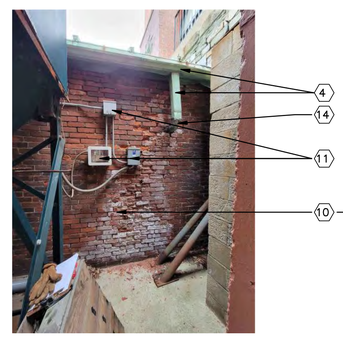

PHOTO 3: EXISTING CONDUITS AT SOUTH WALL

PHOTO 2: BRICK WALL AT CORNER SOUTH-EAST JOINT

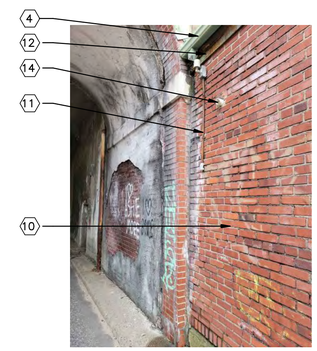

PHOTO 1: BRICK WALL AND CONDUIT AT NORTH WALL OF ELECTRICAL ROOM

EXISTING CONDITIONS PHOTOS

GENERAL NOTES:

1. REFER TO SHEET A-01 FOR ARCHITECTURAL SYMBOLS, NOTES AND ABBREVIATIONS.
2. REFER TO STRUCTURAL SHEETS FOR BRICK REPAIR ELEVATIONS, AND COLUMN REPAIRS.
3. REFER TO ELECTRICAL SHEETS FOR ELECTRICAL SCOPE.
4. REFER TO LIGHTING SHEETS FOR LIGHTING SCOPE.
5. REFER TO SPECIFICATION CODE 807.0350 MASONRY CLEANING, REPAIRING, AND REPOINTING FOR BRICK REPAIR AND CLEANING WORK.
6. REFER TO CIVIL AND STRUCTURAL SHEETS FOR COLUMN REPAIR, CONCRETE PAVEMENT AND SLAB WORK AND FOR CONNECTIONS OF ROOF DRAINAGE TO STREET DRAINING.
7. REFER TO SHEET A-06 FOR NEW BENCH WORK.
8. COAT TUNNEL WALL AND SIGNAGE IN ACCORDANCE WITH CODE 842 ANTI-GRAFFITI COATING.

GENERAL DEMOLITION NOTES:

1. PROVIDE PROTECTION FOR EXISTING CONDUIT PIPE AND OTHER EQUIPMENT REMAINING ON THE ROOF AND ALONG THE REAR BRICK WALL DURING REPAIR AND REPLACEMENT WORK.
2. REMOVE AND PROPERLY DISPOSE OF DEMOLISHED MATERIALS.
3. ALL AREAS EXPOSED DURING THE CONSTRUCTION PERIOD SHALL BE PROTECTED AND MADE WEATHER TIGHT THROUGHOUT THE CONSTRUCTION.
4. ALL ITEMS DESIGNATED FOR REMOVAL AND REUSE SHALL BE REMOVED WITH SPECIAL CARE TO PROTECT THE ITEM AS MUCH AS POSSIBLE AND STORE AS REQUIRED TO PREVENT ANY DAMAGE UNTIL IT IS REUSED / RETURNED. STORAGE LOCATION OF ITEMS SHALL BE COORDINATED WITH RIPTA.
5. REMOVE ALL PAINT FROM SHEET METAL AT THE SHELTER SOFFIT. EXISTING PAINT HAS LEAD CONTENT. CONTRACTOR SHALL BE RESPONSIBLE FOR REMOVAL OF PAINT FROM EXISTING ELEMENTS DESIGNATED TO REMAIN AND FOR LEGAL HANDLING AND DISPOSAL OF PAINTED ELEMENTS THAT ARE DESIGNATED FOR DEMOLITION AND REMOVED PAINT PRODUCT. PAINT REMOVAL SHALL BE DONE IN THE MOST GENTILE MEANS POSSIBLE TO ACHIEVE SATISFACTORY RESULTS, PER APPROVED HISTORIC REVIEW AND MOCKUP.
6. REMOVE ALL PAINT, CARBON STAINING, BIOLOGICAL GROWTH AND/OR EFLOURESCENT STAINING FROM MASONRY IN THE MOST GENTILE MEANS POSSIBLE TO ACHIEVE SATISFACTORY RESULTS, PER APPROVED HISTORIC REVIEW AND MOCKUP.
7. REMOVE DETERIORATED OR DAMAGED METAL TRIM AND PANELS IN THEIR ENTIRETY TO THE ADJACENT UNDAMAGED PANEL/TRIM. PROTECT ADJACENT ELEMENTS FROM DAMAGE.
8. DEMOLITION KEYNOTE NUMBERS SHOWN ON THE DRAWINGS IDENTIFY TYPICAL LOCATIONS AND ELEMENTS OF DEMOLITION WORK. THE CONTRACTOR IS RESPONSIBLE FOR ALL SIMILAR ITEMS, WHETHER OR NOT SPECIFICALLY IDENTIFIED. SIMILAR TO THE INTENT OF NOTE 12 ON SHEET A-01.

DEMOLITION KEYNOTES: ←

1. REMOVE ENTIRE WALL TILE AND MORTAR FROM BRICK WALL. PROTECT BRICK FROM DAMAGE. CONTRACTOR TO PERFORM HAZARDOUS CONDITIONS INSPECTION ON TILE AND MORTAR TO CONFIRM MATERIALS ARE FREE OF ASBESTOS.
2. REMOVE EXISTING BENCH. REFER TO GENERAL NOTE 7.
3. REMOVE ALL EXISTING LIGHT FIXTURES. REFER TO ELECTRICAL SHEETS.
4. REMOVE EXISTING GUTTERS AND RAIN LEADERS ALL AROUND INCLUDING BRACKETS. BRACKET REMOVAL SHALL BE DONE WITHOUT DAMAGING THE EXISTING COPPER ROOF.

DEMOLITION KEYNOTES (cont'd):

5. REMOVE TEMPORARY WOOD COLUMNS AND SHORING. REMOVE BROKEN COLUMN STUB. REFER TO STRUCTURAL SHEETS.
6. REMOVE DEBRIS FROM EXISTING ROOFING SYSTEM.
7. REMOVE DAMAGED WOODEN PLANKS AT CEILING OF BUS SHELTER. PROTECT CEILING WOOD PLANKS TO REMAIN FROM ADDITIONAL DAMAGE.
8. REMOVE EXISTING VISE ON TOP OF ROOF.
9. REMOVE EXISTING BROKEN COLUMN CROWN AND ALL CERAMIC BEES NEST ART SCULPTURE FROM COLUMNS.
10. REMOVE EXISTING BROKEN,DAMAGED BRICKS.

DEMOLITION KEYNOTES (cont'd):

11. PROTECT ELECTRICAL CONDUITS AND EQUIPMENT WHILE PERFORMING BRICK REPAIR.
12. REMOVE ALL DAMAGED COPPER CLADDING AND TRIM.
13. REMOVE ALL DAMAGED COPPER SOFFITS.
14. REMOVE ENTIRE DRAIN PIPE.
15. REMOVE PAINT FROM ROOF PANELS.
16. REMOVE DIRT AND DEBRIS FROM EXISTING FLASHING.

DEMOLITION KEYNOTES (cont'd):

17. REMOVE PAINT FROM COPPER SOFFIT COFFERS, CLADDING AND TRIM
18. REMOVE EXISTING DOOR AND FRAME AT ELECTRICAL ROOM

WSP USA INC.
100 SUMMER STREET, 13TH FLOOR
BOSTON, MA. 02110
166 VALLEY STREET, BUILDING 5,
PROVIDENCE, RI 02909
WWW.WSP.COM

RHODE ISLAND PUBLIC TRANSIT AUTHORITY

RHODE ISLAND
PUBLIC TRANSIT AUTHORITY

SCALE: 1/4"=1'-0"
2' 0 2' 4' 8'

REVISIONS			REVISIONS		
NO.	DATE	BY	NO.	DATE	BY

EAST SIDE TUNNEL REHABILITATION
PROVIDENCE RHODE ISLAND

OVERALL BUS SHELTER FLOOR DEMOLITION PLAN & PHOTOS

DESIGNED BY: GS
CHECKED BY: LCM
DATE: 06/30/2023
PLAN NO.: A-02
SHEET: 43 OF: 81

ARCH-DEM0001.dwg

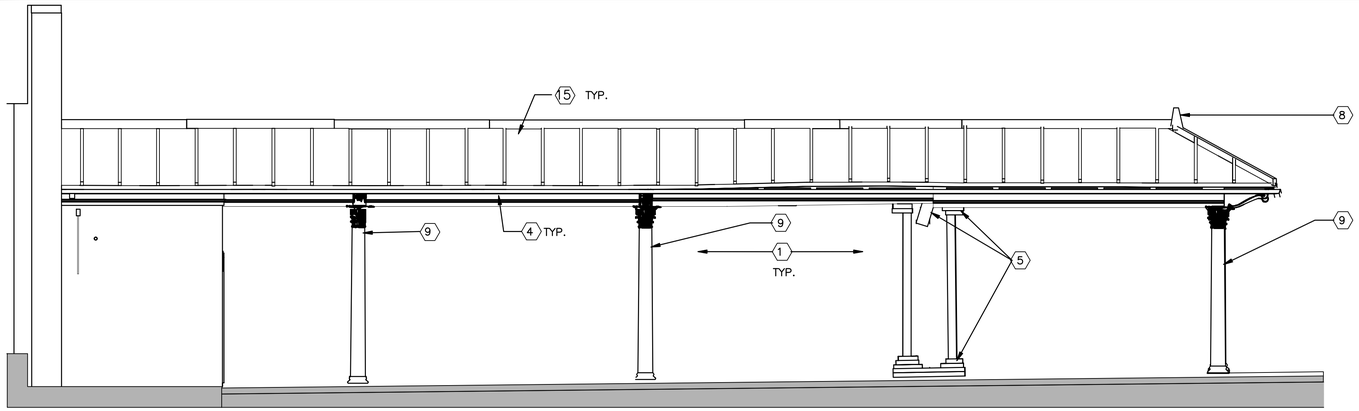

1 A-02 EXISTING NORTH ELEVATION
1/4" = 1'-0"

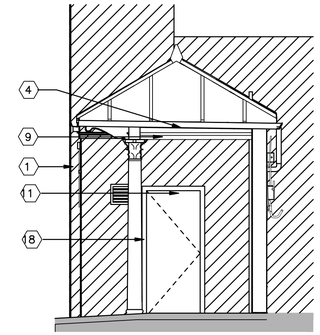

2 A-02 EXISTING WEST ELEVATION
1/4" = 1'-0"

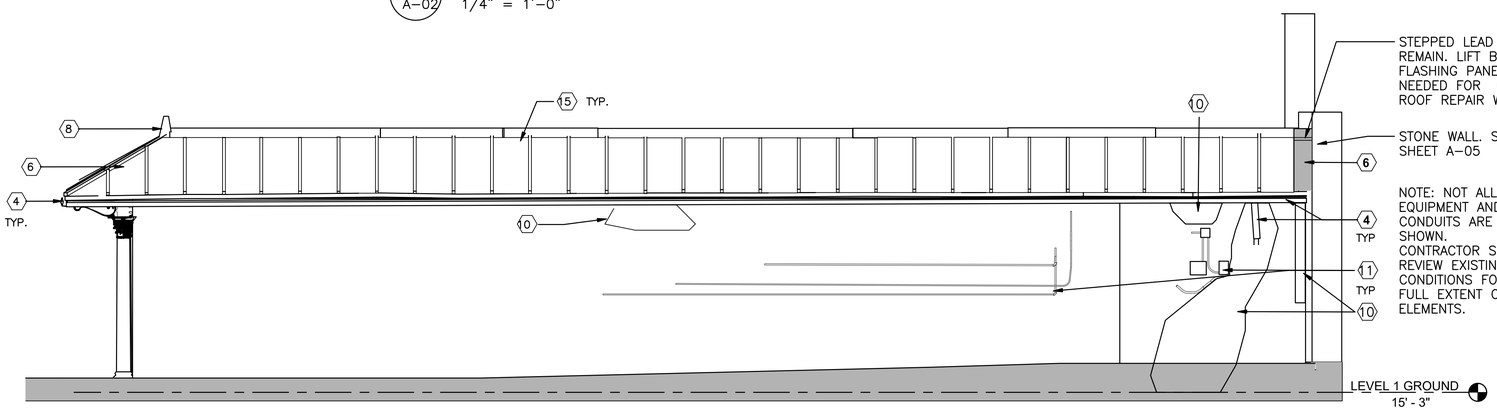

3 A-02 EXISTING SOUTH ELEVATION
1/4" = 1'-0"

PHOTO 10: BUS SHELTER VIEW FROM WATERMAN STREET

PHOTO 9: TILE WALL AT BUS SHELTER

PHOTO 8: DOOR TO ELECTRICAL ROOM REFER TO SHEETS S-14 AND A-09 FOR ADDITIONAL INFORMATION.

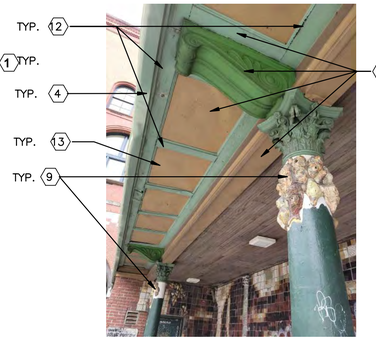

PHOTO 7: COLUMN CROWN AND BRACKET AND "BEE NEST" ART ON COLUMN

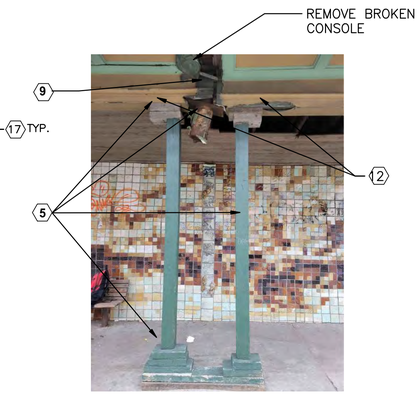

PHOTO 6: DAMAGED METAL COLUMN TEMPORARY COLUMNS IN PLACE OF MISSING COLUMNS

GENERAL NOTES:

1. REFER TO SHEET A-01 FOR ARCHITECTURAL SYMBOLS, NOTES AND ABBREVIATIONS.
2. REFER TO STRUCTURAL SHEETS FOR BRICK REPAIR ELEVATIONS, AND COLUMN REPAIRS.
3. REFER TO ELECTRICAL SHEETS FOR ELECTRICAL SCOPE.
4. REFER TO LIGHTING SHEETS FOR LIGHTING SCOPE.
5. REFER TO SPECIFICATION CODE 807.0350 MASONRY CLEANING, REPAIRING, AND REPOINTING FOR BRICK REPAIR AND CLEANING WORK.
6. REFER TO CIVIL AND STRUCTURAL SHEETS FOR COLUMN REPAIR, CONCRETE PAVEMENT AND SLAB WORK AND FOR CONNECTIONS OF ROOF DRAINAGE TO STREET DRAINING.
7. REFER TO SHEET A-06 FOR NEW BENCH WORK.
8. COAT TUNNEL WALL AND SIGNAGE IN ACCORDANCE WITH CODE 842 ANTI-GRAFFITI COATING.

GENERAL DEMOLITION NOTES:

1. PROVIDE PROTECTION FOR EXISTING CONDUIT PIPE AND OTHER EQUIPMENT REMAINING ON THE ROOF AND ALONG THE REAR BRICK WALL DURING REPAIR AND REPLACEMENT WORK.
2. REMOVE AND PROPERLY DISPOSE OF DEMOLISHED MATERIALS.
3. ALL AREAS EXPOSED DURING THE CONSTRUCTION PERIOD SHALL BE PROTECTED AND MADE WEATHER TIGHT THROUGHOUT THE CONSTRUCTION.
4. ALL ITEMS DESIGNATED FOR REMOVAL AND REUSE SHALL BE REMOVED WITH SPECIAL CARE TO PROTECT THE ITEM AS MUCH AS POSSIBLE AND STORE AS REQUIRED TO PREVENT ANY DAMAGE UNTIL IT IS REUSED / RETURNED. LOCATION OF ITEMS SHALL BE COORDINATED WITH RIPTA.
5. REMOVE ALL PAINT FROM SHEET METAL AT THE SHELTER SOFFIT. EXISTING PAINT HAS LEAD CONTENT. CONTRACTOR SHALL BE RESPONSIBLE FOR REMOVAL OF PAINT FROM EXISTING ELEMENTS DESIGNATED TO REMAIN AND FOR LEGAL HANDLING AND DISPOSAL OF PAINTED ELEMENTS THAT ARE DESIGNATED FOR DEMOLITION AND REMOVED PAINT PRODUCT. PAINT REMOVAL SHALL BE DONE IN THE MOST GENTILE MEANS POSSIBLE TO ACHIEVE SATISFACTORY RESULTS, PER APPROVED HISTORIC REVIEW AND MOCKUP.
6. REMOVE ALL PAINT, CARBON STAINING, BIOLOGICAL GROWTH AND/OR EFLOURESCENT STAINING FROM MASONRY IN THE MOST GENTILE MEANS POSSIBLE TO ACHIEVE SATISFACTORY RESULTS, PER APPROVED HISTORIC REVIEW AND MOCKUP.
7. REMOVE DETERIORATED OR DAMAGED METAL TRIM AND PANELS IN THEIR ENTIRETY TO THE ADJACENT UNDAMAGED PANEL/TRIM. PROTECT ADJACENT ELEMENTS FROM DAMAGE.
8. DEMOLITION KEYNOTE NUMBERS SHOWN ON THE DRAWINGS IDENTIFY TYPICAL LOCATIONS AND ELEMENTS OF DEMOLITION WORK. THE CONTRACTOR IS RESPONSIBLE FOR ALL SIMILAR ITEMS, WHETHER OR NOT SPECIFICALLY IDENTIFIED. SIMILAR TO THE INTENT OF NOTE 12 ON SHEET A-01.

EXISTING CONDITIONS PHOTOS

DEMOLITION KEYNOTES:

(#)

(1) REMOVE ENTIRE WALL TILE AND MORTAR FROM BRICK WALL. PROTECT BRICK FROM DAMAGE. CONTRACTOR TO PERFORM HAZARDOUS CONDITIONS INSPECTION ON TILE AND MORTAR TO CONFIRM MATERIALS ARE FREE OF ASBESTOS.

(2) REMOVE EXISTING BENCH. REFER TO GENERAL NOTE 7.

(3) REMOVE ALL EXISTING LIGHT FIXTURES. REFER TO ELECTRICAL SHEETS.

(4) REMOVE EXISTING GUTTERS AND RAIN LEADERS ALL AROUND INCLUDING BRACKETS. BRACKET REMOVAL SHALL BE DONE WITHOUT DAMAGING THE EXISTING COPPER ROOF.

DEMOLITION KEYNOTES (cont'd):

(5) REMOVE TEMPORARY WOOD COLUMNS AND SHORING. REMOVE BROKEN COLUMN STUB. REFER TO STRUCTURAL SHEETS.

(6) REMOVE DEBRIS FROM EXISTING ROOFING SYSTEM.

(7) REMOVE DAMAGED WOODEN PLANKS AT CEILING OF BUS SHELTER. PROTECT CEILING WOOD PLANKS TO REMAIN FROM ADDITIONAL DAMAGE.

(8) REMOVE EXISTING VISE ON TOP OF ROOF.

(9) REMOVE EXISTING BROKEN COLUMN CROWN AND ALL CERAMIC BEES NEST ART SCULPTURE FROM COLUMNS.

(10) REMOVE EXISTING BROKEN,DAMAGED BRICKS.

DEMOLITION KEYNOTES (cont'd):

(11) PROTECT ELECTRICAL CONDUITS AND EQUIPMENT WHILE PERFORMING BRICK REPAIR.

(12) REMOVE ALL DAMAGED COPPER CLADDING AND TRIM.

(13) REMOVE ALL DAMAGED COPPER SOFFITS.

(14) REMOVE ENTIRE DRAIN PIPE.

(15) REMOVE PAINT FROM ROOF PANELS.

(16) REMOVE DIRT AND DEBRIS FROM EXISTING FLASHING.

DEMOLITION KEYNOTES (cont'd):

(17) REMOVE PAINT FROM COPPER SOFFIT COFFERS, CLADDING AND TRIM.

(18) REMOVE EXISTING DOOR AND FRAME AT ELECTRICAL ROOM

WSP USA INC.
100 SUMMER STREET, 13TH FLOOR
BOSTON, MA. 02110
166 VALLEY STREET, BUILDING 5,
PROVIDENCE, RI 02909
WWW.WSP.COM

RHODE ISLAND PUBLIC TRANSIT AUTHORITY

RHODE ISLAND
PUBLIC TRANSIT AUTHORITY

SCALE: 1/4"=1'-0"
2' 0 2' 4' 8'

REVISIONS			REVISIONS		
NO.	DATE	BY	NO.	DATE	BY

EAST SIDE TUNNEL REHABILITATION
PROVIDENCE RHODE ISLAND

OVERALL BUS SHELTER DEMOLITION ELEVATIONS, PLAN & PHOTOS

DESIGNED BY: GS
CHECKED BY: LCM
DATE: 06/30/2023
PLAN NO.: A-03
SHEET: 44 OF: 81

ARCH-DEMO002.dwg

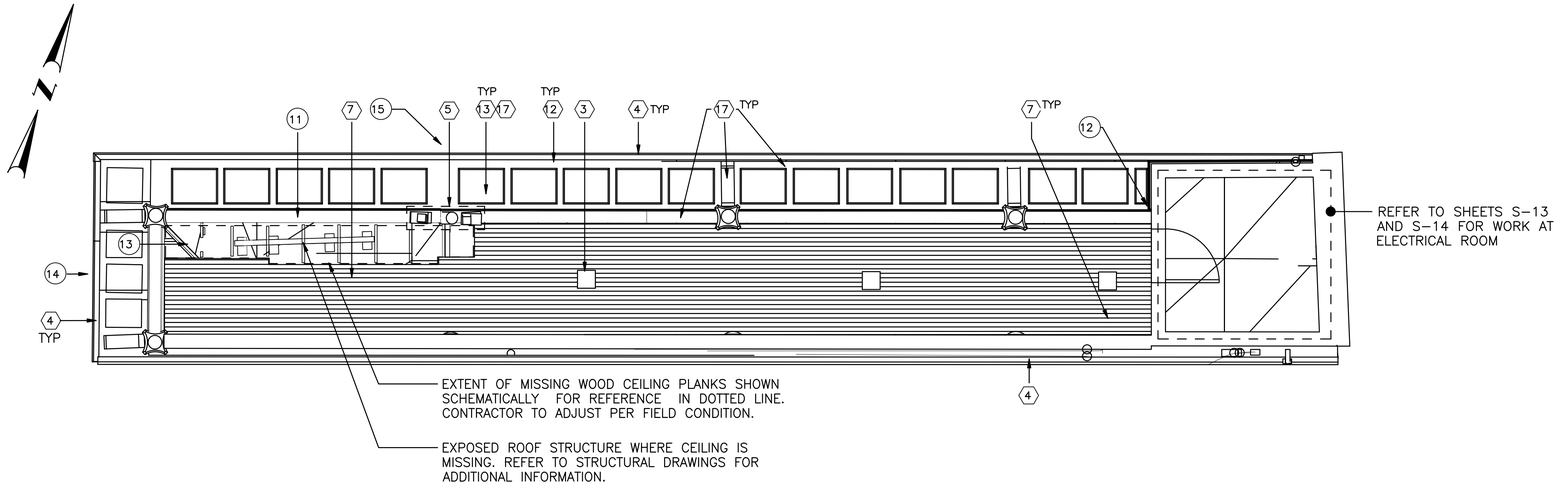

1 CEILING DEMOLITION PLAN
1/4" = 1'-0"

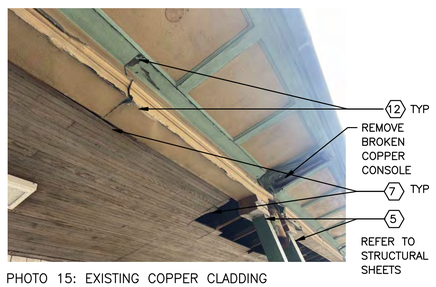

PHOTO 15: EXISTING COPPER CLADDING

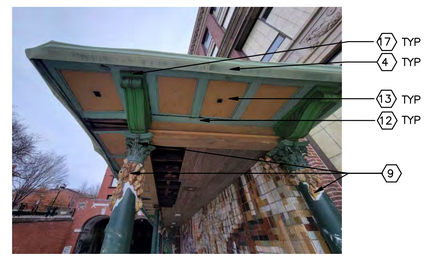

PHOTO 14: COPPER BRACKETS UNDER BUS SHELTER

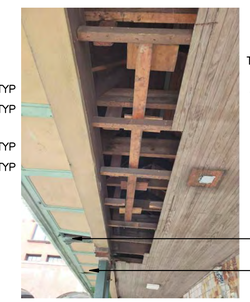

PHOTO 13: EXISTING WOOD SHEATHING AND PLANKS

PHOTO 12: EXISTING COPPER SOFFITS AND CONSOLES AT ELECTRICAL ROOM

PHOTO 11: EXISTING DAMAGED WOODEN FRAMES

EXISTING CONDITIONS PHOTOS

DEMOLITION KEYNOTES:

1. REMOVE ENTIRE WALL TILE AND MORTAR FROM BRICK WALL. PROTECT BRICK FROM DAMAGE. CONTRACTOR TO PERFORM HAZARDOUS CONDITIONS INSPECTION ON TILE AND MORTAR TO CONFIRM MATERIALS ARE FREE OF ASBESTOS.
2. REMOVE EXISTING BENCH. REFER TO GENERAL NOTE 7.
3. REMOVE ALL EXISTING LIGHT FIXTURES. REFER TO ELECTRICAL SHEETS.
4. REMOVE EXISTING GUTTERS AND RAIN LEADERS ALL AROUND INCLUDING BRACKETS. BRACKET REMOVAL SHALL BE DONE WITHOUT DAMAGING THE EXISTING COPPER ROOF.
5. REMOVE TEMPORARY WOOD COLUMNS AND SHORING. REMOVE BROKEN COLUMN STUB. REFER TO STRUCTURAL SHEETS.
6. REMOVE DEBRIS FROM EXISTING ROOFING SYSTEM.
7. REMOVE DAMAGED WOODEN PLANKS AT CEILING OF BUS SHELTER. PROTECT CEILING WOOD PLANKS TO REMAIN FROM ADDITIONAL DAMAGE.
8. REMOVE EXISTING VISE ON TOP OF ROOF.

DEMOLITION KEYNOTES (cont'd):

9. REMOVE EXISTING BROKEN COLUMN CROWN AND ALL CERAMIC BEES NEST ART SCULPTURE FROM COLUMNS.
10. REMOVE EXISTING BROKEN,DAMAGED BRICKS.
11. PROTECT ELECTRICAL CONDUITS AND EQUIPMENT WHILE PERFORMING BRICK REPAIR.
12. REMOVE ALL DAMAGED COPPER CLADDING AND TRIM.
13. REMOVE ALL DAMAGED COPPER SOFFITS.
14. REMOVE ENTIRE DRAIN PIPE.
15. REMOVE PAINT FROM ROOF PANELS.
16. REMOVE DIRT AND DEBRIS FROM EXISTING FLASHING.
17. REMOVE PAINT FROM COPPER SOFFIT COFFERS, CLADDING AND TRIM
18. REMOVE EXISTING DOOR AND FRAME AT ELECTRICAL ROOM

GENERAL NOTES:

1. REFER TO SHEET A-01 FOR ARCHITECTURAL SYMBOLS, NOTES AND ABBREVIATIONS.
2. REFER TO STRUCTURAL SHEETS FOR BRICK REPAIR ELEVATIONS, AND COLUMN REPAIRS.
3. REFER TO ELECTRICAL SHEETS FOR ELECTRICAL SCOPE.
4. REFER TO LIGHTING SHEETS FOR LIGHTING SCOPE.
5. REFER TO SPECIFICATION CODE 807.0350 MASONRY CLEANING, REPAIRING, AND REPOINTING FOR BRICK REPAIR AND CLEANING WORK.
6. REFER TO CIVIL AND STRUCTURAL SHEETS FOR COLUMN REPAIR, CONCRETE PAVEMENT AND SLAB WORK AND FOR CONNECTIONS OF ROOF DRAINAGE TO STREET DRAINING.
7. REFER TO SHEET A-06 FOR NEW BENCH WORK.
8. COAT TUNNEL WALL AND SIGNAGE IN ACCORDANCE WITH CODE 842 ANTI-GRAFFITI COATING.

GENERAL DEMOLITION NOTES:

1. PROVIDE PROTECTION FOR EXISTING CONDUIT PIPE AND OTHER EQUIPMENT REMAINING ON THE ROOF AND ALONG THE REAR BRICK WALL DURING REPAIR AND REPLACEMENT WORK.
2. REMOVE AND PROPERLY DISPOSE OF DEMOLISHED MATERIALS.
3. ALL AREAS EXPOSED DURING THE CONSTRUCTION PERIOD SHALL BE PROTECTED AND MADE WEATHER TIGHT THROUGHOUT THE CONSTRUCTION.
4. ALL ITEMS DESIGNATED FOR REMOVAL AND REUSE SHALL BE REMOVED WITH SPECIAL CARE TO PROTECT THE ITEM AS MUCH AS POSSIBLE AND STORE AS REQUIRED TO PREVENT ANY DAMAGE UNTIL IT IS REUSED/RETURNED. STORAGE LOCATION OF ITEMS SHALL BE COORDINATED WITH RIPTA.
5. REMOVE ALL PAINT FROM SHEET METAL AT THE SHELTER SOFFIT. EXISTING PAINT HAS LEAD CONTENT. CONTRACTOR SHALL BE RESPONSIBLE FOR REMOVAL OF PAINT FROM EXISTING ELEMENTS DESIGNATED TO REMAIN AND FOR LEGAL HANDLING AND DISPOSAL OF PAINTED ELEMENTS THAT ARE DESIGNATED FOR DEMOLITION AND REMOVED PAINT PRODUCT. PAINT REMOVAL SHALL BE DONE IN THE MOST GENTILE MEANS POSSIBLE TO ACHIEVE SATISFACTORY RESULTS, PER APPROVED HISTORIC REVIEW AND MOCKUP.
6. REMOVE ALL PAINT, CARBON STAINING, BIOLOGICAL GROWTH AND/OR EFLOURESCENT STAINING FROM MASONRY IN THE MOST GENTILE MEANS POSSIBLE TO ACHIEVE SATISFACTORY RESULTS, PER APPROVED HISTORIC REVIEW AND MOCKUP.
7. REMOVE DETERIORATED OR DAMAGED METAL TRIM AND PANELS IN THEIR ENTIRETY TO THE ADJACENT UNDAMAGED PANEL/TRIM. PROTECT ADJACENT ELEMENTS FROM DAMAGE.
8. DEMOLITION KEYNOTE NUMBERS SHOWN ON THE DRAWINGS IDENTIFY TYPICAL LOCATIONS AND ELEMENTS OF DEMOLITION WORK. THE CONTRACTOR IS RESPONSIBLE FOR ALL SIMILAR ITEMS, WHETHER OR NOT SPECIFICALLY IDENTIFIED. SIMILAR TO THE INTENT OF NOTE 12 ON SHEET A-01.

WSP USA INC.
100 SUMMER STREET, 13TH FLOOR
BOSTON, MA. 02110
166 VALLEY STREET, BUILDING 5,
PROVIDENCE, RI 02909
WWW.WSP.COM

RHODE ISLAND PUBLIC TRANSIT AUTHORITY

RHODE ISLAND
PUBLIC TRANSIT AUTHORITY

SCALE: 1/4"=1'-0"
2' 0 2' 4' 8'

REVISIONS			REVISIONS		
NO.	DATE	BY	NO.	DATE	BY

EAST SIDE TUNNEL REHABILITATION
PROVIDENCE RHODE ISLAND

OVERALL BUS SHELTER CEILING
DEMOLITION PLAN & PHOTOS

DESIGNED BY: GS
CHECKED BY: LCM
DATE: 06/30/2023
PLAN NO.: A-04
SHEET: 45 OF: 81

ARCH-DEM0003.dwg

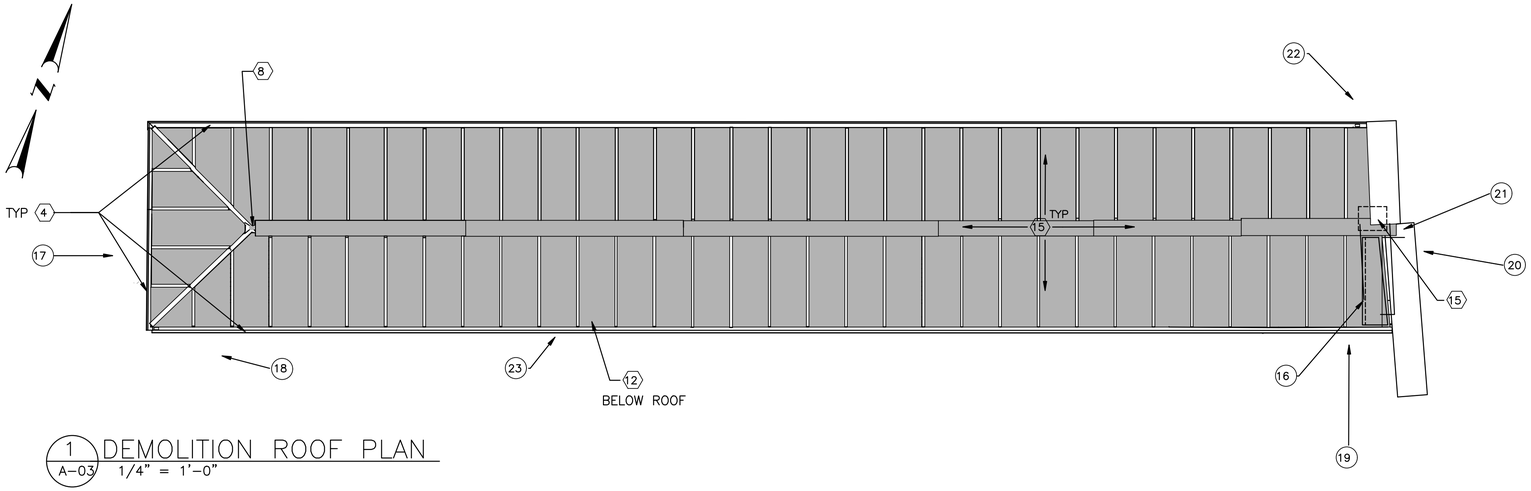

1 A-03 DEMOLITION ROOF PLAN
1/4" = 1'-0"

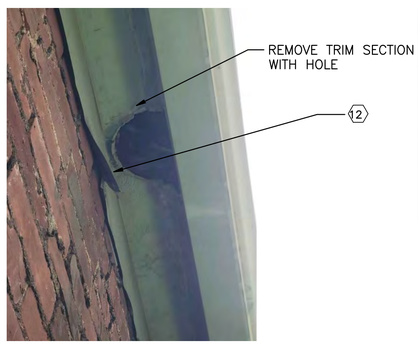

PHOTO 23: DAMAGED CLADDING AND REMOVED POST HOLE

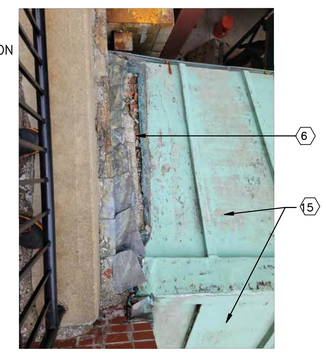

PHOTO 21: ROOF DEBRIS

PHOTO 19: ROOF FLASHING AT JOINT

PHOTO 17: EXISTING VISE ON TOP OF ROOF

PHOTO 16: EXISTING GUTTER AT SOUTHEAST CORNER

PHOTO 22: FLASHING AT BRICK WALL

PHOTO 20: AERIAL VIEW OF BUS SHELTER ROOF

PHOTO 18: EXISTING GUTTER

EXISTING CONDITIONS PHOTOS

DEMOLITION KEYNOTES:

1. REMOVE ENTIRE WALL TILE AND MORTAR FROM BRICK WALL. PROTECT BRICK FROM DAMAGE. CONTRACTOR TO PERFORM HAZARDOUS CONDITIONS INSPECTION ON TILE AND MORTAR TO CONFIRM MATERIALS ARE FREE OF ASBESTOS.
2. REMOVE EXISTING BENCH. REFER TO GENERAL NOTE 7.
3. REMOVE ALL EXISTING LIGHT FIXTURES. REFER TO ELECTRICAL SHEETS.
4. REMOVE EXISTING GUTTERS AND RAIN LEADERS ALL AROUND INCLUDING BRACKETS. BRACKET REMOVAL SHALL BE DONE WITHOUT DAMAGING THE EXISTING COPPER ROOF.
5. REMOVE TEMPORARY WOOD COLUMNS AND SHORING. REMOVE BROKEN COLUMN STUB. REFER TO STRUCTURAL SHEETS.
6. REMOVE DEBRIS FROM EXISTING ROOFING SYSTEM.
7. REMOVE DAMAGED WOODEN PLANKS AT CEILING OF BUS SHELTER. PROTECT CEILING WOOD PLANKS TO REMAIN FROM ADDITIONAL DAMAGE.
8. REMOVE EXISTING VISE ON TOP OF ROOF.

DEMOLITION KEYNOTES (cont'd):

9. REMOVE EXISTING BROKEN COLUMN CROWN AND ALL CERAMIC BEES NEST ART SCULPTURE FROM COLUMNS.
10. REMOVE EXISTING BROKEN,DAMAGED BRICKS.
11. PROTECT ELECTRICAL CONDUITS AND EQUIPMENT WHILE PERFORMING BRICK REPAIR.
12. REMOVE ALL DAMAGED COPPER CLADDING AND TRIM.
13. REMOVE ALL DAMAGED COPPER SOFFITS.
14. REMOVE ENTIRE DRAIN PIPE.
15. REMOVE PAINT FROM ROOF PANELS.
16. REMOVE DIRT AND DEBRIS FROM EXISTING FLASHING.
17. REMOVE PAINT FROM COPPER SOFFIT COFFERS, CLADDING AND TRIM.

GENERAL NOTES:

1. REFER TO SHEET A-01 FOR ARCHITECTURAL SYMBOLS, NOTES AND ABBREVIATIONS.
2. REFER TO STRUCTURAL SHEETS FOR BRICK REPAIR ELEVATIONS, AND COLUMN REPAIRS.
3. REFER TO ELECTRICAL SHEETS FOR ELECTRICAL SCOPE.
4. REFER TO LIGHTING SHEETS FOR LIGHTING SCOPE.
5. REFER TO SPECIFICATION CODE 807.0350 MASONRY CLEANING, REPAIRING, AND REPOINTING FOR BRICK REPAIR AND CLEANING WORK.
6. REFER TO CIVIL AND STRUCTURAL SHEETS FOR COLUMN REPAIR, CONCRETE PAVEMENT AND SLAB WORK AND FOR CONNECTIONS OF ROOF DRAINAGE TO STREET DRAINING.
7. REFER TO SHEET A-06 FOR NEW BENCH WORK.
8. COAT TUNNEL WALL AND SIGNAGE IN ACCORDANCE WITH CODE 842 ANTI-GRAFFITI COATING.

GENERAL DEMOLITION NOTES:

1. PROVIDE PROTECTION FOR EXISTING CONDUIT PIPE AND OTHER EQUIPMENT REMAINING ON THE ROOF AND ALONG THE REAR BRICK WALL DURING REPAIR AND REPLACEMENT WORK.
2. REMOVE AND PROPERLY DISPOSE OF DEMOLISHED MATERIALS.
3. ALL AREAS EXPOSED DURING THE CONSTRUCTION PERIOD SHALL BE PROTECTED AND MADE WEATHER TIGHT THROUGHOUT THE CONSTRUCTION.
4. ALL ITEMS DESIGNATED FOR REMOVAL AND REUSE SHALL BE REMOVED WITH SPECIAL CARE TO PROTECT THE ITEM AS MUCH AS POSSIBLE AND STORE AS REQUIRED TO PREVENT ANY DAMAGE UNTIL IT IS REUSED/RETURNED. STORAGE LOCATION OF ITEMS SHALL BE COORDINATED WITH RIPTA.
5. REMOVE ALL PAINT FROM SHEET METAL AT THE SHELTER SOFFIT. EXISTING PAINT HAS LEAD CONTENT. CONTRACTOR SHALL BE RESPONSIBLE FOR REMOVAL OF PAINT FROM EXISTING ELEMENTS DESIGNATED TO REMAIN AND FOR LEGAL HANDLING AND DISPOSAL OF PAINTED ELEMENTS THAT ARE DESIGNATED FOR DEMOLITION AND REMOVED PAINT PRODUCT. PAINT REMOVAL SHALL BE DONE IN THE MOST GENTILE MEANS POSSIBLE TO ACHIEVE SATISFACTORY RESULTS, PER APPROVED HISTORIC REVIEW AND MOCKUP.
6. REMOVE ALL PAINT, CARBON STAINING, BIOLOGICAL GROWTH AND/OR EFFLORESCENT STAINING FROM MASONRY IN THE MOST GENTILE MEANS POSSIBLE ACHIEVE SATISFACTORY RESULTS, PER APPROVED HISTORIC REVIEW AND MOCKUP.
7. REMOVE DETERIORATED OR DAMAGED METAL TRIM AND PANELS IN THEIR ENTIRETY TO THE ADJACENT UNDAMAGED PANEL/TRIM. PROTECT ADJACENT ELEMENTS FROM DAMAGE.
8. DEMOLITION KEYNOTE NUMBERS SHOWN ON THE DRAWINGS IDENTIFY TYPICAL LOCATIONS AND ELEMENTS OF DEMOLITION WORK. THE CONTRACTOR RESPONSIBLE FOR ALL SIMILAR ITEMS, WHETHER OR NOT SPECIFICALLY IDENTIFIED. SIMILAR TO THE INTENT OF NOTE 12 ON SHEET A-01.

WSP USA INC.
100 SUMMER STREET, 13TH FLOOR
BOSTON, MA. 02110
166 VALLEY STREET, BUILDING 5,
PROVIDENCE, RI 02909
WWW.WSP.COM

RHODE ISLAND PUBLIC TRANSIT AUTHORITY

RHODE ISLAND
PUBLIC TRANSIT AUTHORITY

SCALE: 1/4"=1'-0"
2' 0 2' 4' 8'

REVISIONS			REVISIONS		
NO.	DATE	BY	NO.	DATE	BY

EAST SIDE TUNNEL REHABILITATION
PROVIDENCE RHODE ISLAND

OVERALL BUS SHELTER ROOF
DEMOLITION PLAN & PHOTOS

DESIGNED BY: GS
CHECKED BY: LCM
DATE: 06/30/2023
PLAN NO.: A-05
SHEET: 46 OF: 81

ARCH-DEMO004.dwg

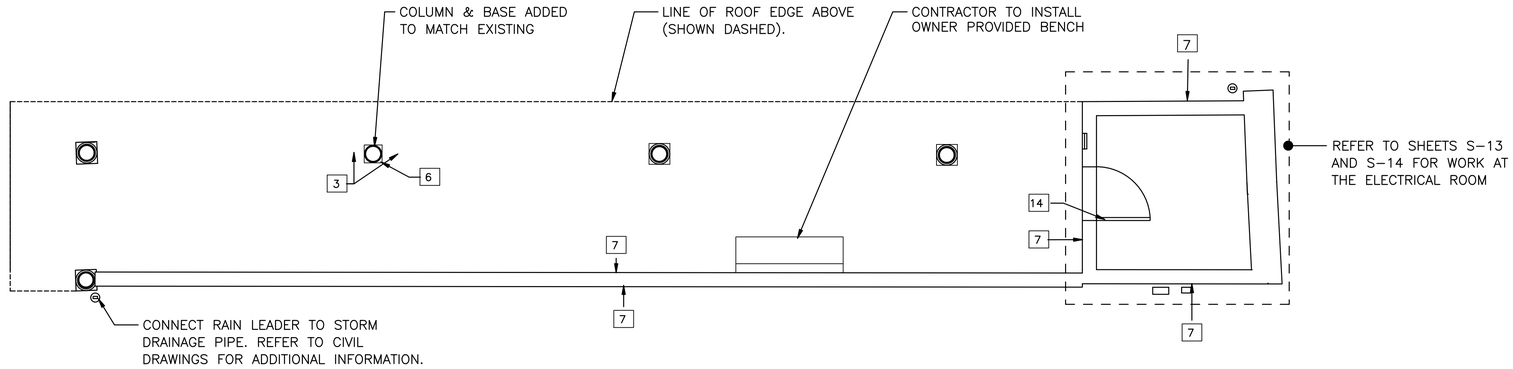

1 BUS SHELTER NEW WORK FLOOR PLAN
1/4" = 1'-0"

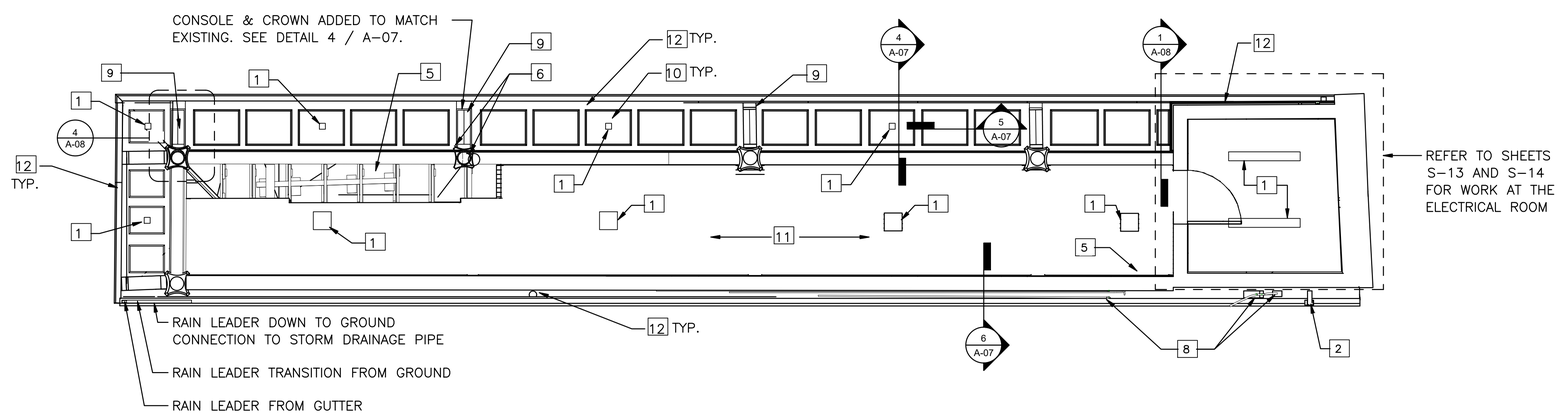

2 BUS SHELTER NEW WORK CEILING PLAN
1/4" = 1'-0"

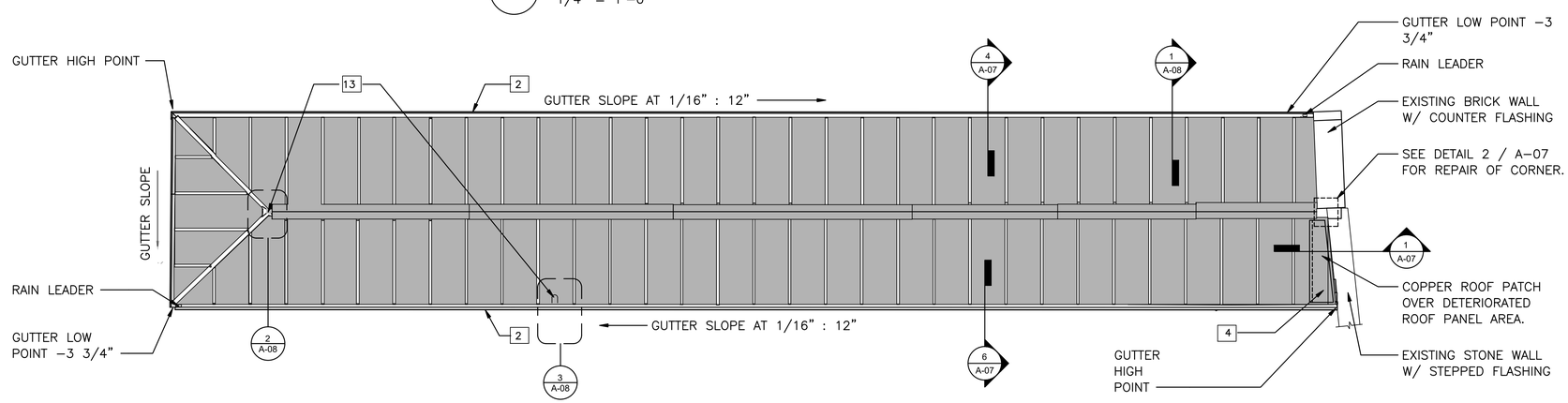

3 A-03 BUS SHELTER NEW WORK ROOF PLAN
1/4" = 1'-0"

GENERAL NOTES:

1. REFER TO SHEET A-01 FOR ARCHITECTURAL SYMBOLS, NOTES AND ABBREVIATIONS.
2. REFER TO STRUCTURAL SHEETS FOR BRICK REPAIR ELEVATIONS, AND COLUMN REPAIRS.
3. REFER TO ELECTRICAL SHEETS FOR ELECTRICAL SCOPE.
4. REFER TO LIGHTING SHEETS FOR LIGHTING SCOPE.
5. REFER TO SPECIFICATION CODE 807.0350 MASONRY CLEANING, REPAIRING, AND REPOINTING FOR BRICK REPAIR AND CLEANING WORK.
6. REFER TO CIVIL AND STRUCTURAL SHEETS FOR COLUMN REPAIR, CONCRETE PAVEMENT AND SLAB WORK AND FOR CONNECTIONS OF ROOF DRAINAGE TO STREET DRAINING.

GENERAL NEW WORK NOTES:

1. BRICK REPAIR/REPLACEMENT, SHEET METAL PANELS, TRIM, CLADDING AND GUTTER AND PAINTING RELATED WORK SHALL BE IN ACCORDANCE WITH CONTRACT DOCUMENTS, APPROVED MATERIALS AND METHODS THAT SATISFY HISTORIC RESTORATION REQUIREMENTS AND STANDARDS (REFER TO NHPA PUBLICATION "STANDARDS FOR THE TREATMENT OF HISTORIC PROPERTIES" AND AS ESTABLISHED BY THE APPROVED MOCKUPS.

NEW WORK KEYNOTES: ←

1. INSTALL NEW LIGHT FIXTURES. REFER TO ELECTRICAL AND LIGHTING SHEETS.
2. INSTALL NEW GUTTERS ALL AROUND. GUTTER SLOPE TO DRAIN SHALL NOT BE LESS THAN INDICATED OR NEEDED.
3. INSTALL COLUMN AND REPAIR CONCRETE AT BASE OF REPLACED COLUMN. REFER TO STRUCTURAL SHEETS.
4. INSTALL NEW COPPER ROOF PATCH, INCLUDING ALL UNDERLAYMENTS, INSULATION, ADHESIVES AND FLASHINGS. CLEAN ROOF DEBRIS AFTER INSTALLATION.
5. INSTALL WOOD CEILING PLANKS WHERE MISSING UNDERNEATH BUS SHELTER. NEW PLANKS TO RECEIVE TRANSPARENT FINISH (MATCH EXISTING).
6. INSTALL NEW COLUMN CROWN TO COLUMN.
7. REPLACE BROKEN, DAMAGED BRICKS.
8. PROTECT EXISTING CONDUITS AND SUPPORTS.
9. INSTALL COPPER CONSOLES.
10. INSTALL COPPER SOFFITS.
11. SAND AND REFINISH ENTIRE WOOD CEILING WITH TRANSPARENT FINISH.
12. INSTALL REPLACEMENT METAL TRIM AND PANELS IN THEIR ENTIRETY TO THE ADJACENT UNDAMAGED EXISTING PANEL/TRIM. PROTECT ADJACENT ELEMENTS FROM DAMAGE.
13. INSTALL COPPER CAP OVER EXISTING ROOF FINIAL CAP AND OVER POST HOLE.
14. INSTALL NEW DOOR AND FRAME

WSP USA INC.
100 SUMMER STREET, 13TH FLOOR
BOSTON, MA. 02110
166 VALLEY STREET, BUILDING 5,
PROVIDENCE, RI 02909
WWW.WSP.COM

RHODE ISLAND PUBLIC TRANSIT AUTHORITY

RHODE ISLAND
PUBLIC TRANSIT AUTHORITY

SCALE: 1/4"=1'-0"
2' 0 2' 4' 8'

REVISIONS			REVISIONS		
NO.	DATE	BY	NO.	DATE	BY

EAST SIDE TUNNEL REHABILITATION
PROVIDENCE RHODE ISLAND

OVERALL BUS SHELTER FLOOR NEW WORK FLOOR CEILING AND ROOF PLANS

DESIGNED BY: GS
CHECKED BY: LCM
DATE: 06/30/2023
PLAN NO.: A-06
SHEET: 47 OF: 81

ARCH-SHED001.dwg

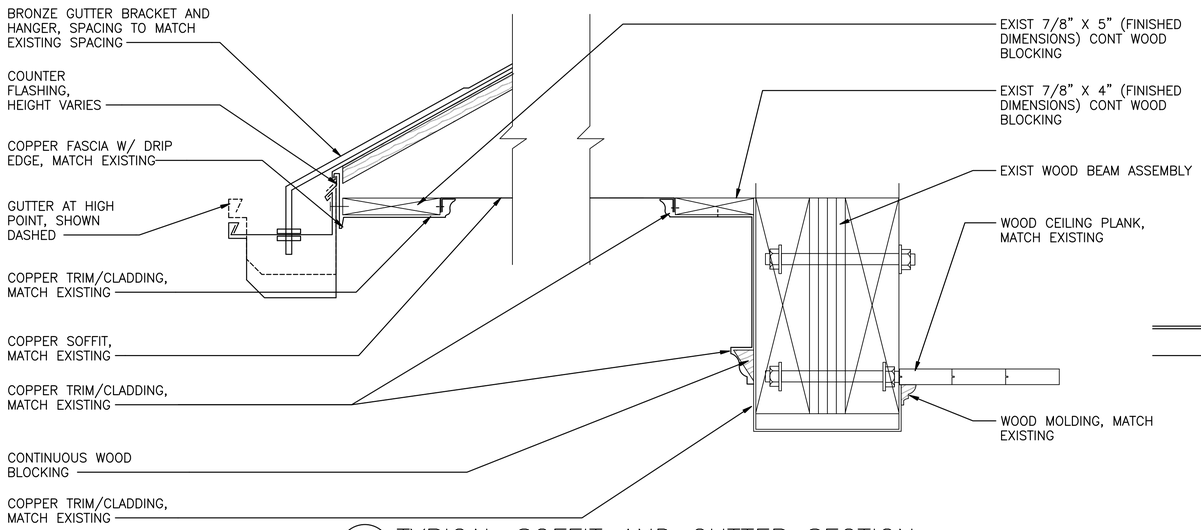

4 A-06 TYPICAL SOFFIT AND GUTTER SECTION
3" = 1'-0"

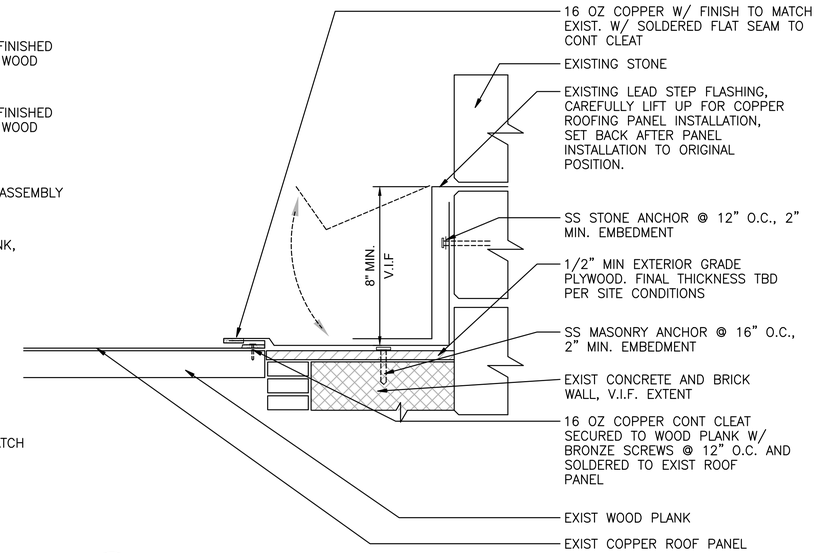

1 A-06 COPPER CLEAT AT WOOD PLANK
3" = 1'-0"

GENERAL NOTES:

1. REFER TO SHEET A-01 FOR ARCHITECTURAL SYMBOLS, NOTES AND ABBREVIATIONS.
2. REFER TO STRUCTURAL SHEETS FOR BRICK REPAIR ELEVATIONS, AND COLUMN REPAIRS.
3. REFER TO ELECTRICAL SHEETS FOR ELECTRICAL SCOPE.
4. REFER TO LIGHTING SHEETS FOR LIGHTING SCOPE.
5. REFER TO SPECIFICATION CODE 807.0350 MASONRY CLEANING, REPAIRING, AND REPOINTING FOR BRICK REPAIR AND CLEANING WORK.
6. REFER TO CIVIL AND STRUCTURAL SHEETS FOR COLUMN REPAIR, CONCRETE PAVEMENT AND SLAB WORK AND FOR CONNECTIONS OF ROOF DRAINAGE TO STREET DRAINING.

GENERAL NEW WORK NOTES:

1. BRICK REPAIR/REPLACEMENT, SHEET METAL PANELS, TRIM, CLADDING AND GUTTER AND PAINTING RELATED WORK SHALL BE IN ACCORDANCE WITH CONTRACT DOCUMENTS, APPROVED MATERIALS AND METHODS THAT SATISFY HISTORIC RESTORATION REQUIREMENTS AND STANDARDS (REFER TO NHPA PUBLICATION "STANDARDS FOR THE TREATMENT OF HISTORIC PROPERTIES" AND AS ESTABLISHED BY THE APPROVED MOCKUPS.

DETAILS NOTES:

1. DETAILS SHOWN ARE BASED ON FIELD OBSERVATION, PHOTOS AND LIMITED INFORMATION SHOWN ON THE ORIGINAL CONSTRUCTION DRAWINGS DATED 12/29/2014.
2. CONTRACTOR IS RESPONSIBLE FOR FURTHER FIELD INVESTIGATION AND FOR PROVIDING SHOP DRAWINGS WITH FINAL DETAILS MEETING THE INTENT SHOWN AND THE ACTUAL BUILD OF THE HISTORIC STRUCTURE FOR REVIEW BY THE ARCHITECT.
3. ALL FACE ANCHORS SHALL BE CORROSION RESISTANT. EXPOSED TO VIEW ANCHORS SHALL BE BRONZE OR COPPER WITH STRENGTH AS REQUIRED FOR EACH SPECIFIC APPLICATION.
4. SOLDERING SHALL BE WITH MINIMAL VISUAL EXPOSURE POSSIBLE.
5. NEW COPPER SHEET SHALL HAVE THE SAME FINISH AS THE ORIGINAL COPPER ONCE LEANED FROM ALL PAINT AND RESIDUE.

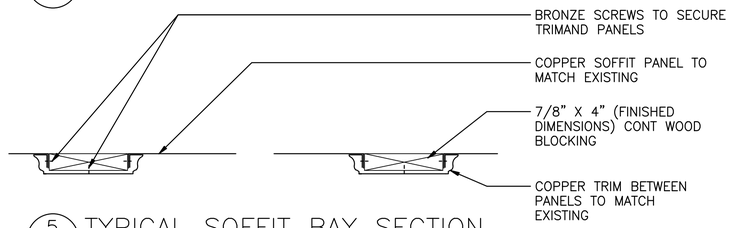

5 A-06 TYPICAL SOFFIT BAY SECTION
3" = 1'-0"

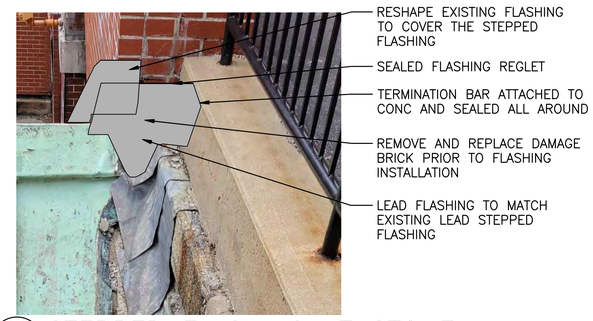

2 STEPPED FLASHING AT STONE WALL
N.T.S.

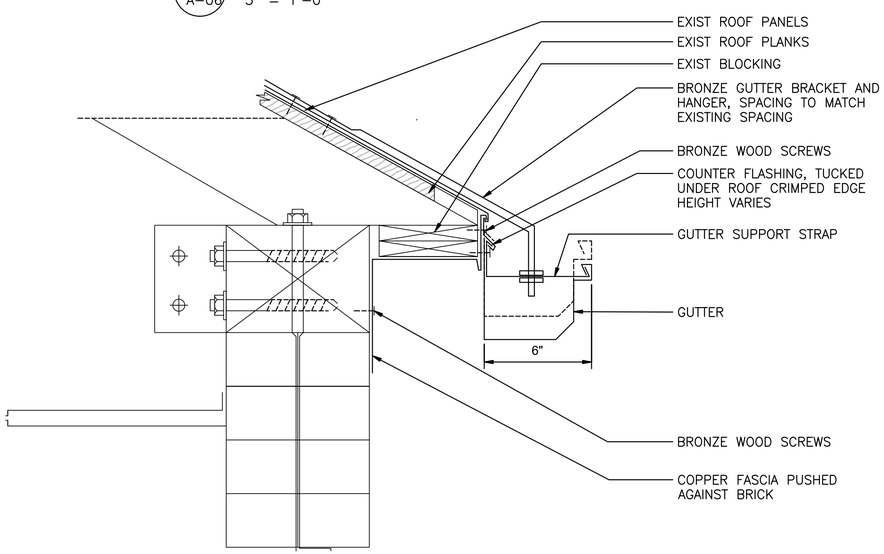

6 A-06 TYPICAL SOFFIT AND GUTTER SECTION
3" = 1'-0"

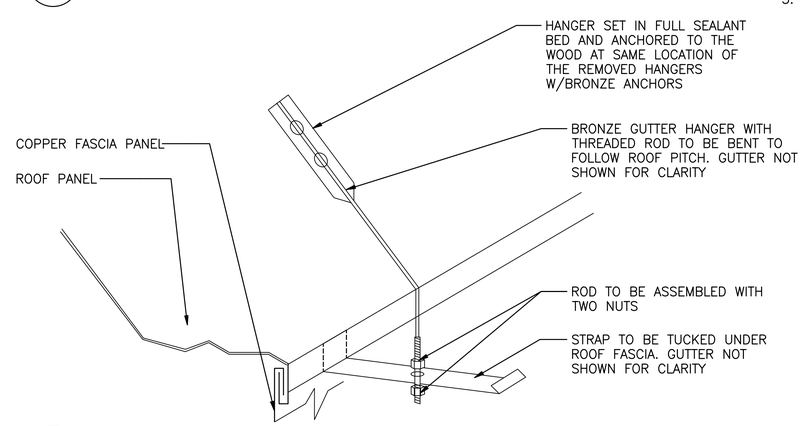

3 GUTTER HANGER WITH STRAP
3" = 1'-0"

WSP USA INC.
100 SUMMER STREET, 13TH FLOOR
BOSTON, MA. 02110
166 VALLEY STREET, BUILDING 5,
PROVIDENCE, RI 02909
WWW.WSP.COM

RHODE ISLAND PUBLIC TRANSIT AUTHORITY

SCALE: 3"=1'-0"
1 1/2" 0 1 1/2" 3" 6"

REVISIONS			REVISIONS		
NO.	DATE	BY	NO.	DATE	BY

EAST SIDE TUNNEL REHABILITATION
PROVIDENCE RHODE ISLAND
ROOF AND CEILING DETAILS

DESIGNED BY: GS
CHECKED BY: LCM
DATE: 06/30/2023
PLAN NO.: A-07
SHEET: 48 OF: 81

ARCH-ROOF001.dwg

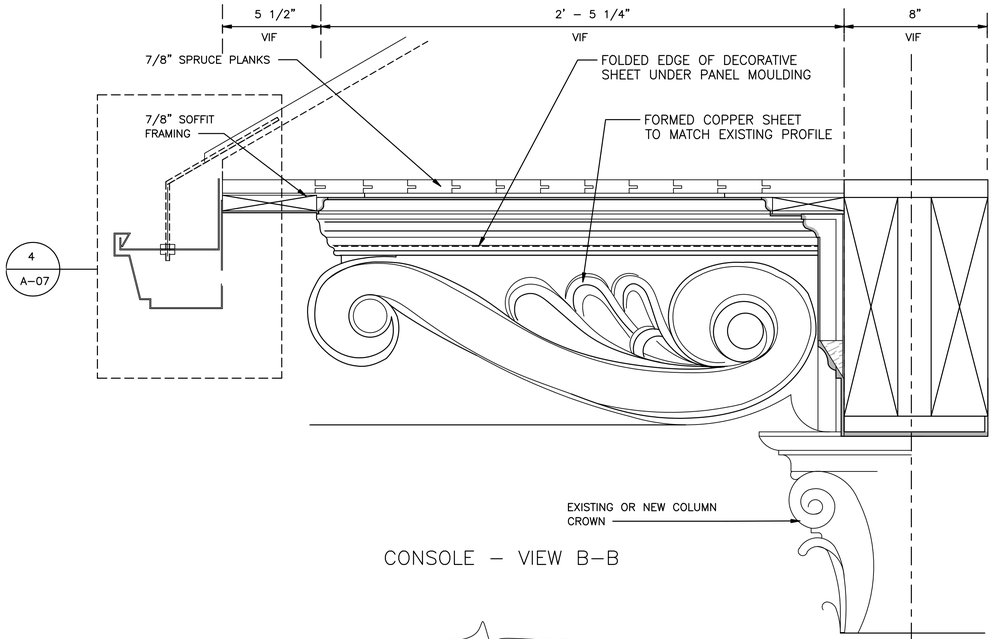

CONSOLE – VIEW B–B

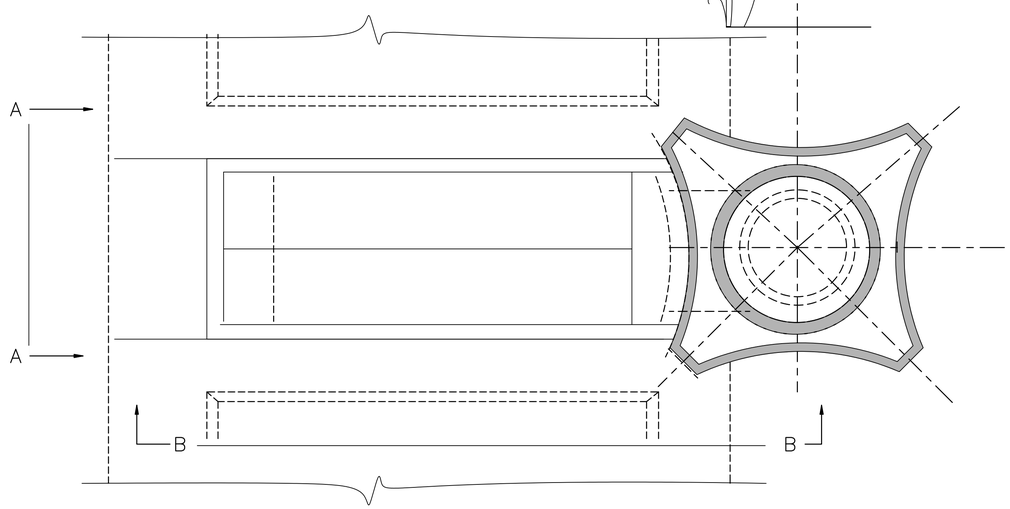

CONSOLE – PLAN VIEW

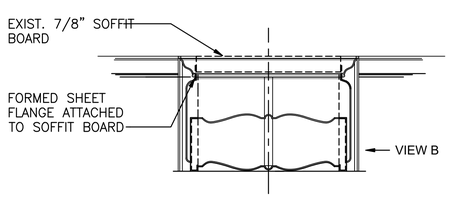

FRONT PIECE – VIEW A–A

4 A–06 CONSOLE DETAIL
3" = 1'–0"

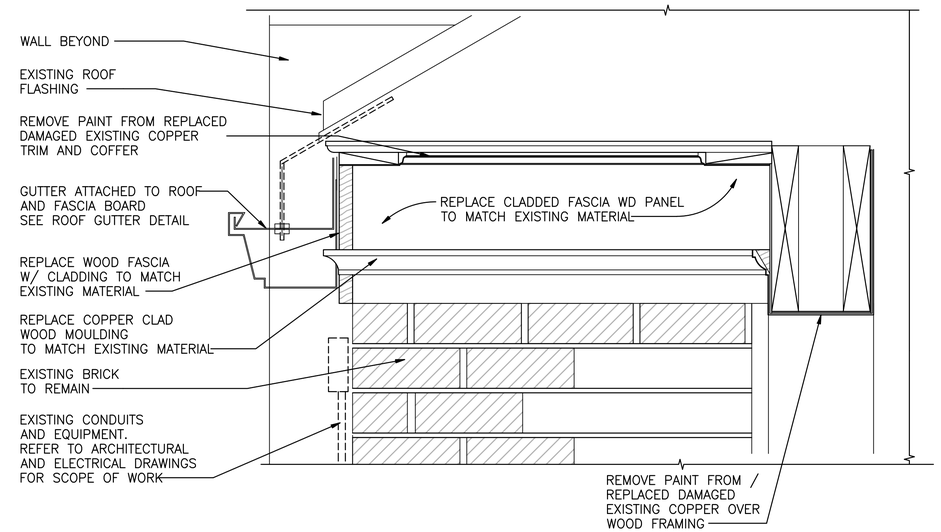

1 A–06 ELECTRICAL ROOM – FASCIA DETAIL
3" = 1'–0"

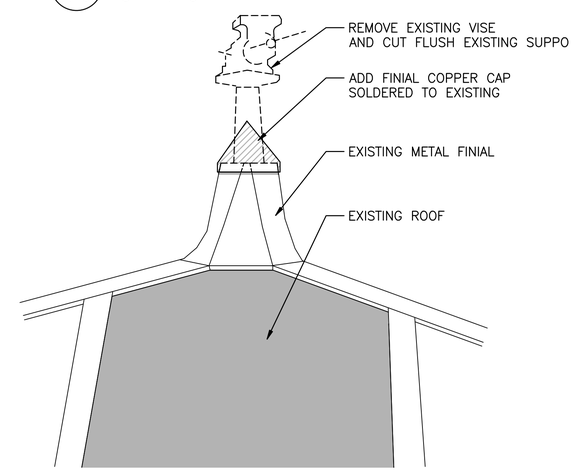

2 FINIAL DETAIL
3" = 1'–0"

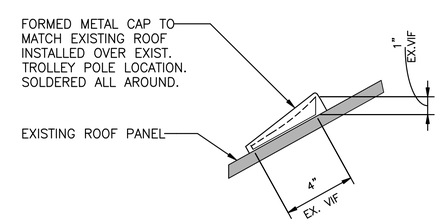

3 A–06 CAP DETAIL
3" = 1'–0"

NOTES:

1. REFER TO STRUCTURAL SHEET S–25 FOR COLUMN INFORMATION, DIMENSIONS AND DETAILS.
2. EXISTING COLUMN CROWN ARE MULTI–PART ELEMENTS SCREWED TO THE COLUMN. CONTRACTOR SHALL FABRICATE AND ATTACH THE CROWN PIECES TO THE NEW COLUMN AS CLOSE AS POSSIBLE TO THE ORIGINAL CROWN.
3. CONTRACTOR MAY OBTAIN FROM THE ENGINEER THE SCANNED MESH STL FILES OF THE CROWN AND CONSOLE TO HELP CREATE THE NEW REPLICATED ITEMS. CONSTRUCTOR SHALL VERIFY THE FILE ACCURACY PRIOR TO FABRICATION.

DETAIL NOTES:

1. DETAILS SHOWN ARE BASED ON FIELD OBSERVATION, PHOTOS AND LIMITED INFORMATION SHOWN ON THE ORIGINAL CONSTRUCTION DRAWINGS DATED 12/29/2014.
2. CONTRACTOR IS RESPONSIBLE FOR FURTHER FIELD INVESTIGATION AND FOR PROVIDING SHOP DRAWINGS WITH FINAL DETAILS MEETING THE INTENT SHOWN AND THE ACTUAL BUILT OF THE HISTORIC STRUCTURE FOR REVIEW BY THE ARCHITECT.
3. ALL FACE ANCHORS SHALL BE OF CORROSION RESISTANCE. EXPOSED TO VIEW ANCHORS SHALL BE BRONZE OR COPPER WITH STRENGTH AS REQUIRED FOR EACH SPECIFIC APPLICATION.
4. SOLDERING SHALL BE WITH MINIMAL VISUAL EXPOSURE POSSIBLE.
5. NEW COPPER SHEET SHALL HAVE THE SAME FINISH AS THE ORIGINAL COPPER ONCE CLEANED FROM ALL PAINT AND RESIDUE.

WSP USA INC.
100 SUMMER STREET, 13TH FLOOR
BOSTON, MA. 02110
166 VALLEY STREET, BUILDING 5,
PROVIDENCE, RI 02909
WWW.WSP.COM

RHODE ISLAND PUBLIC TRANSIT AUTHORITY

RHODE ISLAND
PUBLIC TRANSIT AUTHORITY

SCALE: 3"=1'–0"
1 1/2" 0 1 1/2" 3" 6"

REVISIONS			REVISIONS		
NO.	DATE	BY	NO.	DATE	BY

EAST SIDE TUNNEL REHABILITATION
PROVIDENCE RHODE ISLAND

CEILING DETAILS

DESIGNED BY: GS
CHECKED BY: LCM
DATE: 06/30/2023
PLAN NO.: A–08
SHEET: 49 OF: 81

ARCH–MISCDETL001.dwg

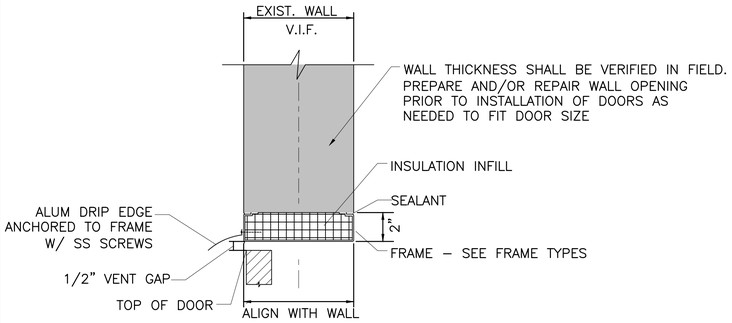

HEAD DETAIL – H1

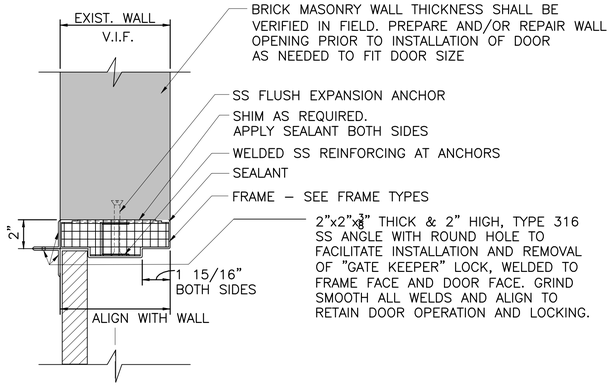

JAMB DETAIL – J1

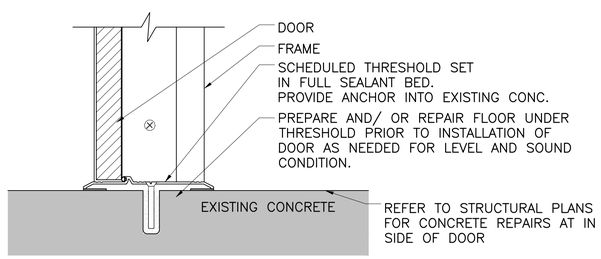

SILL DETAIL – S1

HEAD, JAMB, SILL DETAILS
3"=1'–0"

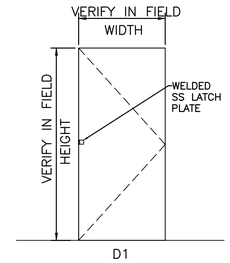

D1

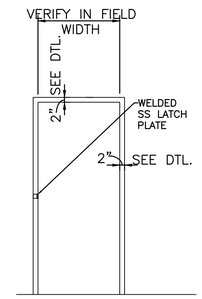

F1

DOOR & FRAME TYPES
N.T.S.

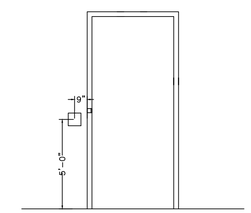

BRAILLE SIGN MOUNTING DIAGRAM
N.T.S.

NOTE:
BRAILLE SIGNS SHALL BE MOUNTED ALONGSIDE THE DOOR ON THE LATCH SIDE WALL AT SINGLE DOOR. IF THERE IS NO WALL SPACE AT THE LATCH SIDE OF THE DOOR, SIGNS SHALL BE LOCATED AT THE NEAREST WALL.

GENERAL NOTES:

1. FIELD VERIFY ALL DIMENSIONS PRIOR TO FABRICATION OF DOORS AND FRAMES.
2. REMOVE ENTIRE DOOR FRAME, DOORS AND THRESHOLD INCLUDING ANY ASSOCIATED HARDWARE FROM THE OPENING.
3. PREPARE DOOR OPENING SMOOTH. PATCH ANY HOLES AND APPLY UNIFORM SKIM COAT IN THE ENTIRE AREA OF THE DOORWAY. CHIP AWAY ANY BRICK SO NEW JAMB WILL FIT SNUG.
4. PROVIDE CONCRETE INFILL WHERE NEEDED IN LOCATIONS WHERE EXISTING DOOR ROUGH OPENING IS LARGER THAN REQUIRED FOR THE NEW DOOR FRAME.
5. ALL DOORS TO BE INSULATED 1 3/4" THICK UNLESS NOTED OTHERWISE.
6. REFER TO SPECIFICATION CODE 824.9901 FOR DOOR AND HARDWARE.
7. REFER TO SPECIFICATION CODE T15 FOR BRAILLE SIGN MATERIALS AND ADDITIONAL SIGN GUIDANCE.
8. REFER TO FIRE PROTECTION DRAWINGS FOR DTE SIGN LOCATIONS.
9. REFER TO SIGNING PLAN FOR ADDITIONAL INFORMATION.

PANTONE COLOR TABLE

BLACK 419 C
WHITE 000 C
RED 187 C
GREEN 3425 C

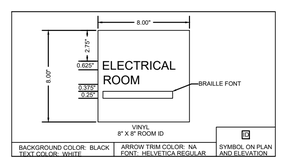

SIGN TYPE A–2
N.T.S.

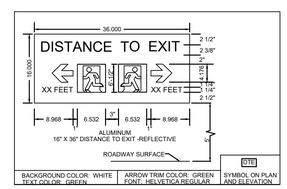

SIGN TYPE A–8
N.T.S.

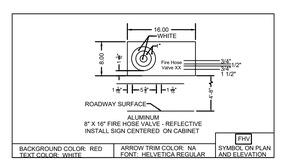

SIGN TYPE A–7
N.T.S.

DTE SIGN STATION TABLE

NORTHBOUND / SOUTHBOUND						
SIGN ID	SIGN LOCATION +/–	DIST. BTWN SIGNS +/–	SIGN ID	SIGN LOCATION +/–	DIST. BTWN SIGNS +/–	SIGH TYPE
WEST PORTAL			WEST PORTAL			
NB–01	19+31					DET–REF
NB–02	18+51	82'–0"	SB–01	18+51		DET–REF
NB–03	17+69	82'–0"	SB–02	17+69	82'–0"	DET–REF
NB–04	16+87	82'–0"	SB–03	16+87	82'–0"	DET–REF
NB–05	16+05	82'–0"	SB–04	16+05	82'–0"	DET–REF
NB–06	15+23	82'–0"	SB–05	15+23	82'–0"	DET–REF
NB–07	14+41	82'–0"	SB–06	14+41	82'–0"	DET–REF
NB–08	13+59	82'–0"	SB–07	13+59	82'–0"	DET–REF
NB–09	12+77	82'–0"	SB–08	12+77	82'–0"	DET–REF
NB–10	11+95	82'–0"	SB–09	11+95	82'–0"	DET–REF
NB–11	11+13	82'–0"	SB–10	11+13	82'–0"	DET–REF
NB–12	10+31	82'–0"	SB–11	10+31	82'–0"	DET–REF
NB–13	9+49	82'–0"	SB–12	9+49	82'–0"	DET–REF
NB–14	8+67	82'–0"	SB–13	8+67	82'–0"	DET–REF
NB–15	7+85	82'–0"	SB–14	7+85	82'–0"	DET–REF
NB–16	7+03	82'–0"	SB–15	7+03	82'–0"	DET–REF
NB–17	6+21	82'–0"	SB–16	6+21	82'–0"	DET–REF
NB–18	5+39	82'–0"	SB–17	5+39	82'–0"	DET–REF
NB–19	4+57	82'–0"	SB–18	4+57	82'–0"	DET–REF
NB–20	3+75	82'–0"	SB–19	3+75	82'–0"	DET–REF
NB–21	2+93	82'–0"	SB–20	2+93	82'–0"	DET–REF
EAST PORTAL			EAST PORTAL			

WSP USA INC.
100 SUMMER STREET, 13TH FLOOR
BOSTON, MA. 02110
166 VALLEY STREET, BUILDING 5,
PROVIDENCE, RI 02909
WWW.WSP.COM

RHODE ISLAND PUBLIC TRANSIT AUTHORITY

RHODE ISLAND
PUBLIC TRANSIT AUTHORITY

SCALE: NOT TO SCALE

REVISIONS			REVISIONS		
NO.	DATE	BY	NO.	DATE	BY

EAST SIDE TUNNEL REHABILITATION

PROVIDENCE RHODE ISLAND

DOOR DETAILS, SIGNAGE

DESIGNED BY: GS
CHECKED BY: LCM
DATE: 06/30/2023
PLAN NO.: A–09
SHEET: 50 OF: 81

ARCH–DETL001.dwg

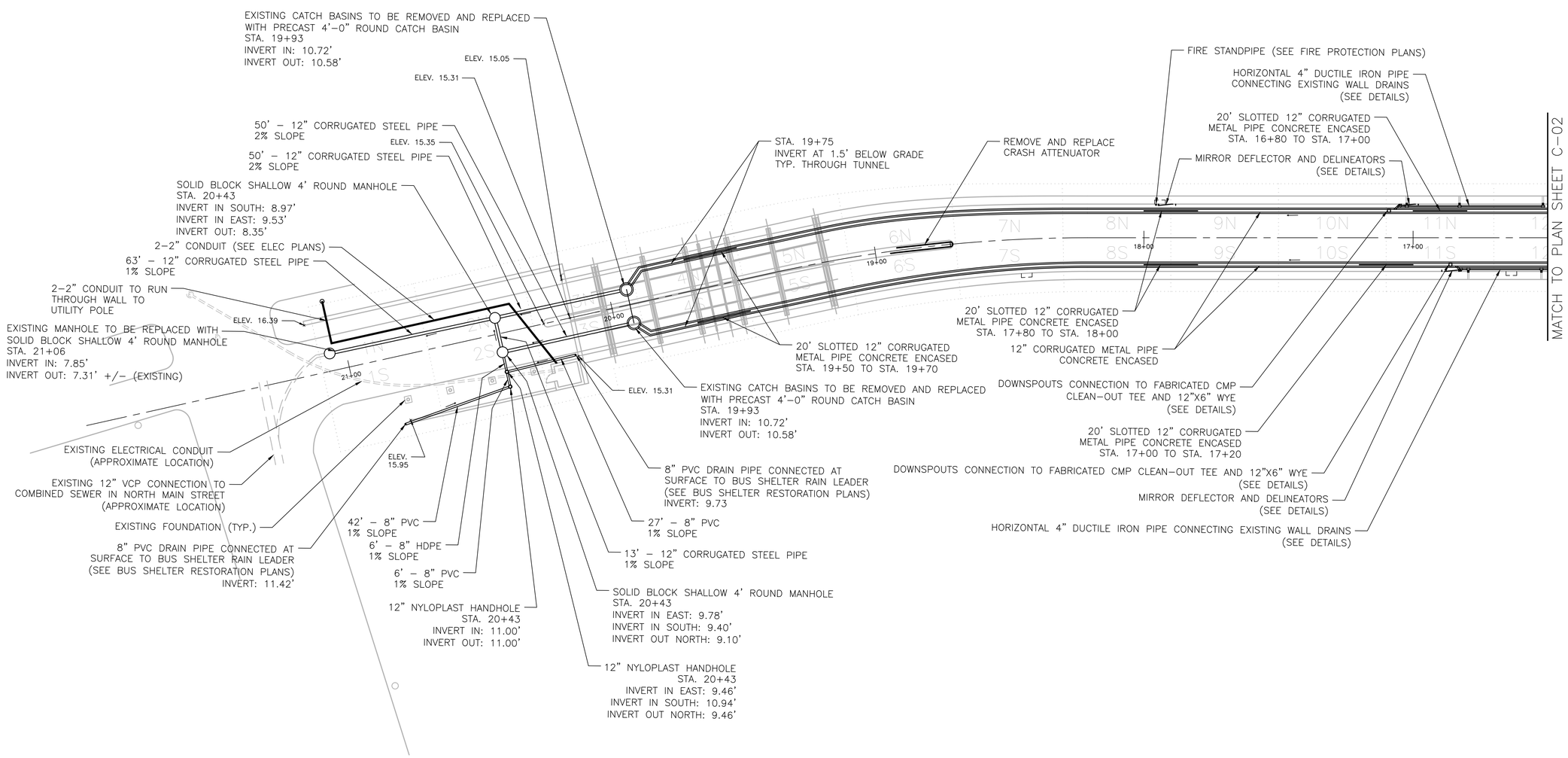

WSP USA INC.

100 SUMMER STREET, 13TH FLOOR
BOSTON, MA. 02110

166 VALLEY STREET, BUILDING 5,
PROVIDENCE, RI 02909

WWW.WSP.COM

RHODE ISLAND PUBLIC TRANSIT AUTHORITY

RHODE ISLAND
PUBLIC TRANSIT AUTHORITY

SCALE: 1"=20'

GRAPHIC SCALE

REVISIONS			REVISIONS		
NO.	DATE	BY	NO.	DATE	BY

EAST SIDE TUNNEL REHABILITATION

PROVIDENCE RHODE ISLAND

DRAINAGE PLAN 1

DESIGNED BY: AP
CHECKED BY: RP
DATE: 06/30/2023
PLAN NO.: C–01
SHEET: 51 OF: 81

TDRAINUTIL001.dwg

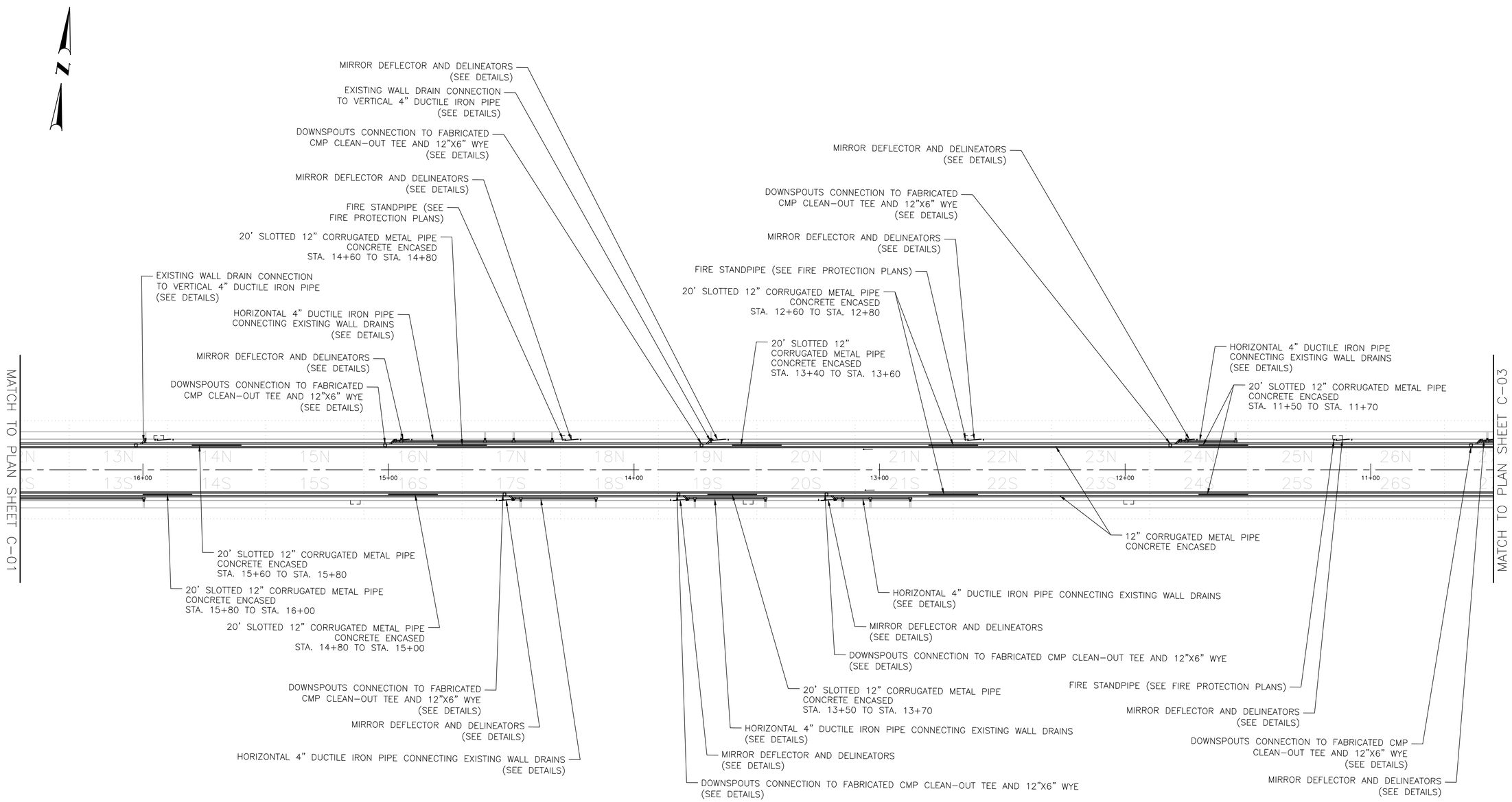

WSP USA INC.

100 SUMMER STREET, 13TH FLOOR
BOSTON, MA. 02110

166 VALLEY STREET, BUILDING 5,
PROVIDENCE, RI 02909

WWW.WSP.COM

RHODE ISLAND PUBLIC TRANSIT AUTHORITY

RHODE ISLAND
PUBLIC TRANSIT AUTHORITY

SCALE: 1"=20'

GRAPHIC SCALE

REVISIONS			REVISIONS		
NO.	DATE	BY	NO.	DATE	BY

EAST SIDE TUNNEL REHABILITATION

PROVIDENCE RHODE ISLAND

DRAINAGE PLAN 2

DESIGNED BY: AP
CHECKED BY: RP
DATE: 06/30/2023
PLAN NO.: C-02
SHEET: 52 OF: 81

TDRAINUTIL002.dwg

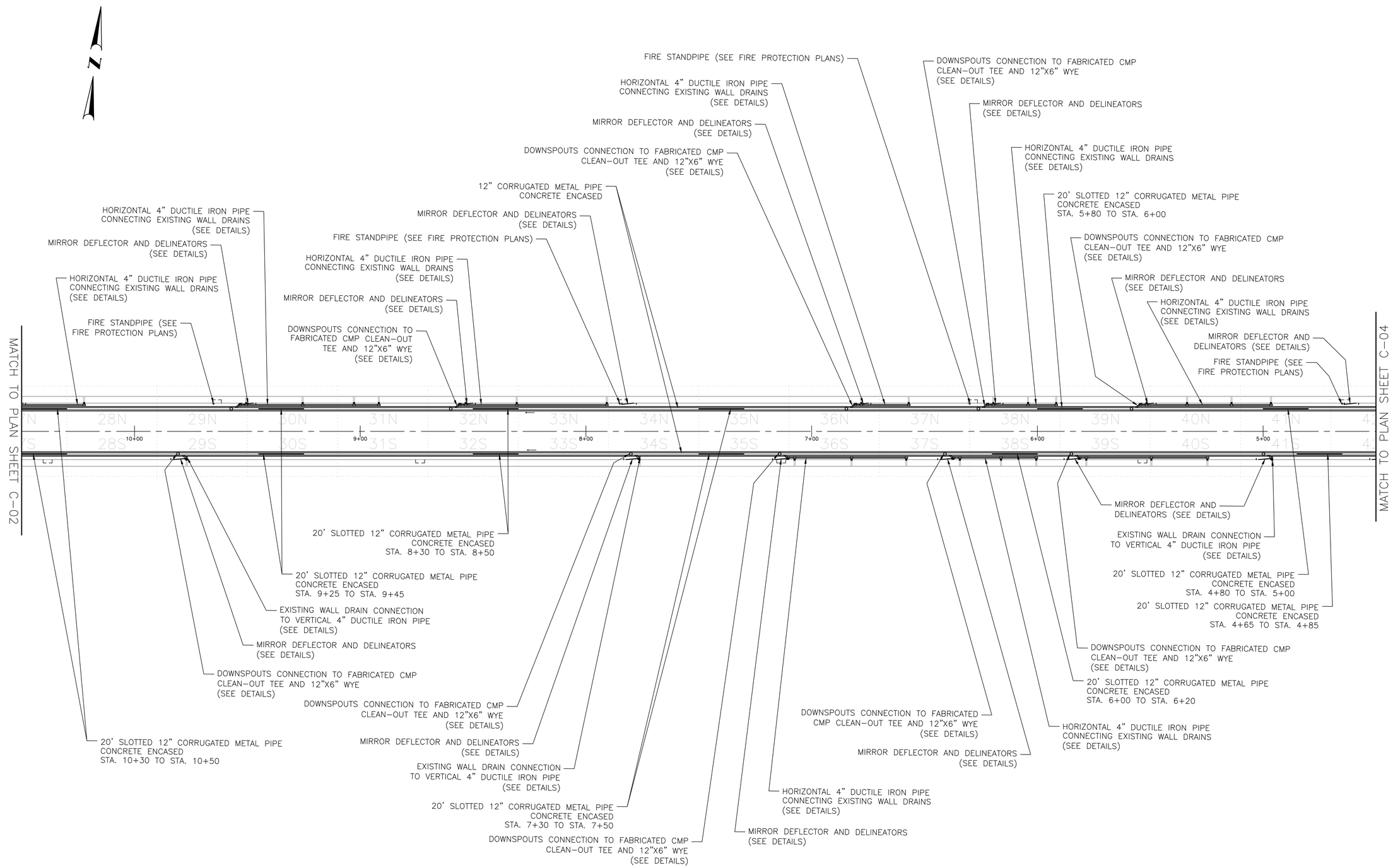

WSP USA INC.

100 SUMMER STREET, 13TH FLOOR
BOSTON, MA. 02110

166 VALLEY STREET, BUILDING 5,
PROVIDENCE, RI 02909

WWW.WSP.COM

RHODE ISLAND PUBLIC TRANSIT AUTHORITY

RHODE ISLAND
PUBLIC TRANSIT AUTHORITY

SCALE: 1"=20'

GRAPHIC SCALE

REVISIONS			REVISIONS		
NO.	DATE	BY	NO.	DATE	BY

EAST SIDE TUNNEL REHABILITATION

PROVIDENCE RHODE ISLAND

DRAINAGE PLAN 3

DESIGNED BY: AP
CHECKED BY: RP
DATE: 06/30/2023
PLAN NO.: C-03
SHEET: 53 OF: 81

TDRAINUTIL003.dwg

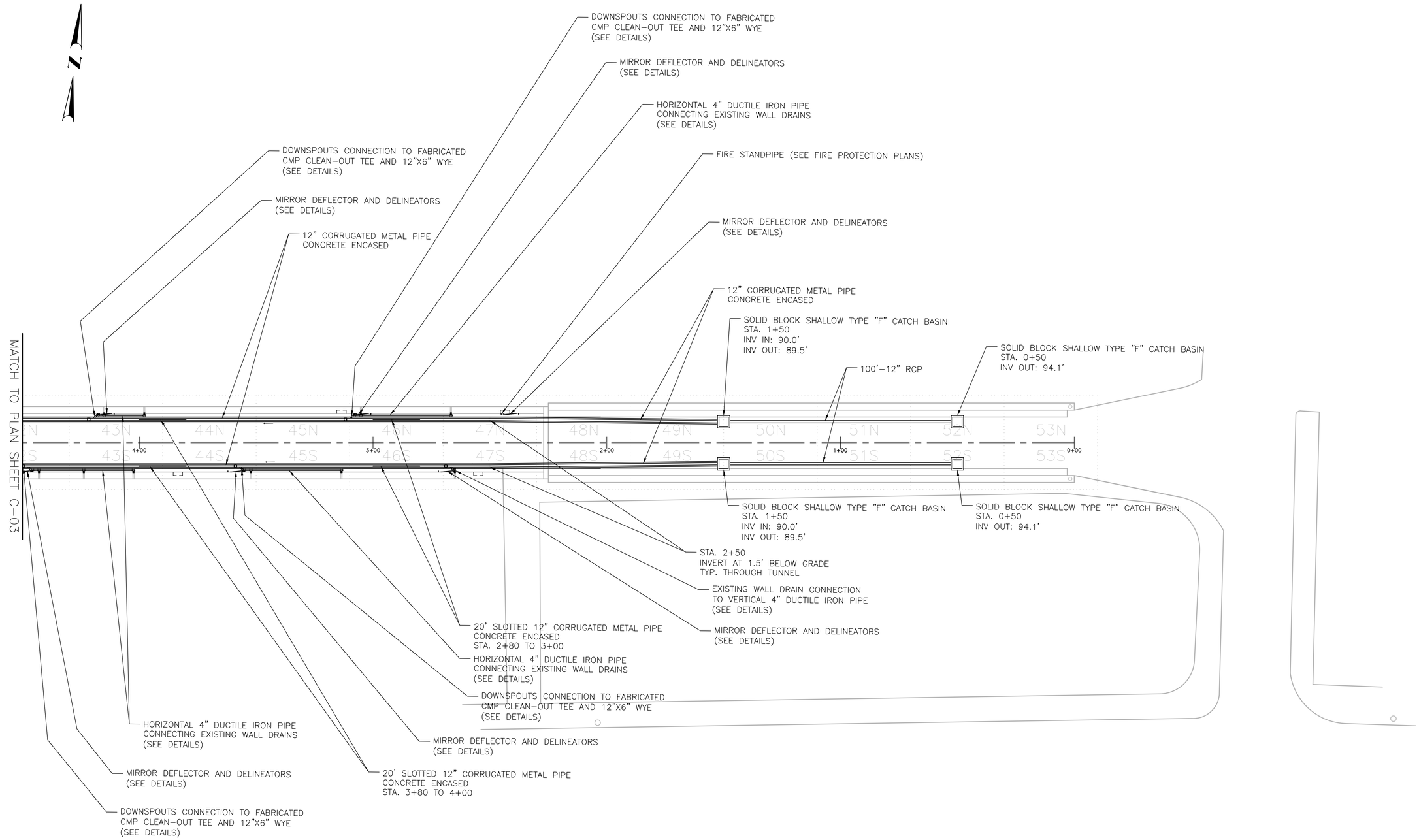

WSP USA INC.

100 SUMMER STREET, 13TH FLOOR
BOSTON, MA. 02110

166 VALLEY STREET, BUILDING 5,
PROVIDENCE, RI 02909

WWW.WSP.COM

RHODE ISLAND PUBLIC TRANSIT AUTHORITY

RHODE ISLAND
PUBLIC TRANSIT AUTHORITY

SCALE: 1"=20'

GRAPHIC SCALE

REVISIONS			REVISIONS		
NO.	DATE	BY	NO.	DATE	BY

EAST SIDE TUNNEL REHABILITATION

PROVIDENCE RHODE ISLAND

DRAINAGE PLAN 4

DESIGNED BY: AP
CHECKED BY: RP
DATE: 06/30/2023
PLAN NO.: C-04
SHEET: 54 OF: 81

TDRAINUTIL004.dwg

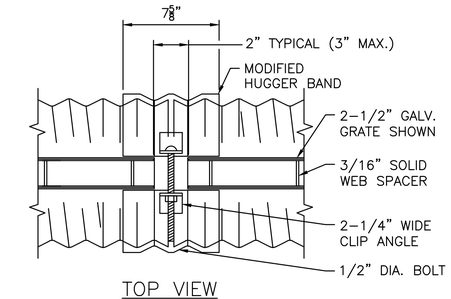

TOP VIEW

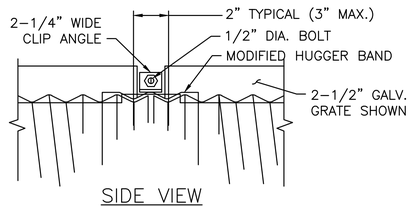

SIDE VIEW

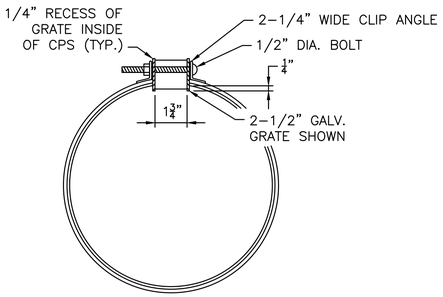

END VIEW

SLOTTED DRAIN
N.T.S.

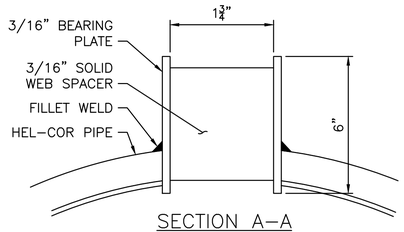

SECTION A–A
STANDARD DETAIL

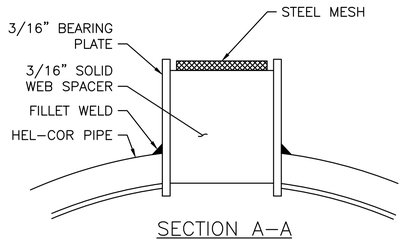

SECTION A–A
DETAIL WITH MESH
STRAIGHT SIDED (VERTICAL) GRATE

SLOTTED DRAIN NOTES:

1. GRATING IS AVAILABLE IN DEPTHS OF 6".
2. FOR 6" VERTICAL REQUIREMENTS, THE SLOTTED DRAIN BAND MAY BE SUPPLIED WITH AN OPTIONAL ANGLE ATTACHMENT.
3. DIMENSIONS ARE SUBJECT TO MANUFACTURING TOLERANCES.

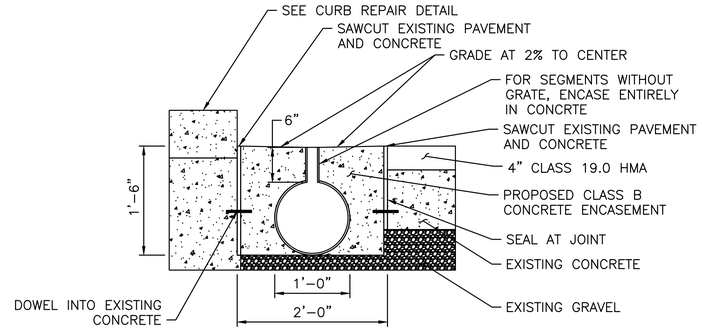

CONCRETE ENCASEMENT FOR 12"
SLOTTED CMP AND 12" CMP DRAIN PIPE
N.T.S.

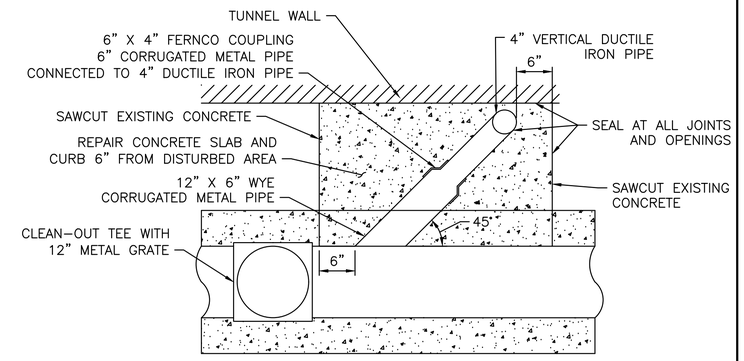

CORRUGATED METAL PIPE
CLEAN-OUT TEE & 12"X6" WYE – PLAN
N.T.S.

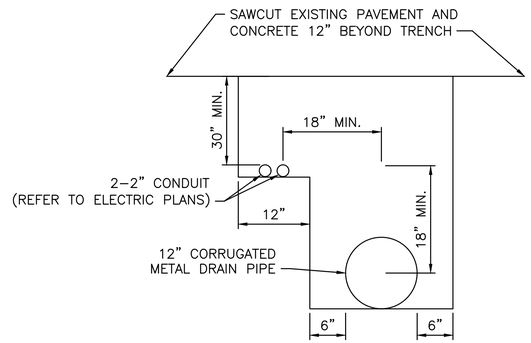

SHARED TRENCH FOR
DRAINAGE AND ELECTRIC
N.T.S.

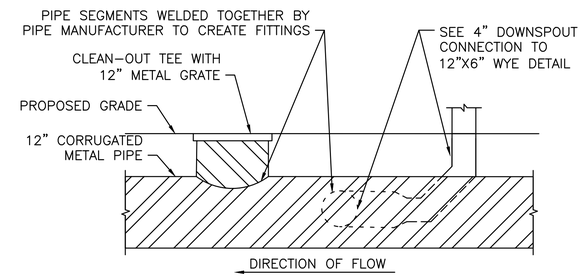

CORRUGATED METAL PIPE
CLEAN-OUT TEE & 12"X6" WYE – ELEVATION
N.T.S.

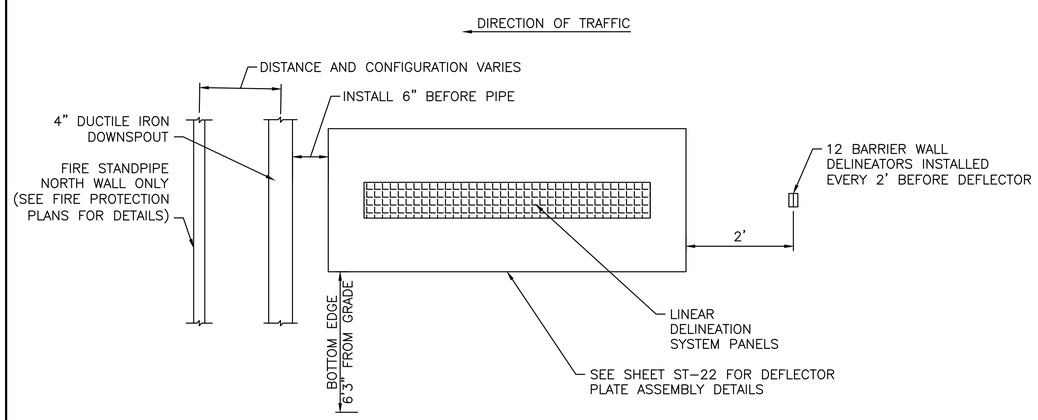

MIRROR DEFLECTOR – ELEVATION
N.T.S.

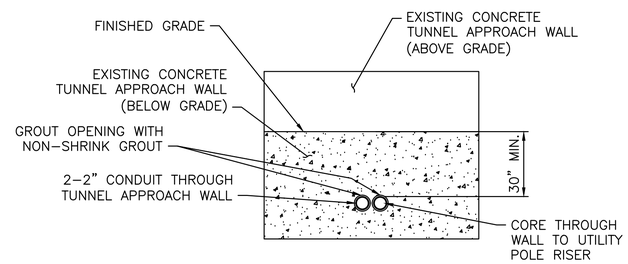

2-2" CONDUIT CORED THROUGH
TUNNEL APPROACH WALL
N.T.S.

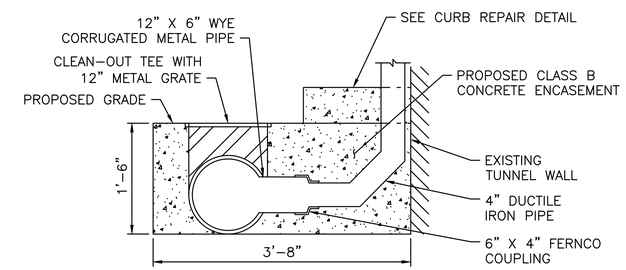

4" DOWNSPOUT CONNECTION TO 12"X6" WYE
N.T.S.

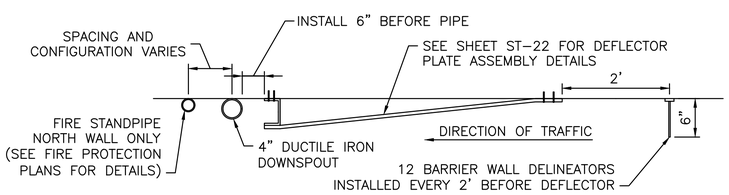

MIRROR DEFLECTOR – PLAN
N.T.S.

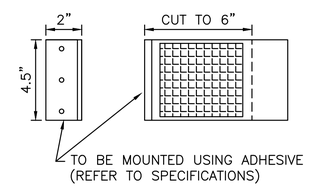

FLEXIBLE
BARRIER WALL DELINEATOR
N.T.S.

WSP USA INC.
100 SUMMER STREET, 13TH FLOOR
BOSTON, MA. 02110
166 VALLEY STREET, BUILDING 5,
PROVIDENCE, RI 02909
WWW.WSP.COM

RHODE ISLAND PUBLIC TRANSIT AUTHORITY

SCALE: NOT TO SCALE

REVISIONS			REVISIONS		
NO.	DATE	BY	NO.	DATE	BY

EAST SIDE TUNNEL REHABILITATION
PROVIDENCE RHODE ISLAND

CIVIL DETAILS - SHEET 1 OF 6

DESIGNED BY: AP
CHECKED BY: RP
DATE: 06/30/2023
PLAN NO.: C-05
SHEET: 55 OF: 81

TDRAINDETL001.dwg

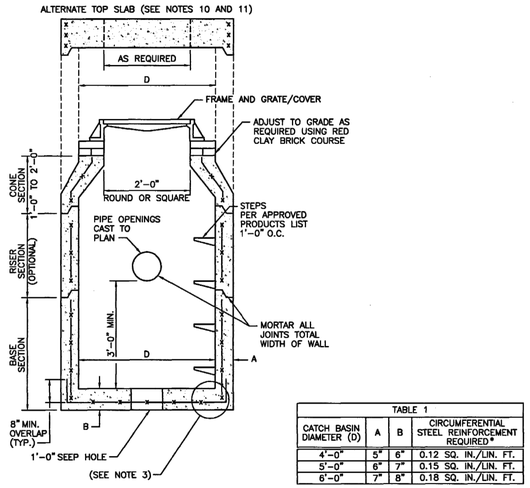

TABLE 1			
CATCH BASIN DIAMETER (D)	A	B	CIRCUMFERENTIAL STEEL REINFORCEMENT REQUIRED*
4'-0"	5"	6"	0.12 SQ. IN./LIN. FT.
5'-0"	6"	7"	0.15 SQ. IN./LIN. FT.
6'-0"	7"	8"	0.18 SQ. IN./LIN. FT.

* FOR LONGITUDINAL (VERTICAL STANDING) REINFORCEMENT REFER TO ASTM C478, ITEM 8.1.2

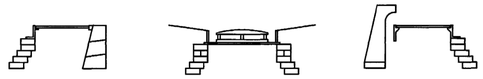

TYPE "D" TYPE "R" TYPE "F"

TYPE CATCH BASIN AS REQUIRED

NOTES:
1. SHALL BE IN ACCORDANCE WITH SECTION 702 OF THE R.I. STANDARD SPECIFICATIONS.
2. SEE TABLE 1 FOR STEEL REINFORCEMENT REQUIREMENTS.
3. STEEL REINFORCEMENT FOR BASE SECTION BOTTOM SHALL BE A MINIMUM OF 0.12 SQ. IN./LIN. FT. (BOTH WAYS).
4. STEPS SHALL CONFORM TO STD. 5.3.0 AND SHALL BE INSTALLED AT THE CASTING PLANT.
5. ONE POUR MONOLITHIC BASE SECTION.
6. ANY NECESSARY ADJUSTMENTS DURING CONSTRUCTION WILL BE DONE BY SAW-CUTTING AND/OR CORING ONLY. NO JACKHAMMERS, HAMMERS AND CHISELS OR PNEUMATIC TOOLS WILL BE ALLOWED.
7. CORBEL MADE OF RED CLAY BRICK WILL BE PERMITTED FOR THE "CONE SECTION" OF THE 4'-0"CATCH BASIN ONLY.
8. FOR CATCH BASIN TYPES "D" AND "F" STEPS MUST BE INSTALLED ON THE CURB SIDE OF THE STRUCTURE.
9. THE CENTERLINE OF THE OPENING MUST BE WITHIN 2'-0" FROM THE STEPS.
10. ALTERNATE TOP SLAB IS STEEL REINFORCED TO MEET OR EXCEED H-25 LOADING (SEE STD. 4.7.2).
11. ALTERNATE TOP SLAB IS ONLY FOR USE WHEN REDUCING SECTION DOES NOT FIT BECAUSE OF STRUCTURE DEPTH.
12. REFER TO STD. 5.2.0 FOR MAXIMUM PIPE SIZES.

RHODE ISLAND DEPARTMENT OF TRANSPORTATION

REVISIONS		
NO.	BY	DATE

PRECAST 4'-0", 5'-0", OR 6'-0" ROUND CATCH BASIN

CHIEF ENGINEER TRANSPORTATION — CHIEF DESIGN ENGINEER TRANSPORTATION — JUNE 15, 1998 ISSUE DATE — R.I. STANDARD 4.4.0

PRECAST 4'-0" ROUND CATCH BASIN
N.T.S.

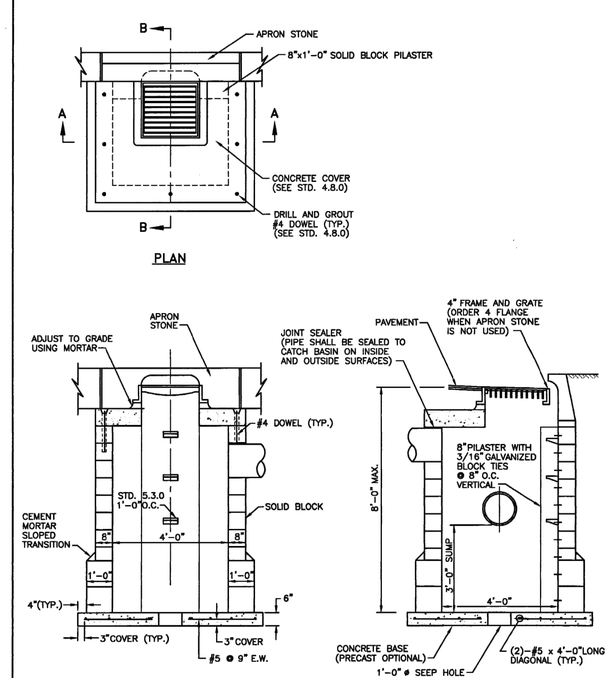

NOTES:
1. SHALL BE IN ACCORDANCE WITH SECTION 702 OF THE R.I. STANDARD SPECIFICATIONS.
2. 1/2" CEMENT MORTAR PLASTER COAT REQUIRED ON ALL INSIDE AND OUTSIDE SURFACES.
3. ADJUST DOWEL LOCATION BASED ON PIPE CONFIGURATION, AS REQUIRED.
4. USE 8" WALLS UP TO 6'-0" DEPTH, USE 1'-0" WALLS UP TO 8'-0" DEPTH.

RHODE ISLAND DEPARTMENT OF TRANSPORTATION

REVISIONS		
NO.	BY	DATE

SOLID BLOCK SHALLOW TYPE "F" SQUARE CATCH BASIN (PIPE COVER 1'-6" TO 3'-0")

CHIEF ENGINEER TRANSPORTATION — CHIEF DESIGN ENGINEER TRANSPORTATION — JUNE 15, 1998 ISSUE DATE — R.I. STANDARD 3.5.0

SOLID BLOCK SHALLOW TYPE "F" SQUARE CATCH BASIN
N.T.S.

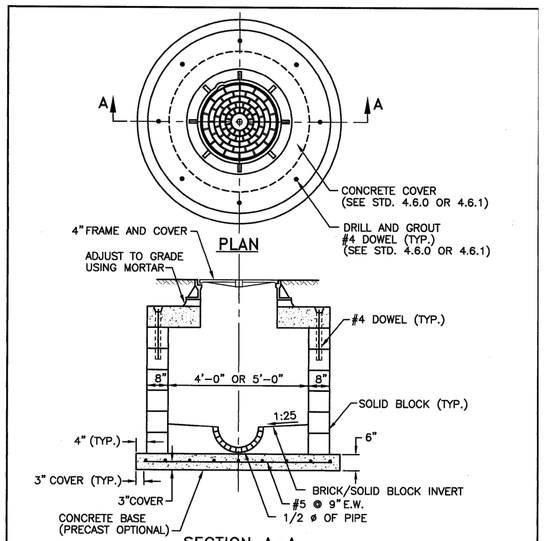

NOTES:
1. SHALL BE IN ACCORDANCE WITH SECTION 702 OF THE R.I. STANDARD SPECIFICATIONS.
2. 1/2" CEMENT MORTAR PLASTER COAT REQUIRED ON ALL INSIDE AND OUTSIDE SURFACES.
3. ADJUST DOWEL LOCATION BASED ON PIPE CONFIGURATION, AS REQUIRED.
4. PIPE COVER FOR THIS DETAIL SHALL BE 1'-6" TO 3'-0".
5. ALL PIPES SHALL BE SEALED TO MANHOLE ON INSIDE AND OUTSIDE SURFACES.
6. REFER TO STD. 5.2.0 FOR MAXIMUM PIPE SIZES.

RHODE ISLAND DEPARTMENT OF TRANSPORTATION

REVISIONS		
NO.	BY	DATE

SOLID BLOCK SHALLOW 4'-0" OR 5'-0" ROUND MANHOLE

CHIEF ENGINEER TRANSPORTATION — CHIEF DESIGN ENGINEER TRANSPORTATION — JUNE 15, 1998 ISSUE DATE — R.I. STANDARD 3.2.2

SOLID BLOCK SHALLOW 4' ROUND MANHOLE
N.T.S.

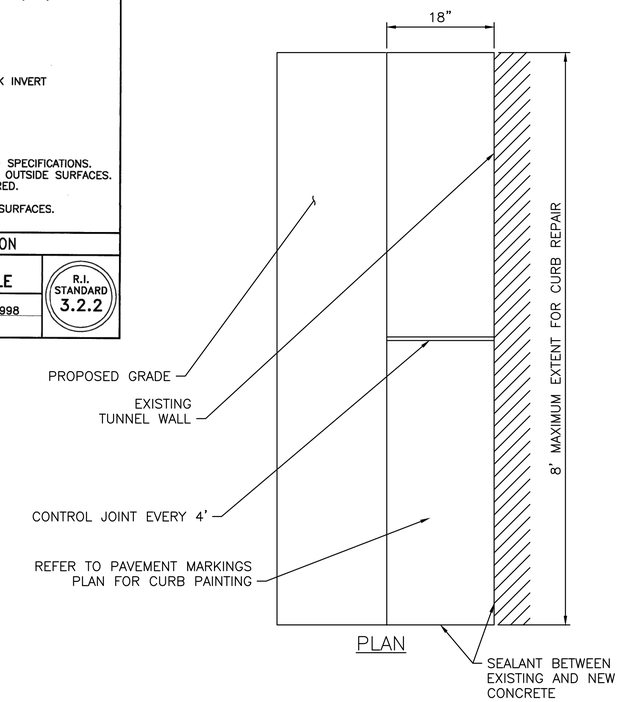

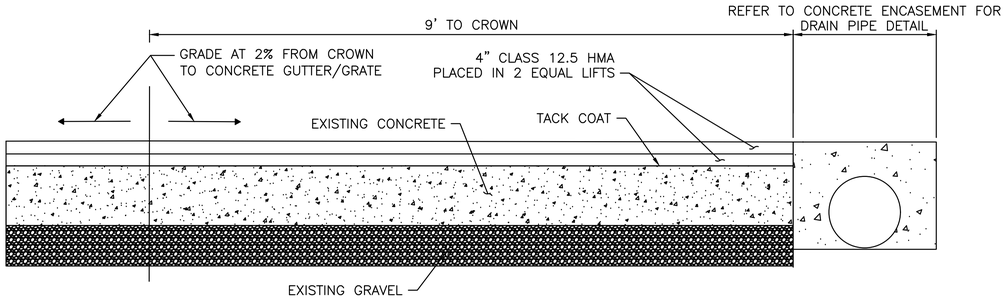

PAVEMENT REPAIR
N.T.S.

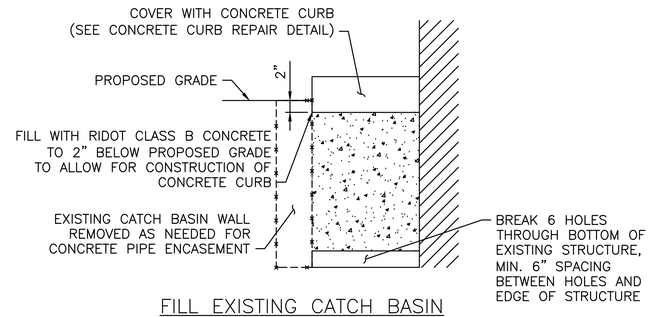

FILL EXISTING CATCH BASIN
N.T.S.

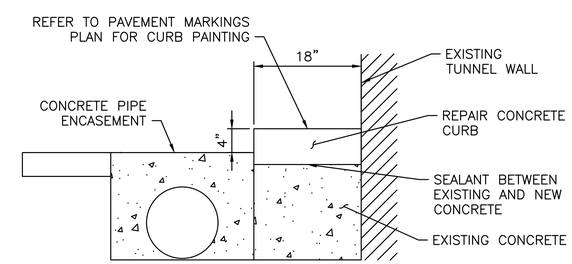

ELEVATION

CONCRETE CURB REPAIR DETAIL
N.T.S.

WSP USA INC.
100 SUMMER STREET, 13TH FLOOR
BOSTON, MA. 02110
166 VALLEY STREET, BUILDING 5,
PROVIDENCE, RI 02909
WWW.WSP.COM

RHODE ISLAND PUBLIC TRANSIT AUTHORITY

RHODE ISLAND
PUBLIC TRANSIT AUTHORITY

SCALE: NOT TO SCALE

REVISIONS			REVISIONS		
NO.	DATE	BY	NO.	DATE	BY

EAST SIDE TUNNEL REHABILITATION

PROVIDENCE — RHODE ISLAND

CIVIL DETAILS - SHEET 2 OF 6

DESIGNED BY: AP
CHECKED BY: RP
DATE: 06/30/2023
PLAN NO.: C-06
SHEET: 56 OF: 81

TDRAINDETL002.dwg

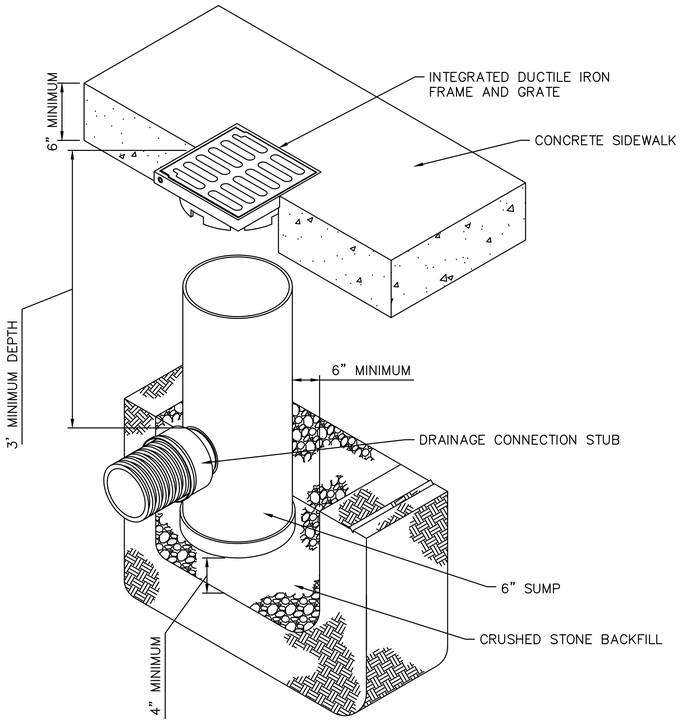

12" NYLOPLAST DRAIN BASIN

N.T.S

NOTES

1 – GRATES/SOLID COVER SHALL BE DUCTILE IRON PER ASTM A536 GRADE 70–50–05.
2 – FRAMES SHALL BE DUCTILE IRON PER ASTM A536 GRADE 70–50–05
3 – DRAINAGE CONNECTION STUB JOINT TIGHTNESS SHALL CONFORM TO ASTM D3212 FOR CORRUGATED HDPE & PVC.

WSP USA INC.
100 SUMMER STREET, 13TH FLOOR
BOSTON, MA. 02110
166 VALLEY STREET, BUILDING 5,
PROVIDENCE, RI 02909
WWW.WSP.COM

RHODE ISLAND PUBLIC TRANSIT AUTHORITY

RHODE ISLAND
PUBLIC TRANSIT AUTHORITY

SCALE: AS NOTED

REVISIONS			REVISIONS		
NO.	DATE	BY	NO.	DATE	BY

EAST SIDE TUNNEL REHABILITATION

PROVIDENCE RHODE ISLAND

CIVIL DETAILS - SHEET 3 OF 6

DESIGNED BY: AP
CHECKED BY: RP
DATE: 06/30/2023
PLAN NO.: C–07
SHEET: 57 OF: 81

TDRAINDETL003.dwg

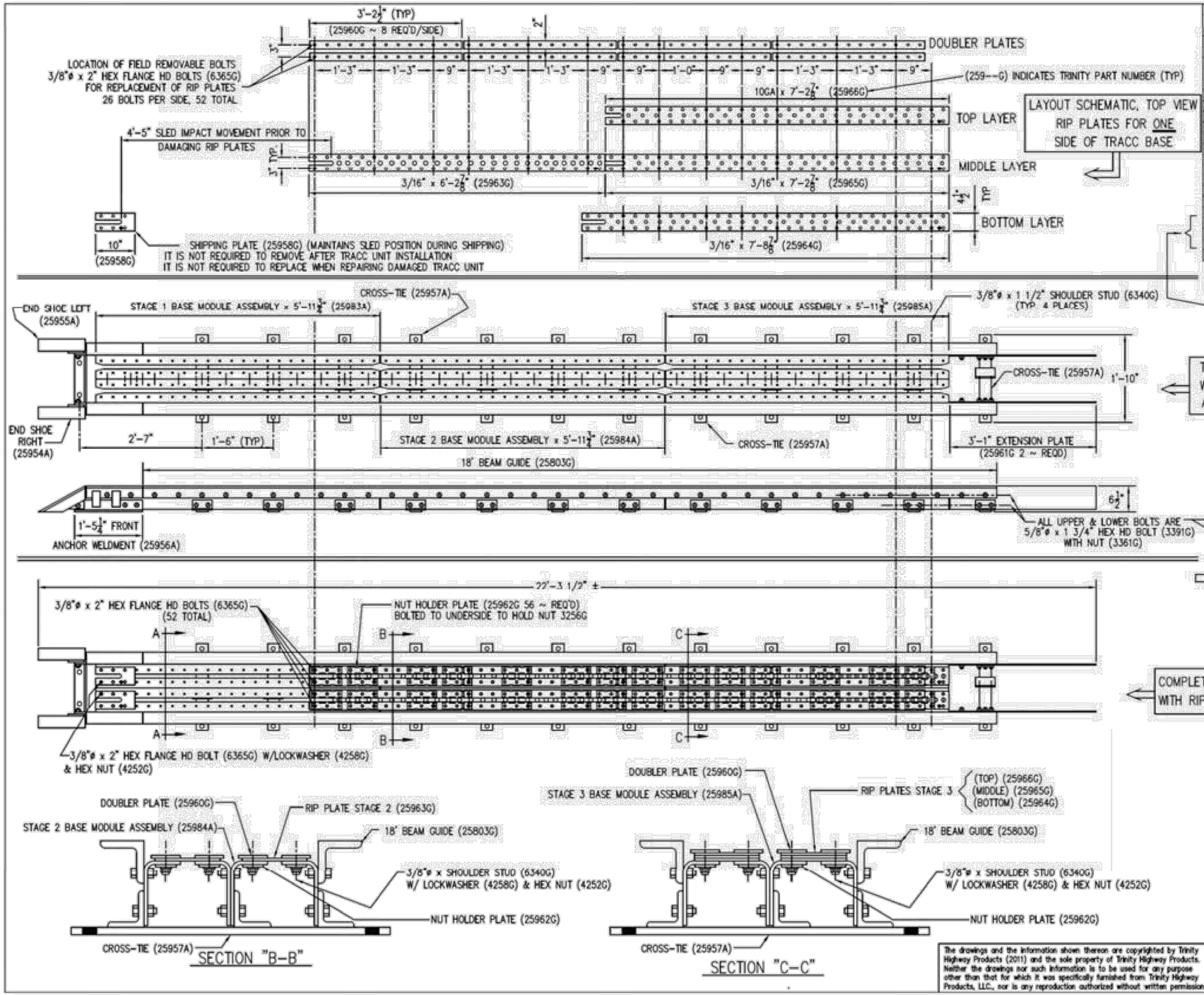

TRACC BASE (25981A) BILL OF MATERIALS

Part #	Description	Qty	WT. EACH (#)	TOTAL WT.
03361G	5/8" Heavy Hex Nut (A563 DH)	102	0.120	12.24
03391G	5/8" x 1 3/4" Hex Head Bolt (A325)	102	0.210	21.42
04252G	3/8" Hex Nut	2	0.030	0.06
04258G	3/8" Lock Washer	2	0.006	0.012
06365G	3/8" x 2" Hex Flange Head Bolt (GR-5)	54	0.070	3.78
25803G	18' Beam Guide	2	180.000	360
25954A	End Shoe, Right	1	11.000	11
25955A	End Shoe, Left	1	11.000	11
25956A	Front Anchor Weldment	1	67.000	67
25957A	Cross Tie	3	18.000	54
25958G	Rip Plate, Stage 1(Shipping Plate)	2	0.800	1.6
25960G	Doublers	16	5.500	88
25961G	Extension Plate, Rear	2	16.000	32
25963G	Rip Plate, Stage 2	2	17.000	34
25964G	Rip Plate, Stage 3, Bottom	2	22.000	44
25965G	Rip Plate, Stage 3, Middle	2	20.000	40
25966G	Rip Plate, Stage 3, Top	2	15.000	30
25983A	Stage 1 Base Module Assembly	1	211.000	211
25984A	Stage 2 Base Module Assembly	1	223.000	223
25985A	Stage 3 Base Module Assembly	1	224.000	224
06340G	3/8" x 1 1/2" SHOULDER STUD	4	0.060	0.24
			TOTAL WEIGHT	1468.35

TRACC

TRACC
CRASH-CUSHION ATTENUATING TERMINAL
ASSEMBLED BASE UNIT
PN 25981

TRINITY HIGHWAY SAFETY PRODUCTS, INC.
2525 STEMMONS FREEWAY
DALLAS, TX 75207

DRAWN	BT/LH
CHECKED	B.T.
SCALE	N.T.S.
DATE	04/22/05
ENG. FILE #	SS1001-01E
SHT.No.	E1 OF 1
DRAWING NO.	SS 1001/PN 25981
REV.	6

CRASH ATTENUATOR

N.T.S.

WSP USA INC.
100 SUMMER STREET, 13TH FLOOR
BOSTON, MA. 02110
166 VALLEY STREET, BUILDING 5,
PROVIDENCE, RI 02909
WWW.WSP.COM

RHODE ISLAND PUBLIC TRANSIT AUTHORITY

RHODE ISLAND
PUBLIC TRANSIT AUTHORITY

SCALE: NOT TO SCALE

REVISIONS			REVISIONS		
NO.	DATE	BY	NO.	DATE	BY

EAST SIDE TUNNEL REHABILITATION

PROVIDENCE RHODE ISLAND

CIVIL DETAILS - SHEET 4 OF 6

DESIGNED BY: AP
CHECKED BY: RP
DATE: 06/30/2023
PLAN NO.: C-08
SHEET: 58 OF: 81

TDRAINDETL004.dwg

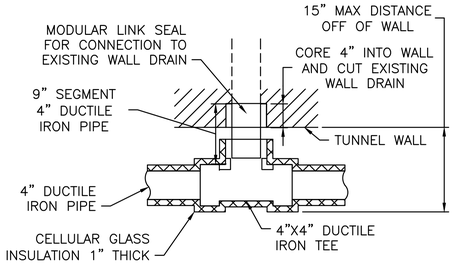

WALL DRAIN CONNECTION
TO HORIZONTAL INSULATED 4" DIP – PLAN
N.T.S.

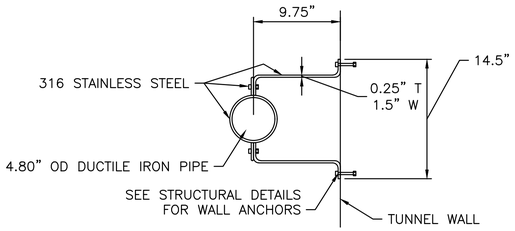

PIPE HANGER FOR HORIZONTAL 4" DIP
N.T.S.

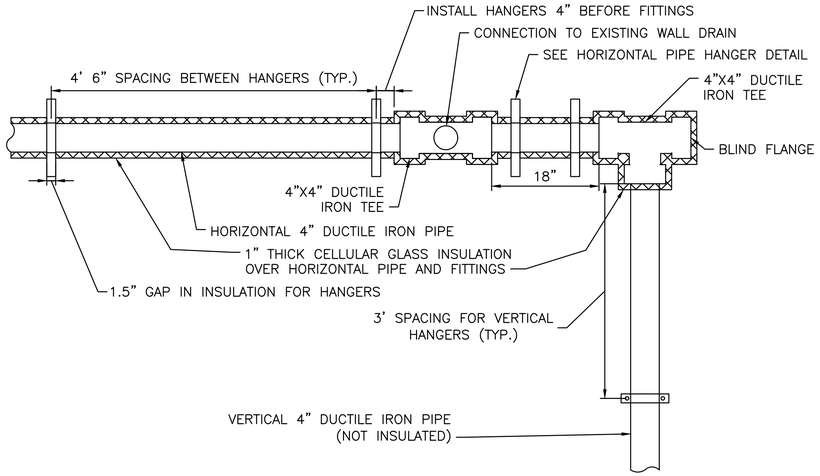

INSULATED HORIZONTAL 4" DIP AND TRANSITION
TO VERTICAL 4" DIP – FRONT ELEVATION
N.T.S.

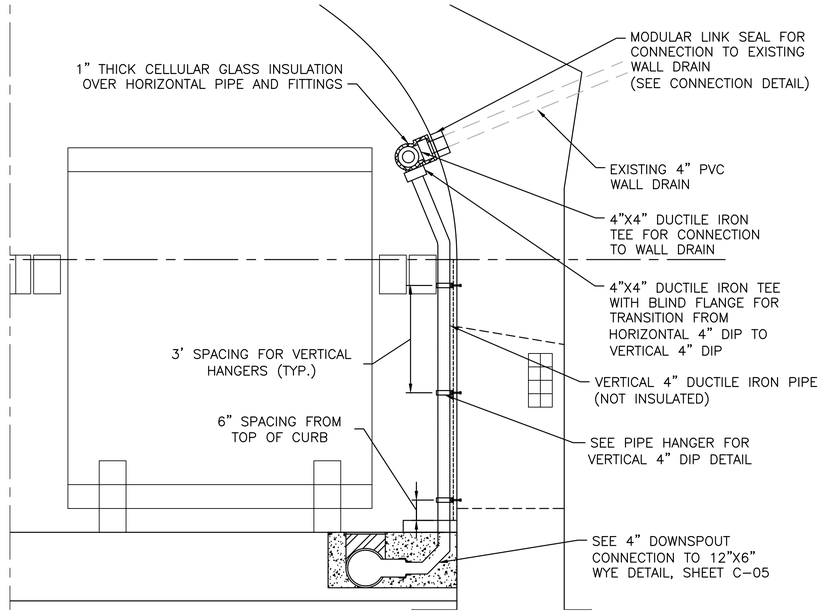

INSULATED HORIZONTAL 4" DIP AND TRANSITION
TO VERTICAL 4" DIP – SIDE ELEVATION
N.T.S.

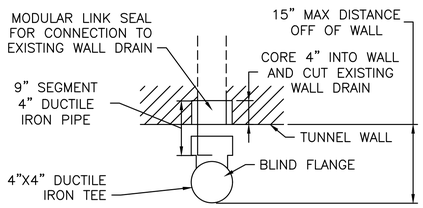

WALL DRAIN CONNECTION
TO VERTICAL 4" DIP – PLAN
N.T.S.

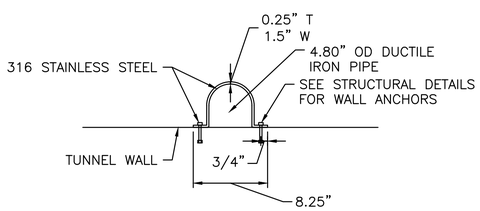

PIPE HANGER FOR VERTICAL 4" DIP
N.T.S.

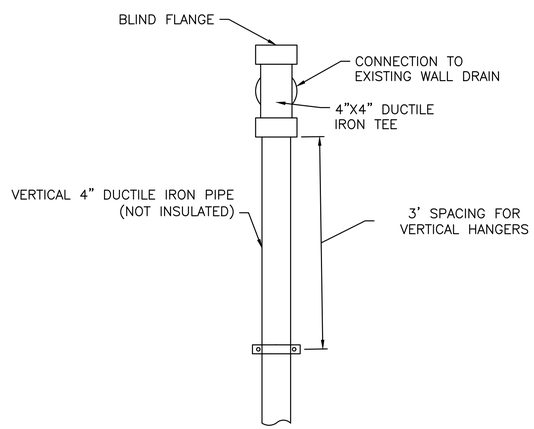

WALL DRAIN CONNECTION
TO VERTICAL 4" DIP – FRONT ELEVATION
N.T.S.

WALL DRAIN CONNECTION TO VERTICAL 4" DIP NOTES:

1. TO BE USED AS SPECIFIED ON PLANS, AT LOCATIONS WHERE EXISTING WALL DRAIN SHALL NOT BE CONNECTED TO ANY OTHER WALL DRAIN VIA A HORIZONTAL PIPE.

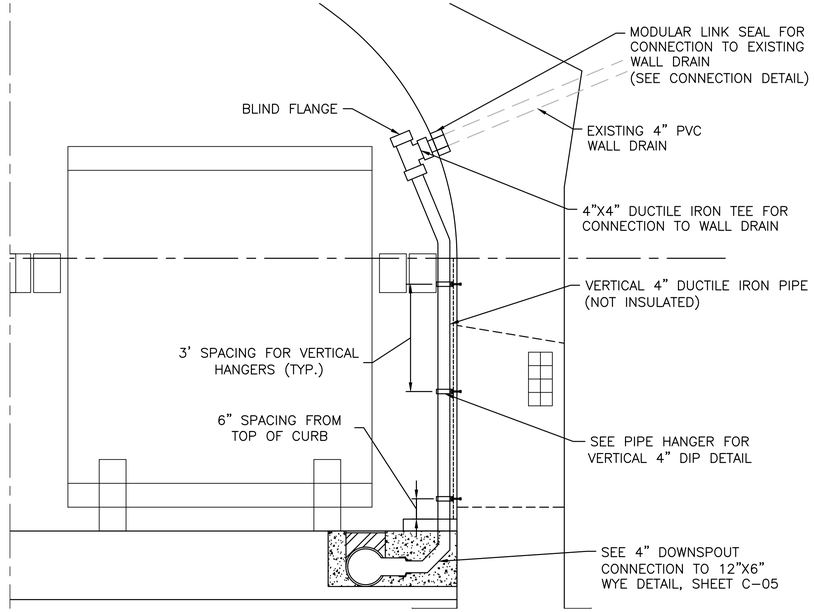

WALL DRAIN CONNECTION
TO VERTICAL 4" DIP – SIDE ELEVATION
N.T.S.

WSP USA INC.
100 SUMMER STREET, 13TH FLOOR
BOSTON, MA. 02110
166 VALLEY STREET, BUILDING 5,
PROVIDENCE, RI 02909
WWW.WSP.COM

RHODE ISLAND PUBLIC TRANSIT AUTHORITY

RHODE ISLAND
PUBLIC TRANSIT AUTHORITY

SCALE: NOT TO SCALE

REVISIONS			REVISIONS		
NO.	DATE	BY	NO.	DATE	BY

EAST SIDE TUNNEL REHABILITATION
PROVIDENCE RHODE ISLAND

CIVIL DETAILS - SHEET 5 OF 6

DESIGNED BY: AP
CHECKED BY: RP
DATE: 06/30/2023
PLAN NO.: C-09
SHEET: 59 OF: 81

TDRAINDETL005.dwg

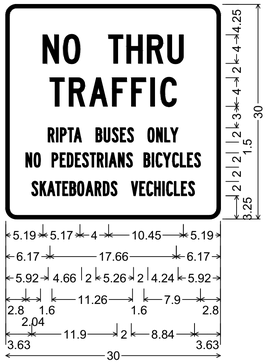

1.50" Radius, 0.50" Border, White on White;
"NO THRU" Black, C 80% spacing;
"TRAFFIC" Black, C;
"RIPTA BUSES ONLY" Black, B 80% spacing;
"NO PEDESTRIANS BICYCLES" Black, B 80% spacing;
"SKATEBOARDS VECHICLES" Black, B 80% spacing;
Table of distances between letter and object lefts

5.19	N 2.86	O 6.31	T 2.54	H 2.86	R 2.86	U 2.19	5.19		
6.17	T 2.68	R 2.86	A 3.18	F 2.67	F 2.68	I 1.40	C 2.19	6.17	
5.92	R 1.14	I 0.55	P 1.08	T 0.83	A 3.06	B 1.15	U 1.14	S 1.14	E 0.99
	S 2.84	O 1.21	N 1.14	L 0.83	Y 1.06	5.92	2.80	N 1.14	O 2.50
	2.50	P 1.15	E 0.99	D 1.14	E 0.99	S 1.08	T 0.99	R 1.14	I 0.49	A 1.31	N 1.14
	S 2.44	B 1.14	I 0.55	C 1.00	Y 1.31	C 1.08	L 0.99	E 0.99	S 0.84	2.80	
3.63	S 1.14	K 1.04	A 1.14	T 0.99	E 0.99	B 1.09	O 1.14	A 1.30	R 1.15	D 1.08	
	S 2.84	V 1.17	E 0.99	C 1.08	H 1.14	I 0.55	C 1.08	L 0.99	E 0.99	S 0.85	3.63

SIGN 01
N.T.S.

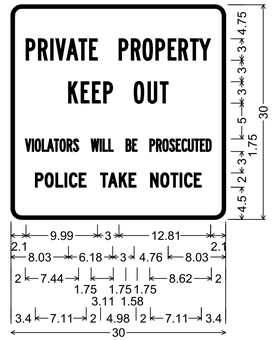

1.50" Radius, 0.50" Border, White on White;
"PRIVATE PROPERTY" Black, B 80% spacing;
"KEEP OUT" Black, B;
"VIOLATORS WILL BE PROSECUTED" Black, B specified length;
"POLICE TAKE NOTICE" Black, C 80% spacing;
Table of distances between letter and object lefts

2.10	P 1.72	R 1.71	I 0.73	V 1.51	A 1.71	T 1.48	E 4.13		
	P 1.71	R 1.63	O 1.81	P 1.71	E 1.48	R 1.63	T 1.24	Y 1.60	2.10
8.03	K 1.76	E 1.58	E 1.57	P 4.27	O 1.92	U 1.71	T 1.13	8.03	
2.00	V 0.96	I 0.40	O 0.98	L 0.71	A 0.98	T 0.80	O 0.98	R 0.89	S 2.49
	W 1.24	I 0.41	L 0.81	L 2.40	B 0.93	E 2.40	P 0.93	R 0.89	O 0.94
S 0.93	E 0.80	C 0.89	U 0.89	T 0.81	E 0.80	D 0.74	2.00		
3.40	P 1.37	O 1.49	L 1.27	I 0.62	C 1.36	E 3.00	T 1.09	A 1.52	K 1.37
					E 3.00	N 1.43	O 1.42	T 1.27	I 0.62	C 1.37	E 1.00	3.40

SIGN 02
N.T.S.

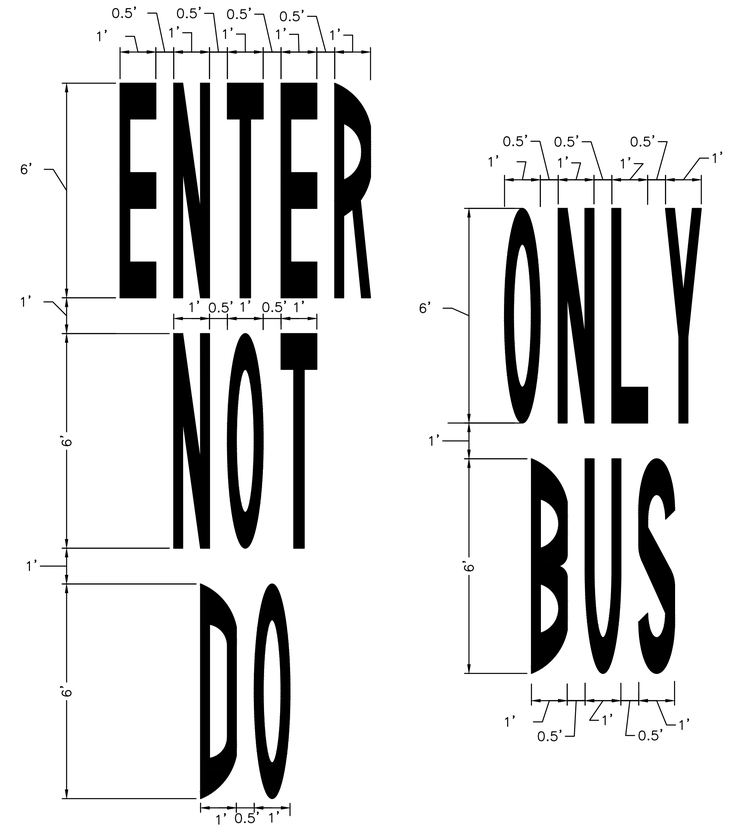

PAINTED TEXT PAVEMENT MARKINGS
N.T.S.

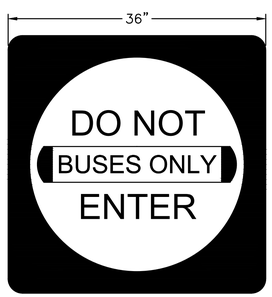

MUTCD R5-1
N.T.S.

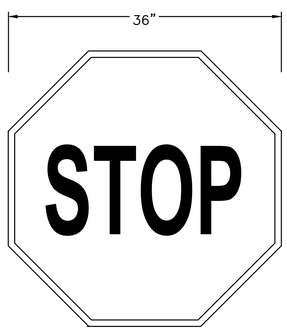

MUTCD R1-1
N.T.S.

MUTCD R11-2
N.T.S.

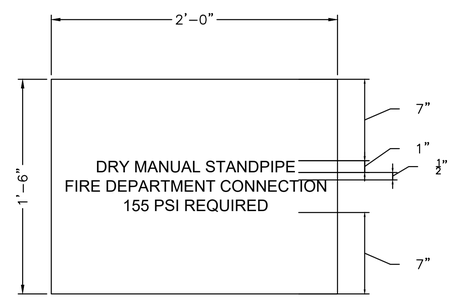

STAINLESS STEEL
BACKGROUND COLOR: WHITE
TEXT COLOR: RED
FONT: FRANKLIN GOTHIC MEDIUM CONDENSED

FDC SIGN AT WEST END OF TUNNEL
N.T.S.

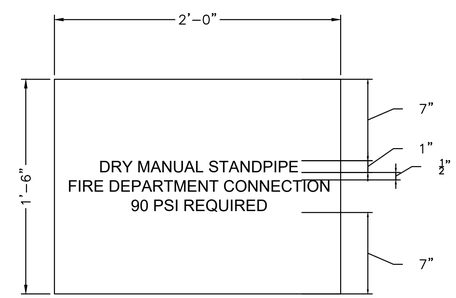

STAINLESS STEEL
BACKGROUND COLOR: WHITE
TEXT COLOR: RED
FONT: FRANKLIN GOTHIC MEDIUM CONDENSED

FDC SIGN AT EAST END OF TUNNEL
N.T.S.

WSP USA INC.
100 SUMMER STREET, 13TH FLOOR
BOSTON, MA. 02110
166 VALLEY STREET, BUILDING 5,
PROVIDENCE, RI 02909
WWW.WSP.COM

RHODE ISLAND
PUBLIC TRANSIT AUTHORITY

SCALE: NOT TO SCALE

REVISIONS			REVISIONS		
NO.	DATE	BY	NO.	DATE	BY

EAST SIDE TUNNEL REHABILITATION
PROVIDENCE RHODE ISLAND
CIVIL DETAILS - SHEET 6 OF 6

DESIGNED BY: AP
CHECKED BY: RP
DATE: 06/30/2023
PLAN NO.: C-10
SHEET: 60 OF: 81

TDRAINDETL006.dwg

GENERAL NOTES:

1. INTENT: THE INTENT OF THE DRAWINGS IS TO PROVIDE THAT THE WORK AND ALL PARTS THEREOF SHALL BE, WHEN FULLY COMPLETED, SUITABLE IN EVERY WAY FOR THE PURPOSES FOR WHICH IT IS INTENDED. PROVIDE ALL MATERIALS AND LABOR NECESSARY TO MAKE THE SYSTEM FULLY OPERABLE AND IN COMPLIANCE WITH ALL APPLICABLE CODES.
2. DRAWINGS: THE DRAWINGS ARE GENERALLY DIAGRAMMATIC AND INDICATIVE OF THE WORK TO BE PERFORMED AND SHALL BE FOLLOWED AS CLOSELY AS POSSIBLE. EXACT LOCATIONS OF DUCTWORK, PIPING, ETC. SHALL BE DETERMINED AT THE SITE TO SUIT ACTUAL SITE CONDITIONS.
3. COORDINATION: COORDINATE ALL WORK, SYSTEM LAYOUTS AND WORK SCHEDULES WITH RIPTA AND THAT OF OTHER TRADES AFFECTED BY THE ENTIRE SCOPE OF THE PROJECT SO THAT ALL WORK MAY BE INSTALLED IN THE MOST DIRECT AND WORKMANLIKE MANNER AND SO THAT INTERFERENCE WITH DUCTWORK, PIPING, EQUIPMENT, ELECTRICAL, ARCHITECTURAL AND STRUCTURAL COMPONENTS AND OTHER WORK IS AVOIDED.
4. INSTALLATION SHALL PERMIT ACCESSIBILITY FOR SERVICE OR REPLACEMENT. COORDINATE INSTALLATION OF ALL EQUIPMENT AND COMPONENTS FOR ACCESSIBILITY TO MEET MANUFACTURER REQUIRED CLEARANCES AROUND EQUIPMENT FOR MAINTENANCE AND REPAIR. THE INSTALLATION OF BUILDING MATERIALS AND COMPONENTS SHALL ALLOW SUFFICIENT SPACE FOR MAINTENANCE AND SERVICE WITHOUT LIMITED RANGE OF MOTION THAT WOULD REQUIRE DECONSTRUCTION OF THE SPACE OR INSTALLATION TO PROVIDE REQUIRED SERVICE. CONTRACTOR SHALL DEMONSTRATE SAFE ACCESS TO ALL ITEMS REQUIRING FUTURE MAINTENANCE AND REPAIR. WHENEVER THERE IS A DISPUTE ABOUT ACCESSIBILITY DURING CONSTRUCTION AND/OR THE TURNOVER PROCESS, THE ONUS SHALL BE ON THE CONTRACTOR TO DEMONSTRATE HOW THE FUTURE WORK WOULD NEED TO BE PERFORMED IN A MANNER THAT IS REASONABLE, SAFE AND AFFORDABLE.
5. WHEREVER THE REQUIREMENTS AND REGULATIONS OF FEDERAL OR STATE ARE MORE STRINGENT THAN THE REQUIREMENTS INDICATED ON THE DRAWINGS OR SPECIFICATIONS, THEY SHALL TAKE PRECEDENCE OVER THE DRAWINGS OR SPECIFICATIONS AND SHALL BE MADE PART OF THE CONTRACT AT NO ADDITIONAL COST TO THE OWNER. HOWEVER WHERE THE DRAWINGS OR SPECIFICATIONS ARE MORE STRINGENT THAN FEDERAL OR STATE AUTHORITY REQUIREMENTS AND REGULATION, THE MORE STRINGENT SHALL APPLY.
6. SYSTEM DESIGN, EQUIPMENT SIZES AND SPACE ALLOCATIONS FOR MECHANICAL EQUIPMENT ARE BASED ON INFORMATION FROM THE SCHEDULED MANUFACTURER. THE CONTRACTOR SHALL VERIFY ACTUAL DESIGNS, MAINTENANCE REQUIREMENTS AND SIZES BASED ON EQUIPMENT SUPPLIER'S DESIGN REQUIREMENTS, MAINTENANCE REQUIREMENTS AND CERTIFIED DRAWINGS AND MODIFY WORK AS REQUIRED TO SUIT SIZES OF ACTUAL EQUIPMENT TO BE PROVIDED WITHOUT ANY ADDITIONAL COST TO THE OWNER.
7. ELECTRICAL POWER PROVISIONS FOR MECHANICAL EQUIPMENT ARE BASED ON PRELIMINARY INFORMATION FROM THE SCHEDULED MANUFACTURER. THE CONTRACTOR SHALL SUBMIT A SCHEDULE OF ANY PROPOSED CHANGES FOR ACCEPTANCE BY THE ENGINEER. ALL ACCEPTED CHANGES SHALL BE RECORDED ON "AS BUILT" DRAWINGS.
8. LOCATIONS OF ROOM THERMOSTATS AND TEMPERATURE SENSORS ARE APPROXIMATE AND FINAL LOCATIONS SHALL BE COORDINATED AT THE FIELD.
9. PROVIDE LOCAL CONTROLS FOR THE CONTROL AND MONITORING OF EQUIPMENT FURNISHED UNDER THIS SECTION AS INDICATED ON THE AUTOMATIC TEMPERATURE CONTROLS DRAWINGS.
10. PROVIDE STICK ON IDENTIFICATION LABELS FOR ALL TEMPERATURE SENSORS, WITH IDENTIFICATION OF EQUIPMENT CONTROLLED OR FUNCTION.

DEMOLITION NOTES:

1. ALL MECHANICAL COMPONENTS, SENSORS, SUPPORTS, CONDUITS, ETC. ASSOCIATED WITH THE EXISTING MECHANICAL HVAC SYSTEM SHALL BE NEATLY REMOVED, DEMOLISHED AND PROPERLY DISPOSED.
2. ALL ITEMS REMOVED SHALL BECOME THE PROPERTY OF THE CONTRACTOR, UNLESS NOTED OTHERWISE, REMOVE DEMOLISHED DEVICES FROM CONSTRUCTION SITE. DISPOSE OF IN ACCORDANCE WITH APPLICABLE FEDERAL, STATE, AND LOCAL REGULATION.

HVAC LEGEND

- NEW WORK (SHOWN DARK)
- EXISTING (SHOWN LIGHT)
- ITEM TO BE DEMOLISHED (DARK, DASHED)
- DUCT
- SUPPLY DUCT UP
- SUPPLY DIFFUSER (SEE SCHEDULE AND DRAWING FOR CFM)
- RETURN OR EXHAUST DIFFUSER
- TS — TEMPERATURE SENSOR
- T — THERMOSTAT
- CT — CURRENT TRANSDUCER
- BDD — BACK DRAFT DAMPER
- M — MOTOR OPERATED DAMPER (MOD)
- TO BE DEMOLISHED
- ## — PHOTO INDICATION AS INDICATED

HVAC ABBREVIATIONS

AFF	ABOVE FINISHED FLOOR
BDD	BACK DRAFT DAMPER
EF	EXHAUST FAN
EUH	ELECTRIC UNIT HEATER
EXTR	EXTERIOR
FD	FIRE DAMPER
INTR	INTERIOR
NIC	NOT IN CONTRACT
NTS	NOT TO SCALE
WMS	WIRE MESH SCREEN

SUMMARY SCOPE OF MECHANICAL WORK:

1. DEMOLISH EXISTING LOUVER AND MANUALLY OPERATED WALL DAMPER.
2. PROVIDE NEW ELECTRIC UNIT HEATER, IN-LINE FAN, DUCTWORK AND ALL ASSOCIATED CONTROLS.
3. PERFORM TESTING. ADJUSTING AND BALANCING. BALANCE EXHAUST FAN AND DIFFUSER TO INDICATED FLOW RATES +/- 5%.

ELECTRIC UNIT HEATER SCHEDULE

UNIT NO.	MANUFACTURER	MODEL	AREA SERVED	CAPACITY (KW)	ELECTRIC (V/PH/HZ)	REMARKS
EUH-1	QMARK	MUH0381	ELECTRIC ROOM	3	208/1/60	1, 2, 3

NOTES: QMARK USED AS BASIS OF DESIGN, PROVIDE QMARK, REZNOR, MODINE, STERLING OR APPROVED EQUAL
(1) PROVIDE WITH HORIZONTAL MOUNTING BRACKET.
(2) UNITS SHALL BE CONTROLLED BY INTEGRAL THERMOSTAT.
(3) UNITS SHALL BE WALL OR CEILING HUNG.

LOUVER SCHEDULE

MANUFACTURER	MODEL	AREA SERVED	LOUVER		REMARKS
			QTY(SIZE)	% FREE AREA	
GREENHECK	BVE	ELECTRIC ROOM	12"X11 3/4"	31	1, 2, 3

NOTES: (1) GREENHECK USED AS BASIS OF DESIGN. PROVIDE GREENHECK, BUCKLEY, COOK OR APPROVED EQUAL.
(2) 4" EXTRUDED ALUMINUM FIXED HORIZONTAL BRICK VENT. COLOR SHALL BE STANDARD MANUFACTURERS COLOR.
(3) PROVIDE WITH 1/2" WIRE MESH BIRD SCREEN

FAN SCHEDULE

UNIT NO.	MANUFACTURER	MODEL	AREA SERVED	BELT (B) DIRECT DRIVE (D)	AIR FLOW (CFM)	SP (IN W.G)	MOTOR HP	ELECTRIC			MAX SONES	REMARKS
								VOLTS	PH	HZ		
EF-1	GREENHECK	BSQ-70	ELECTRIC ROOM	D	150	0.16	1/4	115	1	60	14	1, 2, 3

NOTES: (1) GREENHECK USED AS BASIS OF DESIGN. PROVIDE GREENHECK, AEROVENT, LOREN COOK, PENN OR APPROVED EQUAL. PROVIDE PREMIUM EFFICIENCY MOTORS ALL FANS.
(2) CEILING HUNG DIRECT DRIVE EXHAUST FAN. PROVIDE WITH BACKDRAFT DAMPER.
(3) PROVIDE WITH VIBRATION ISOLATION DEVICES.

WSP USA INC.
100 SUMMER STREET, 13TH FLOOR
BOSTON, MA. 02110
166 VALLEY STREET, BUILDING 5,
PROVIDENCE, RI 02909
WWW.WSP.COM

RHODE ISLAND PUBLIC TRANSIT AUTHORITY

RHODE ISLAND
PUBLIC TRANSIT AUTHORITY

REVISIONS			REVISIONS		
NO.	DATE	BY	NO.	DATE	BY

EAST SIDE TUNNEL REHABILITATION

PROVIDENCE RHODE ISLAND

MECHANICAL GENERAL NOTES, ABBREVIATIONS, SYMBOLS, SCHEDULES

DESIGNED BY: JGB
CHECKED BY: DTD
DATE: 06/30/2023
PLAN NO.: M-01
SHEET: 61 OF: 81

MECHNOTE1.dwg

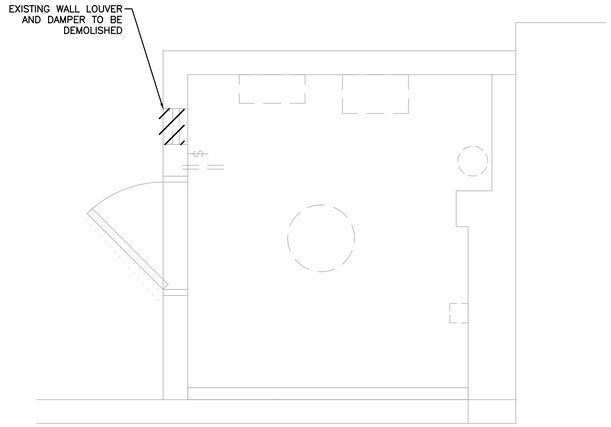

ELECTRICAL ROOM PLAN
EXISTING CONDITION
N.T.S.

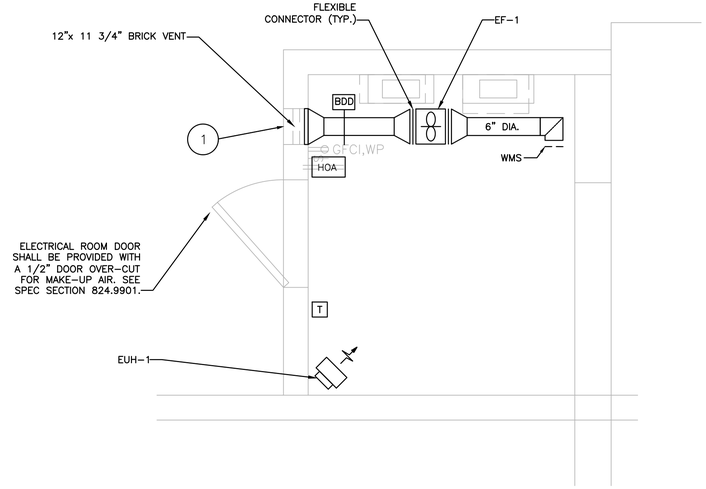

ELECTRICAL ROOM PLAN
PROPOSED CONDITION
N.T.S.

1 PHOTO 1–EXISTING LOUVER TO BE DEMOLISHED

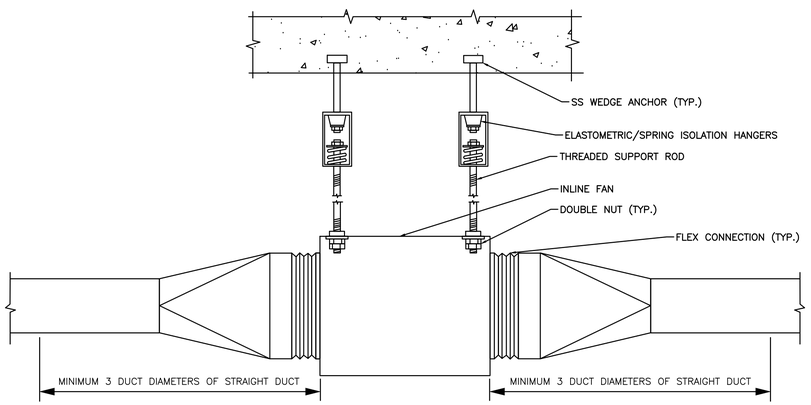

A IN LINE FAN MOUNTING DETAIL
SCALE: NTS

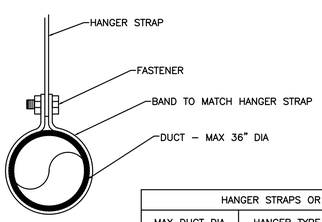

HANGER STRAPS OR RODS		
MAX DUCT DIA	HANGER TYPE	MAX SPACING FEET
2'–0"	ONE 1" x 22" GA STRAP	12'–0"

B ROUND DUCT HANGER DETAIL
SCALE: NTS

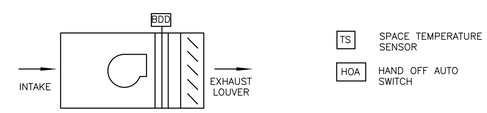

SEQUENCE OF OPERATION

EXHAUST FAN EF–1 SHALL BE CONTROLLED BY A HAND/OFF/AUTO SWITCH WITH INDICATING LIGHTS LOCATED IN THE ELECTRICAL ROOM AND VIA A TEMPERATURE SENSOR LOCATED IN THE ELECTRICAL ROOM

IF THE HOA SWITCH IS PLACED IN THE HAND POSTION, THE EXHAUST FAN SHALL START.

IF THE HOA SWITCH IS PLACED IN THE AUTOMATIC POSITION, UPON A RISE IN TEMPERATURE ABOVE SETPOINT (80°, ADJUSTABLE) AS SENSED BY THE TEMPERATURE SENSOR THE FAN SHALL START.

ATC – EXHAUST FAN, EF–1

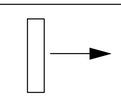

ELECTRIC HEATER

SEQUENCE OF OPERATIONS

ELECTRIC UNIT HEATERS SHALL BE CONTROLLED BY AN INTEGRAL TEMPERATURE SENSOR. THE TEMPERATURE SHALL START THE HEATER UPON A FALL IN TEMPERATURE BELOW SETPOINT (50°F, ADJUSTABLE) AS SENSED BY THE TEMPERATURE SENSOR AND STOP THE HEATER UPON A RISE IN TEMPERATURE ABOVE SETPOINT.

ATC – ELECTRIC UNIT HEATER, EUH–1

WSP USA INC.
100 SUMMER STREET, 13TH FLOOR
BOSTON, MA. 02110
166 VALLEY STREET, BUILDING 5,
PROVIDENCE, RI 02909
WWW.WSP.COM

RHODE ISLAND PUBLIC TRANSIT AUTHORITY

RHODE ISLAND
PUBLIC TRANSIT AUTHORITY

REVISIONS			REVISIONS		
NO.	DATE	BY	NO.	DATE	BY

EAST SIDE TUNNEL REHABILITATION
PROVIDENCE RHODE ISLAND
MECHANICAL EXIST. & PROP. PLANS, DETAILS, & AUTOMATIC TEMPERATURE CONTROLS

DESIGNED BY: JBG
CHECKED BY: DTD
DATE: 06/30/2023
PLAN NO.: M–02
SHEET: 62 OF: 81

MECHDETL1.dwg

GENERAL NOTES:

1. THE CONTRACTOR SHALL REVIEW AND BE FAMILIAR WITH ALL CONTRACT DWGS. PRIOR TO ELECTRICAL EQUIPMENT AND MATERIAL INSTALLATION. LOCATIONS SHOWN FOR CONNECTIONS TO EQUIPMENT ARE DIAGRAMMATIC. INSTALL FOR EASE OF MAINTENANCE AND TO SUIT EQUIPMENT.
2. THE CONTRACT DRAWINGS ARE DIAGRAMMATIC IN NATURE. THE EXACT LOCATION SHALL BE VERIFIED IN THE FIELD BEFORE COMMENCING ANY FABRICATION, ORDERING ANY MATERIAL, OR PERFORMING ANY WORK. ANY DEPARTURE FROM CONCEPT SHOWN ON THE CONTRACT DRAWINGS SHALL BE SUBMITTED TO THE ENGINEER FOR APPROVAL.
3. ALL ELECTRICAL WORK SHALL MEET ALL REQUIREMENTS OF THE 2020 EDITION OF THE NATIONAL ELECTRICAL CODE, NATIONAL ELECTRIC SAFETY CODE, THE STATE OF RHODE ISLAND DOT STANDARD SPECIFICATIONS FOR ROAD AND BRIDGE CONSTRUCTION, NFPA 502, UL2196, ALL LOCAL AND STATE CODES AND REGULATIONS. ALL COMPONENTS SHALL BE PROPERLY GROUNDED AND BONDED PER NEC REQUIREMENTS (SECTION 250).
4. FURNISH AND INSTALL ALL REQUIRED PULL BOXES, JUNCTION BOXES AND DISCONNECT SWITCHES AS REQUIRED BY CODES. PROVIDE PULL BOXES OR PULLING TYPE CONDULETS AS REQUIRED TO CONFORM TO NEC. DETERMINE WHETHER TO USE A SINGLE PULL BOX, GROUP OF PULL BOXES OR PULLING CONDULETS BASED ON ACTUAL FIELD CONDITIONS AND AS APPROVED BY THE ENGINEER.
5. ALL CONDUITS SHALL CONTAIN AN INSULATED GROUND WIRE BONDED TO ALL ENCLOSURES AND SIZED IN ACCORDANCE WITH THE REQUIREMENTS OF THE NEC OR AS SHOWN ON THE CONTRACT DRAWINGS.
6. PRIOR TO INSTALLATION, SUBMIT TO THE ENGINEER FOR APPROVAL DIMENSIONED INSTALLATION LAYOUTS.
7. ALL 600V GENERAL PURPOSE NORMAL POWER CABLE SHALL BE TYPE XHHW-2, XLP, LOW SMOKE ZERO HALOGEN (LSZH) JACKET, WITH NON-PVC INSULATION AND SHALL BE OF THE LOW SMOKE, LOW TOXICITY, NON HALOGEN AND VW-1 RATED, FLAME-RETARDANT TYPE CABLES AND SHALL CONFORM TO UL 44, IN PHENOLIC CONDUIT TYPE XW.
8. ALL UNUSED OPENINGS IN CONDUIT BOXES, CABINETS, PANELBOARDS ETC, SHALL BE CLOSED IN A MANNER APPROVED BY THE ENGINEER.
9. ALL CONDUIT OR WIREWAY PENETRATIONS THROUGH FIRE RATED WALLS AND FLOORS SHALL BE SEALED WITH APPROPRIATE FIRE STOPPING MECHANICAL SYSTEM. ALL VERTICAL SMOKE AND FIRE STOP FITTINGS SHALL BE 2-HOUR RATED.
10. UNLESS OTHERWISE NOTED, EQUIPMENT & MATERIALS TO BE FURNISHED AND INSTALLED SHALL BE NEW AND SHALL BEAR U.L. LISTING AND LABELING WHERE SUCH STANDARD HAS BEEN ESTABLISHED FOR THAT TYPE OF EQUIPMENT/MATERIAL.
11. FURNISH AND INSTALL TAGS FOR ALL CONDUITS, CABLE TRAYS, CABLES AND WIRING INSTALLED UNDER THIS CONTRACT. TAG IDENTIFICATIONS SHALL BE IN ACCORDANCE WITH THE CONTRACT DRAWINGS OR AS DIRECTED BY THE ENGINEER.
12. FURNISH AND INSTALL PULL BOXES, CONDUIT FITTINGS, CONDULETS, CONNECTORS, CLAMPS, HARDWARE, HANGERS, SUPPORTS, ETC. NECESSARY FOR A COMPLETE, CODE COMPLIANT, INSTALLATION EVEN IF NOT SHOWN ON THE CONTRACT DRAWINGS.
13. ALL SURFACES AND EQUIPMENT DAMAGED IN THE COURSE OF THE WORK SHALL BE RESTORED TO THE ORIGINAL CONDITION AT NO ADDTIONAL COST TO RIPTA.
14. PRIOR TO DRILLING THROUGH FLOORS AND WALLS, CHECK REFERENCE DRAWINGS FOR EXISTING CONDUITS/PIPES IN FLOOR SLABS & WALLS. X-RAY ALL AREAS WHERE CORE DRILLING IS REQUIRED TO AVOID CONFLICT WITH EXISTING EMBEDDED CONDUIT/PIPES OR REBARS.
15. UNLESS OTHERWISE INDICATED, ALL PULL/JUNCTION BOXES SHALL BE NEMA 4X, 316L SS. THE MINIMUM BOX SIZE SHALL BE 8"X8"X4".
16. THE ENTIRE INSTALLATION SHALL BE INSPECTED, THOROUGHLY CLEANED, AND DAMAGED FINISHES TOUCHED UP AFTER FINAL COMPLETION AND PRIOR TO COMMISSIONING. PERFORM FIELD TESTS IN ACCORDANCE WITH MANUFACTURERS' RECOMMENDATIONS, APPLICABLE STANDARDS AND AS DIRECTED BY THE ENGINEER FOR PROPER OPERATIONAL AND FUNCTIONAL PERFORMANCE.
17. ALL CONDUITS INSTALLED EXPOSED AND/OR VISIBLE WITHIN THE TUNNELS MUST MATCH AND FOLLOW THE TUNNEL CONTOURS AND SHAPES. THE CONDUIT INSTALLATION MAY REQUIRE MULTIPLE FIELD FABRICATED CONDUIT SEGMENTS, OFFSETS, AND/OR BENDS TO MATCH THE TUNNEL CONTOURS AND SHAPES. THE CONTRACTOR SHALL NOT ASSUME THAT THE USE OF MANUFACTURED CONDUIT ELBOWS AND OFFSETS WILL ALLOW THE CONDUIT INSTALLATION TO MATCH THE TUNNEL CONTOURS AND SHAPES.
18. THESE PLANS REFLECT CONDITIONS KNOWN DURING PLAN DEVELOPMENT. IN THE EVENT ACTUAL PHYSICAL CONDITIONS PREVENT THE APPLICATION OR THE PROGRESSION OF ANY WORK SPECIFIED IN THESE PLANS, NOTIFY THE ENGINEER IMMEDIATELY AND PRIOR TO ANY FURTHER WORK ACTIVITY.
19. THE WORK CORRIDOR SHALL BE RESTORED TO PRE-WORK CONDITIONS.
20. FOR ALL OVERHEAD SIGN STRUCTURES, EXERCISE ALL APPROPRIATE SAFETY MEASURES WHEN WORKING IN OR AROUND THESE AREAS. CAUTION SHALL BE TAKEN WITH RESPECT TO MAINTAINING THE POWER FEED AND GROUNDING CIRCUITRY. ALL FEATURES SHALL BE RESTORED TO ORIGINAL PRE-WORK CONDITION.
21. PULLING INSTRUCTIONS FOR POWER CONDUCTORS: CONNECT PULLING DEVICES TO COPPER WIRE AND NOT JACKET AND MEET MANUFACTURERS' REQUIREMENTS. USE PULLING COMPOUND PER MANUFACTURERS' REQUIREMENTS. ALL BENDS SHALL BE LESS THAN RECOMMENDED BY NEC OR NESC FOR CABLE USED.
22. ALL ELECTRICAL EQUIPMENT SHALL BE U.L. WEATHER RESISTANT. WEATHER RESISTANT EQUIPMENT SHALL BE 316 STAINLESS STEEL. ENCLOSURES SHALL BE NEMA 4X, 316 STAINLESS STEEL.
23. COLOR CODE ALL WIRING: BLACK-RED-BLUE-WHITE FOR 208Y/120V AND BROWN-ORANGE-YELLOW-GRAY FOR 480Y/277V. WIRES SHALL BE LABELED AT EACH END, INDICATING CIRCUIT NUMBERS.
24. SUPPORT EACH LUMINAIRE INDEPENDENTLY PER DRAWING DETAILS AND CODES, COORDINATE LOCATIONS WITH ALL OTHER TRADES TO AVOID CONFLICT.
25. CIRCUIT NUMBERS INDICATE PANEL AND CIRCUIT BREAKER FOR EQUIPMENT CONNECTIONS. IT SHALL BE THE CONTRACTOR'S RESPONSIBILITY TO INSTALL ALL REQUIRED WIRING PER THE LATEST ADOPTED EDITION OF THE NEC, RIPTA AND PROJECT SPECIFICATIONS TO PROPERLY ENERGIZE THE ELECTRICAL SYSTEM.
26. WHERE THE NUMBER OF CURRENT CARRYING CONDUCTORS IN A RACEWAY OR CABLE EXCEEDS THREE, THE ALLOWABLE AMPACITY SHALL BE REDUCED PER NATIONAL ELECTRIC CODE TABLE BASED ON NO DIVERSITY, CONSIDER NEUTRALS TO BE CURRENT CARRYING CONDUCTORS.
27. BRANCH CIRCUITS SHALL NOT USE A COMMON NEUTRAL. ALL CIRCUITS SHALL HAVE A MINIMUM CONDUCTOR SIZE OF #12 AWG UNLESS NOTED OTHERWISE.
28. CONDUIT RUNS SHALL NOT EXCEED 270° DEGREES OF BENDS BETWEEN MANHOLES OR JUNCTION BOXES.
29. ALL CONDUITS SHALL HAVE A 200 LB. PULL ROPE INSTALLED. ALL EMPTY (SPARE) CONDUITS SHALL BE CAPPED WITH BLACK DUCT PLUGS AND FURNISHED WITH A PULL ROPE FOR FUTURE USE.
30. CONTRACTOR SHALL MEGGER EACH CABLE OR WIRE AFTER PULLING CABLE THROUGH CONDUIT AND PRIOR TO TERMINATION. RESULTS SHALL BE SUBMITTED TO RIPTA FOR APPROVAL.

TUNNEL LUMINAIRE MONITORING AND CONTROL REQUIREMENTS

1. LUMINAIRE SHALL BE MONITORED AND CONTROLLED WITH AN INTEGRATED POWER-LINE CARRIER DIMMING CONTROL SYSTEM. THE TLACS-U SYSTEM SHALL UTILIZE A UDE INTEGRATED CONTROL CABINET USED FOR SMALL TUNNELS TO PROVIDE UP TO 12 STAGES OF DIMMING/SWITCHING THROUGH LOCAL PRODUCT CONTROLLERS (LPC) LOCATED WITHIN EACH LUMINAIRE. UDE SHALL SUPPORT TWO LUMINANCE SENSORS LOCATED AT EITHER END OF THE TUNNEL.

DEMOLITION

1. THE REMOVAL AND DISPOSAL OF THE EXISTING TUNNEL LIGHTING SYSTEM SHALL INCLUDE LUMINAIRES, CONDUIT, MOUNTING HARDWARE, UNISTRUT AND SUPPORT ASSEMBLY, LAMPS, BALLASTS AND ASSOCIATED WIRING BACK TO FEEDER PANEL BOARD LOCATED IN THE ELECTRICAL ROOM AT THE WEST END OF THE TUNNEL.
2. IN THE EVENT ANY ITEMS CONTAIN HAZARDOUS MATERIAL, THEY SHALL BE DISPOSED OF PER REGULARTORY GUIDELINES.
3. DEMOLISHED COPPER AND METALS FROM DEMOLITION WORK SHALL BE SCRAPPED AND CREDITED TO RIPTA AND THIS PROJECT.
4. RECORD DRAWINGS ARE FOR INFORMATION ONLY. VERIFYING EXACT LUMINAIRE TYPES AND QUANTITIES ARE THE RESPONSIBILITY OF THE CONTRACTOR.

ABBREVIATIONS

A	AMPERE
AC	ALTERNATING CURRENT
AFF	ABOVE FINISHED FLOOR
APPROX	APPROXIMATE
ATS	AUTOMATIC TRANSFER SWITCH
AWG	AMERICAN WIRE GAGE
BKR	BREAKER
BLDG	BUILDING
C	CONDUIT
C & C	CUT & COVER
CB	CIRCUIT BREAKER
CKT	CIRCUIT
CMU	CONCRETE MASONRY UNIT
CONC	CONCRETE
COND	CONDUCTORS
CU	COPPER
DIA	DIAMETER
DISC	DISCONNECT
DP	DISTRIBUTION PANEL
DWG	DRAWING
EB	EASTBOUND
ENET	ETHERNET
EXIST	EXISTING
FRE	HEAVY WALL FIBERGLASS RE-INFORCED EPOXY CONDUIT
GALV	GALVANIZED
GFCI	GROUND FAULT CIRCUIT INTERRUPTER
G/GND	GROUND
GTW	GATEWAY
HH	HANDHOLE
INCL	INCLUDED
INT	INTERIOR
IT	INFORMATION TECHNOLOGY
ITS	INTELLIGENT TRANSPORTATION SYSTEM
J/JB	JUNCTION BOX
KAIC	KILOAMPERE INTERRUPTING CAPACITY
KVA	KILOVOLT-AMPERE
LCB	LIGHTING CONTROL BOX
LCC	LIGHTING CONTROL CENTER
LED	LIGHT EMITTING DIODE
LFMC	LIQUIDTIGHT FLEXIBLE METAL CONDUIT
LPC	LOCAL PRODUCT CONTROLLER
LSZH	LOW SMOKE ZERO HALOGEN
LTG	LIGHTING
MA	MILLIAMPERE
MAX	MAXIMUM
MFR	MANUFACTURER
MH	MANHOLE
MIN	MINIMUM
NC	NORMALLY CLOSED
NEC	NATIONAL ELECTRIC CODE
NEU	NEUTRAL
NFPA	NATIONAL FIRE PROTECTION ASSOCIATION
NIC	NOT IN CONTRACT
NO.	NUMBER
NOS.	NUMBERS
N.T.S.	NOT TO SCALE
OCPD	OVERCURRENT PROTECTIVE DEVICE
PH	PHASE
PLM	PROGRAMMABLE LOGIC MACHINE
PMP	PUMP
PP	POWER PANEL (480Y/277V, 208Y/120V)
PVC	POLYVINYL CHLORIDE
QTY.	QUANTITY
RIPTA	RHODE ISLAND PUBLIC TRANSIT AUTHORITY
RECPT	RECEPTACLE
REQ'D	REQUIRED
RGS	RIGID GALVANIZED STEEL
RIO	REMOTE INPUT/OUTPUT
RTRC	REINFORCED THERMOSETTING RESIN CONDUIT
SMFOC	SINGLE MODE FIBER OPTIC CABLE
SS	STAINLESS STEEL
TB	TERMINAL BOX
TBR	TO BE REPLACED
TEL	TELEPHONE
TH	THRESHOLD
TR	TRANSITION
TRAN	TRANSVERSE
TWSP	TWISTED SHIELDED PAIRS
TYP	TYPICAL
UDE	UNDERPASS DIMMING ENCLOSURE
UL	UNDERWRITER'S LABORATORY
UNV	UNIVERSAL
UPS	UNINTERRUPTIBLE POWER SUPPLY
V	VOLT
VAC	VOLTS AC
VIF	VERIFY IN FIELD
W	WATTS
WB	WESTBOUND
WP	WEATHERPROOF
XMFR	TRANSFORMER

ELECTRICAL SYMBOLS

- FLEXIBLE CONNECTION TO EQUIPMENT
- PANELBOARD 208Y/120V (XXX)
- NORMAL / NIGHT JUNCTION BOX (J)
- PROPOSED NEW WORK
- EXISTING WORK
- TEMPORARY WORK
- DEMOLITION WORK
- PROPOSED NEW WORK (UNDERGROUND)
- GROUNDING
- CIRCUIT BREAKER
- GENERATOR (G)
- MANUAL TRANSFER SWITCH
- UTILITY METER (M)
- PHOTOCELL (PC)
- DUPLEX RECEPTACLE, GF= GROUND FAULT WP= WEATHER PROOF (GF WP)
- DISCONNECT

LIGHTING SYMBOLS

- TYPE L1 LUMINAIRE
- TYPE L2 LUMINAIRE
- TYPE L3 LUMINAIRE
- TYPE L4 LUMINAIRE
- LUMINANCE METER

WSP USA INC.
100 SUMMER STREET, 13TH FLOOR
BOSTON, MA. 02110
166 VALLEY STREET, BUILDING 5,
PROVIDENCE, RI 02909
WWW.WSP.COM

RHODE ISLAND PUBLIC TRANSIT AUTHORITY

RHODE ISLAND
PUBLIC TRANSIT AUTHORITY

SCALE: NOT TO SCALE

REVISIONS			REVISIONS		
NO.	DATE	BY	NO.	DATE	BY

EAST SIDE TUNNEL REHABILITATION

PROVIDENCE RHODE ISLAND

LIGHTING LEGEND, ABBREVIATIONS AND GENERAL NOTES

DESIGNED BY: JRF
CHECKED BY: DMM
DATE: 06/30/2023
PLAN NO.: E-01
SHEET: 63 OF: 81

LIGHTNOTE1.dwg

NOTES:

1. REFER TO SHEET E-01 FOR LEGEND, ABBREVIATIONS AND GENERAL NOTES.
2. LUMINAIRE QUANTITIES SHOWN ARE FOR THIS SHEET ONLY.
3. REFER TO SHEET E-08 AND E-09 FOR LUMINAIRE AND LUMINANCE METER DETAILS.

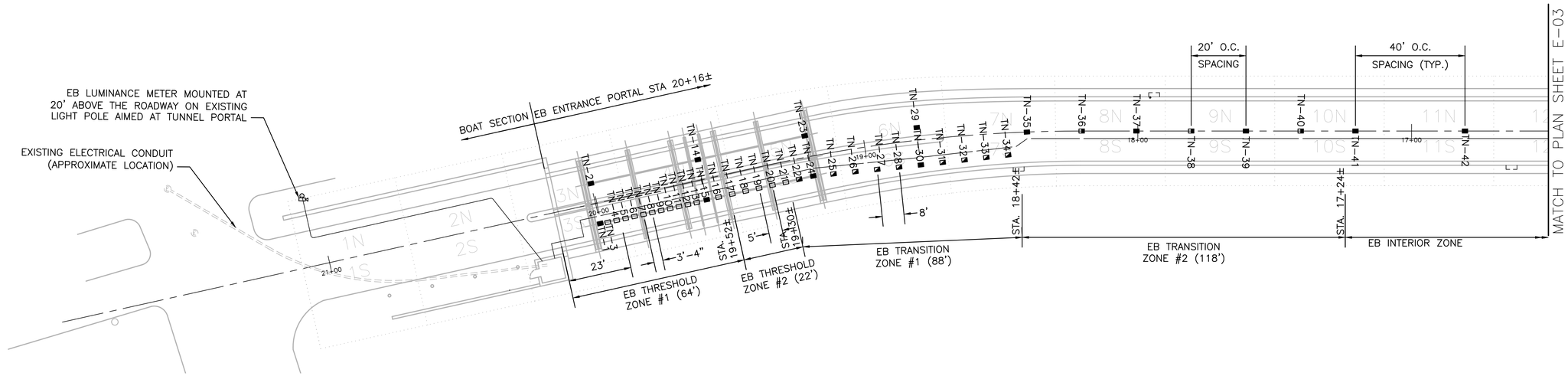

LIGHTING LAYOUT

LEGEND

- ■ TYPE L1 LUMINAIRE QTY = 13
- □ TYPE L2 LUMINAIRE QTY = 17
- ◪ TYPE L3 LUMINAIRE QTY = 9
- ◨ TYPE L4 LUMINAIRE QTY = 3

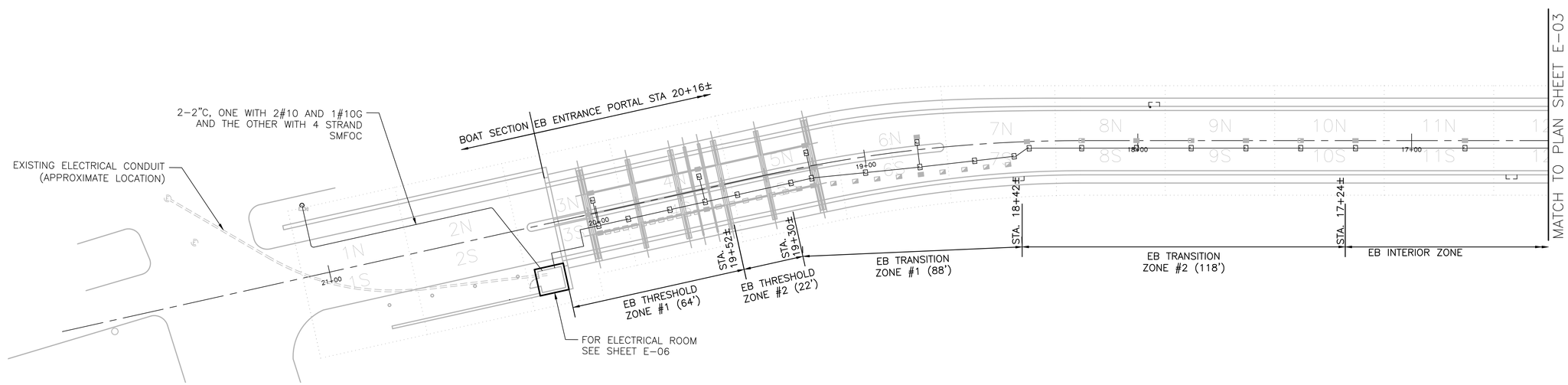

CONDUIT AND JUNCTION BOX LAYOUT

WSP USA INC.
100 SUMMER STREET, 13TH FLOOR
BOSTON, MA. 02110
166 VALLEY STREET, BUILDING 5,
PROVIDENCE, RI 02909
WWW.WSP.COM

RHODE ISLAND PUBLIC TRANSIT AUTHORITY

SCALE: 1"=20'

REVISIONS			REVISIONS		
NO.	DATE	BY	NO.	DATE	BY

EAST SIDE TUNNEL REHABILITATION

PROVIDENCE RHODE ISLAND

LIGHTING PLAN 1

DESIGNED BY: JRF
CHECKED BY: DMM
DATE: 06/30/2023
PLAN NO.: E-02
SHEET: 64 OF: 81

LIGHTING001.dwg

NOTES:

1. REFER TO SHEET E-01 FOR LEGEND, ABBREVIATIONS AND GENERAL NOTES.
2. LUMINAIRE QUANTITIES SHOWN ARE FOR THIS SHEET ONLY.
3. REFER TO SHEET E-08 AND E-09 FOR LUMINAIRE AND LUMINANCE METER DETAILS.

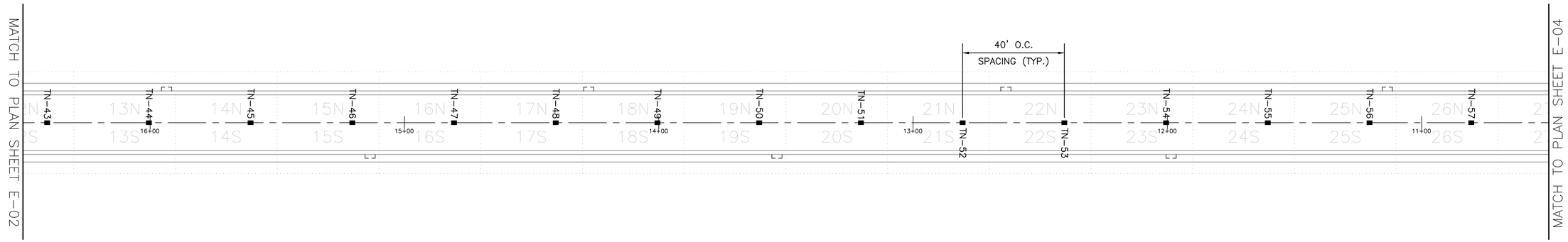

LIGHTING LAYOUT

LEGEND

- ■ TYPE L1 LUMINAIRE QTY = 15
- □ TYPE L2 LUMINAIRE QTY = 0
- ◪ TYPE L3 LUMINAIRE QTY = 0
- ◨ TYPE L4 LUMINAIRE QTY = 0

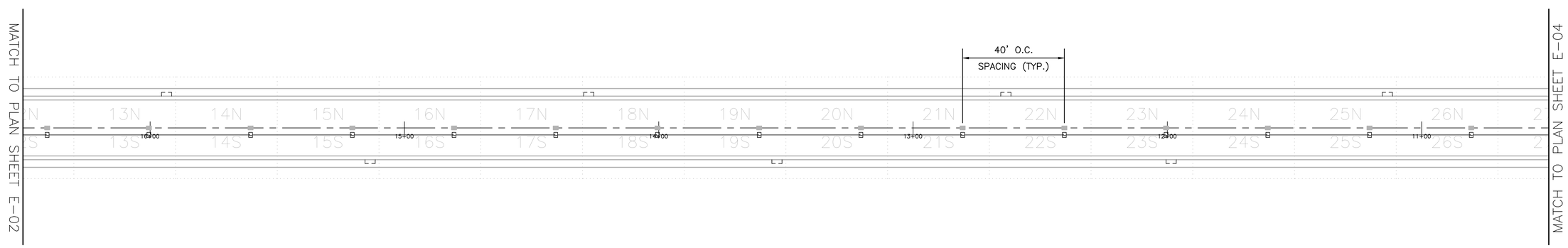

CONDUIT AND JUNCTION BOX LAYOUT

WSP USA INC.

100 SUMMER STREET, 13TH FLOOR
BOSTON, MA. 02110

166 VALLEY STREET, BUILDING 5,
PROVIDENCE, RI 02909

WWW.WSP.COM

RHODE ISLAND PUBLIC TRANSIT AUTHORITY

RHODE ISLAND
PUBLIC TRANSIT AUTHORITY

SCALE: 1"=20'

GRAPHIC SCALE

REVISIONS			REVISIONS		
NO.	DATE	BY	NO.	DATE	BY

EAST SIDE TUNNEL REHABILITATION

PROVIDENCE RHODE ISLAND

LIGHTING PLAN 2

DESIGNED BY: JRF
CHECKED BY: DMM
DATE: 06/30/2023
PLAN NO.: E-03
SHEET: 65 OF: 81

LIGHTING002.dwg

NOTES:

1. REFER TO SHEET E-01 FOR LEGEND, ABBREVIATIONS AND GENERAL NOTES.
2. LUMINAIRE QUANTITIES SHOWN ARE FOR THIS SHEET ONLY.
3. REFER TO SHEET E-08 AND E-09 FOR LUMINAIRE AND LUMINANCE METER DETAILS.

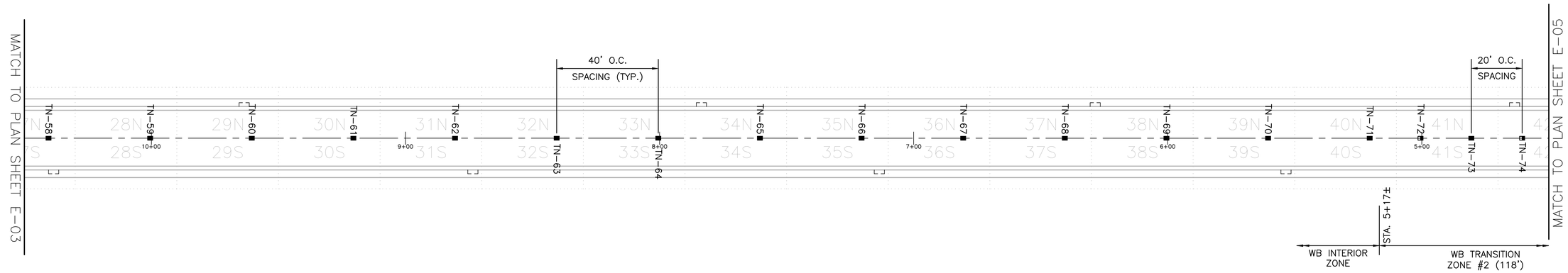

LIGHTING LAYOUT

LEGEND

- ■ TYPE L1 LUMINAIRE QTY = 15
- □ TYPE L2 LUMINAIRE QTY = 0
- ◪ TYPE L3 LUMINAIRE QTY = 0
- ◨ TYPE L4 LUMINAIRE QTY = 2

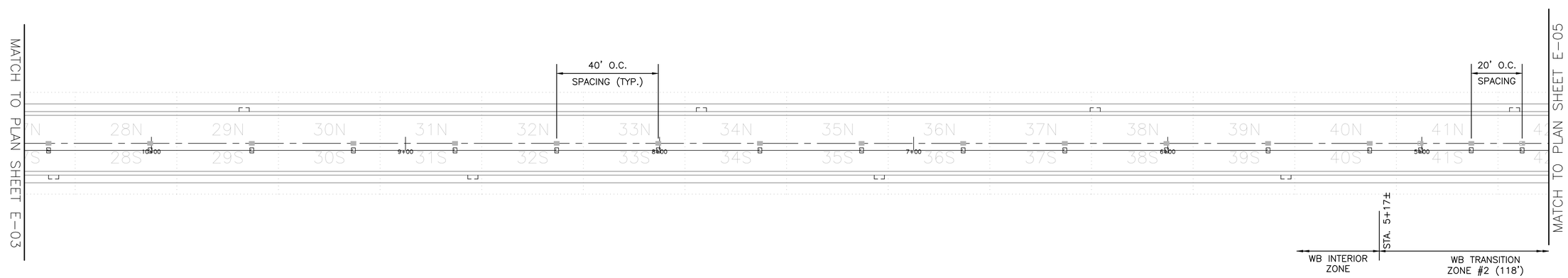

CONDUIT AND JUNCTION BOX LAYOUT

WSP USA INC.
100 SUMMER STREET, 13TH FLOOR
BOSTON, MA. 02110
166 VALLEY STREET, BUILDING 5,
PROVIDENCE, RI 02909
WWW.WSP.COM

RHODE ISLAND PUBLIC TRANSIT AUTHORITY

RHODE ISLAND
PUBLIC TRANSIT AUTHORITY

SCALE: 1"=20'

GRAPHIC SCALE

REVISIONS			REVISIONS		
NO.	DATE	BY	NO.	DATE	BY

EAST SIDE TUNNEL REHABILITATION

PROVIDENCE RHODE ISLAND

LIGHTING PLAN 3

DESIGNED BY: JRF
CHECKED BY: DMM
DATE: 06/30/2023
PLAN NO.: E-04
SHEET: 66 OF: 81

LIGHTING003.dwg

NOTES:

1. REFER TO SHEET E-01 FOR LEGEND, ABBREVIATIONS AND GENERAL NOTES.
2. LUMINAIRE QUANTITIES SHOWN ARE FOR THIS SHEET ONLY.
3. REFER TO SHEET E-08 AND E-09 FOR LUMINAIRE AND LUMINANCE METER DETAILS.

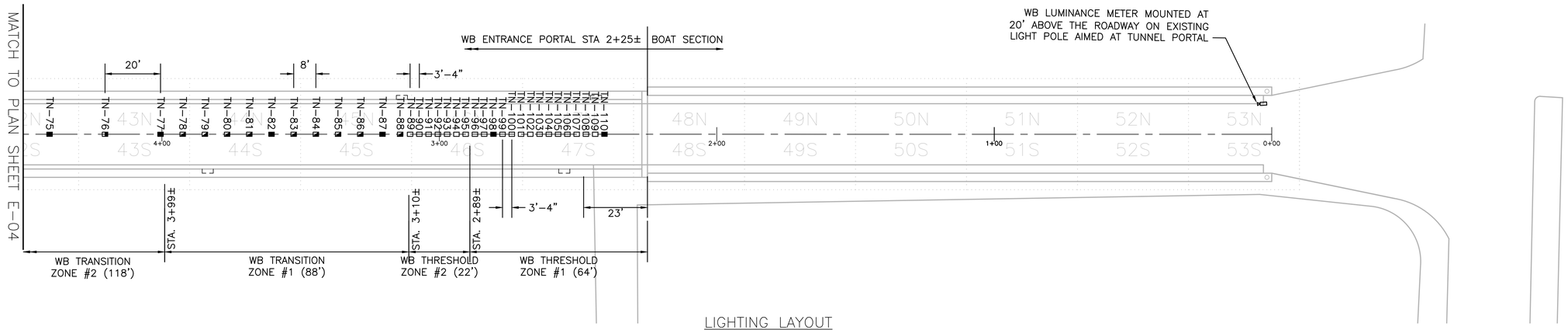

LIGHTING LAYOUT

LEGEND

- ■ TYPE L1 LUMINAIRE QTY = 6
- □ TYPE L2 LUMINAIRE QTY = 20
- ◪ TYPE L3 LUMINAIRE QTY = 9
- ◨ TYPE L4 LUMINAIRE QTY = 1

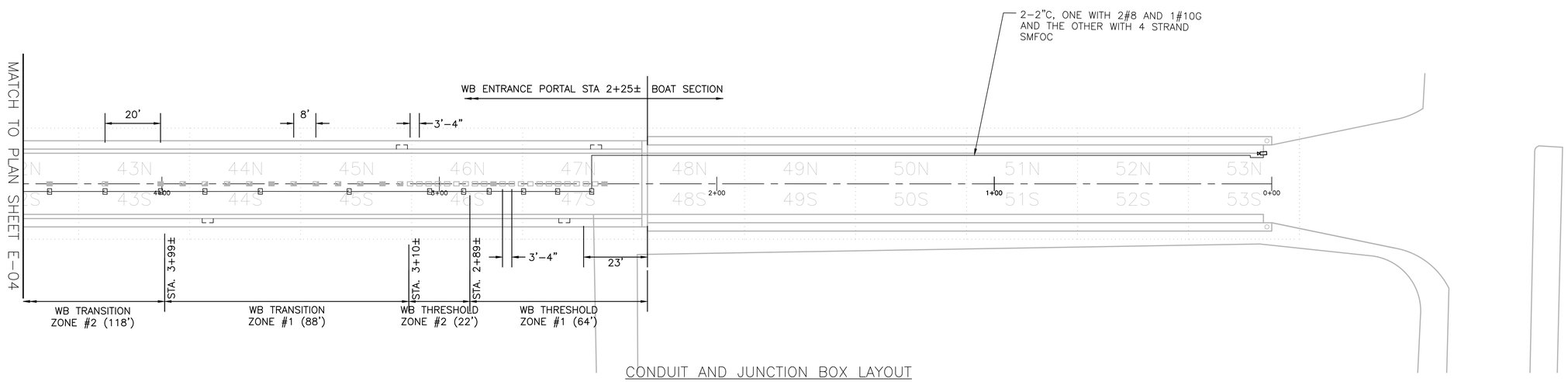

CONDUIT AND JUNCTION BOX LAYOUT

WSP USA INC.
100 SUMMER STREET, 13TH FLOOR
BOSTON, MA. 02110
166 VALLEY STREET, BUILDING 5,
PROVIDENCE, RI 02909
WWW.WSP.COM

RHODE ISLAND PUBLIC TRANSIT AUTHORITY

RHODE ISLAND
PUBLIC TRANSIT AUTHORITY

SCALE: 1"=20'

GRAPHIC SCALE

REVISIONS			REVISIONS		
NO.	DATE	BY	NO.	DATE	BY

EAST SIDE TUNNEL REHABILITATION

PROVIDENCE RHODE ISLAND

LIGHTING PLAN 4

DESIGNED BY: JRF
CHECKED BY: DMM
DATE: 06/30/2023
PLAN NO.: E-05
SHEET: 67 OF: 81

LIGHTING004.dwg

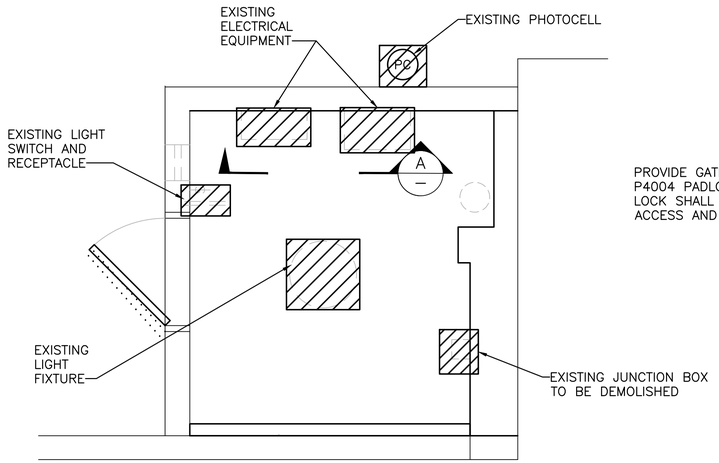

NOTE:
DEMOLISH ALL EXISTING ELECTRICAL AND LIGHTING CONDUIT, CABLING, EQUIPMENT AND SUPPORTS.

ELECTRICAL ROOM PLAN
EXISTING CONDITION
N.T.S.

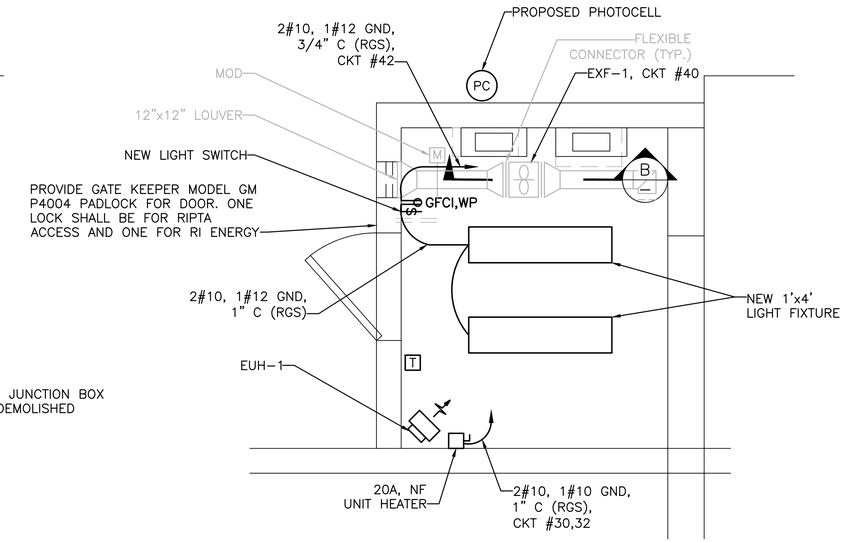

ELECTRICAL ROOM PLAN
PROPOSED CONDITION
N.T.S.

SHEET NOTES:

1. EXPANSION FITTING SHALL INSTALLED WITHIN ALL CONDUIT RUNS GREATER THAN 35' BETWEEN JUNCTION BOXES.
2. ALIGNMENT/EXPANSION FITTINGS SHALL BE USED FOR EACH CONDUIT AT ALL TUNNEL JOINTS. REFER TO STRUCTURAL PLANS FOR LOCATIONS OF TUNNEL JOINTS.

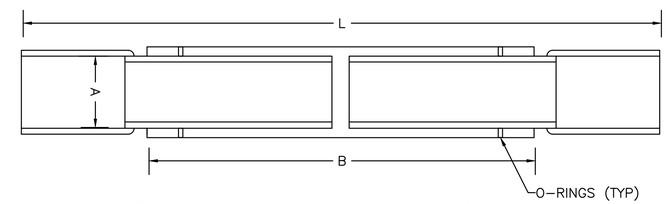

NOTE:
EXPANSION FITTING SHALL BE SET BASED ON AMBIENT TEMPERATURE AT TIME OF INSTALLATION

A = 2"
B = 17"
L = 29" MIN. / 45" MAX.

RTRC PHENOLIC CONDUIT DOUBLE EXPANSION JOINT WITH O-RING
N.T.S.

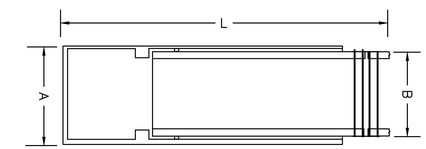

NOTE:
FITTING SHALL BE SET BASED ON AMBIENT TEMPERATURE AT TIME OF INSTALLATION

A = 3"
B = 2.5"
L = 37" MIN. / 51" MAX.

RTRC PHENOLIC CONDUIT ALIGNMENT/EXPANSION FITTING
N.T.S.

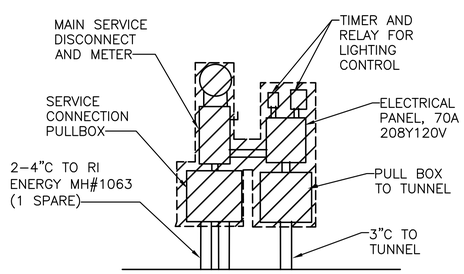

SECTION A: EXISTING CONDITIONS
N.T.S.

DEMOLITION NOTES:

1. DEMOLISH EXISTING SERVICE CONNECTION PULL BOX, SERVICE DISCONNECT AND METER.
2. DEMOLISH EXISTING PANELBOARD AND LIGHTING CONTROL AND PULL BOX TO TUNNEL AND ASSOCIATED CONDUITS.
3. DEMOLISH SERVICE ENTRANCE BACK TO NEAREST RI ENERGY MANHOLE.

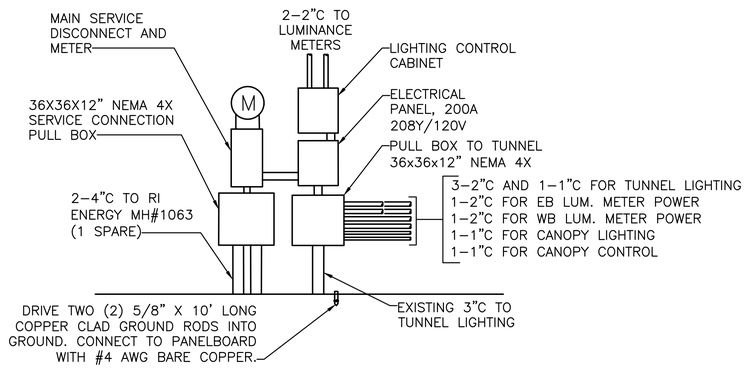

SECTION B: PROPOSED CONDITIONS
N.T.S.

NEW WORK NOTES:

1. SERVICE CONNECTION PULL BOX SHALL BE NEMA 3R RATED WITH LOCKING PROVISIONS FOR RI ENERGY.
2. NEW DISCONNECT SHALL BE RATED 100kAIC.
3. NEW PANELBOARD SHALL BE 200A, 208Y/120V.
4. INSTALL NEW PULL 36X36X12" BOX TO TUNNEL LIGHTING.
5. INSTALLATION SHALL COMPLY WITH RI ENERGY SPECIFICATIONS FOR ELECTRICAL INSTALLATIONS, LATEST, EDITION (ESB 757 AS OF JUNE 2022).
6. ROUTE NEW SERVICE CONDUCTORS IN EXISTING CONDUIT.

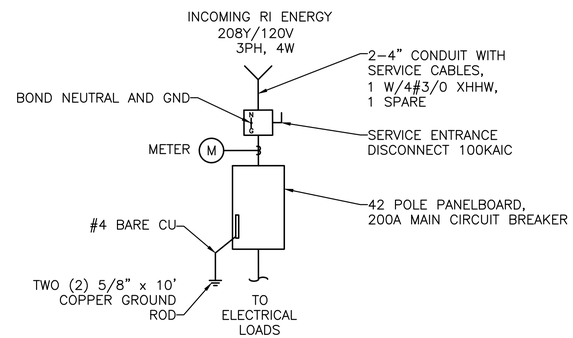

PROPOSED ELECTRICAL ONE LINE DIAGRAM
N.T.S.

WSP USA INC.
100 SUMMER STREET, 13TH FLOOR
BOSTON, MA. 02110
166 VALLEY STREET, BUILDING 5,
PROVIDENCE, RI 02909
WWW.WSP.COM

RHODE ISLAND PUBLIC TRANSIT AUTHORITY

RHODE ISLAND
PUBLIC TRANSIT AUTHORITY

REVISIONS			REVISIONS		
NO.	DATE	BY	NO.	DATE	BY

EAST SIDE TUNNEL REHABILITATION
PROVIDENCE RHODE ISLAND

LIGHTING DETAILS 1

DESIGNED BY: JRF
CHECKED BY: DMM
DATE: 06/30/2023
PLAN NO.: E-06
SHEET: 68 OF: 81

LIGHTDETL1.dwg

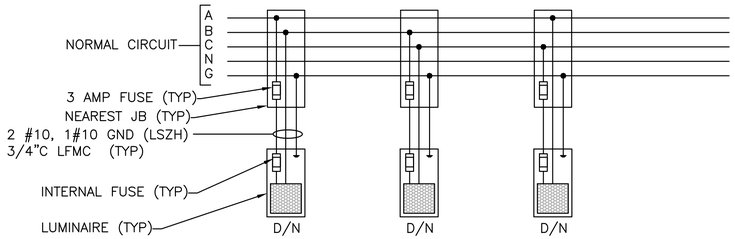

WIRING DIAGRAM
N.T.S.

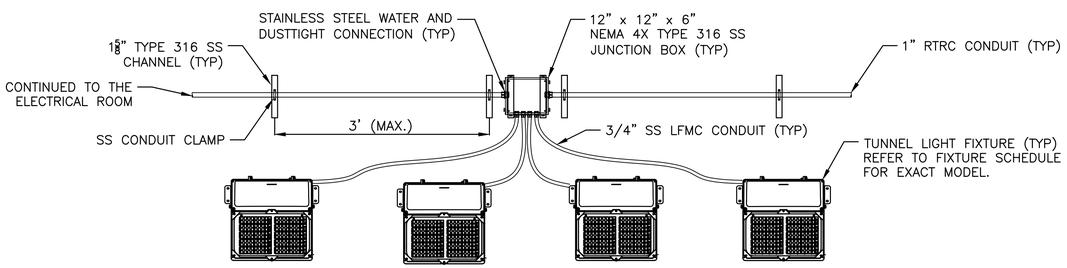

EB THRESHOLD AND TRANSITION ZONES
N.T.S.

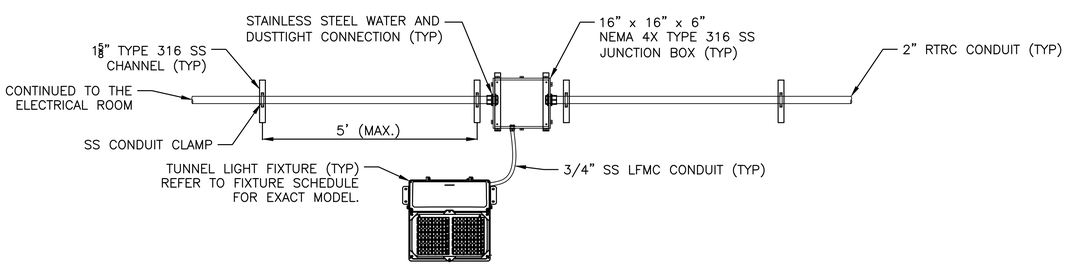

INTERIOR ZONE
N.T.S.

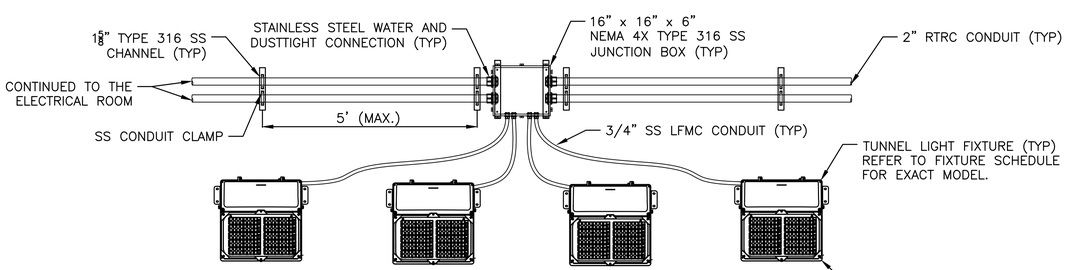

WB THRESHOLD AND TRANSITION ZONES
N.T.S.

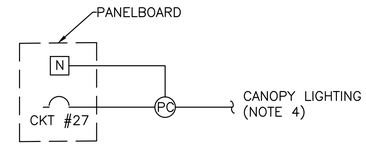

CANOPY LIGHTING CONTROL
N.T.S.

NOTES:

1. FOR ELECTRICAL NOTES SEE SHEET E–01.
2. MAX LFMC LENGTH SHALL BE 6'.
3. NUMBER OF FIXTURES FED FROM A SINGLE JUNCTION BOX VARIES BY LIGHTING ZONE AND LOCATION WITHIN LIGHTING ZONE.
4. FOR CANOPY LIGHTING LAYOUT, SEE CEILING PLAN ON SHEET A–06.

RIPTA TUNNEL CONDUIT AND CABLE SCHEDULE

ZONE	APPROXIMATE FIXTURE LOCATIONS		CABLE FROM PANELBOARD TO FIRST	CABLE BETWEEN	FIXTURE NUMBER		CONDUIT	
	FROM STATION	TO STATION	FIXTURE IN CIRCUIT	FIXTURES	FIRST	LAST	SIZE	TAG
EB N	20+16	17+24	3#10 AWG	3#10 AWG	TN-1	TN-39	1"	EB - 1
EB TH	20+16	19+30	3#10 AWG	3#10 AWG	TN-3	TN-21		
EB TR	19+30	17+24	3#10 AWG	3#10 AWG	TN-22	TN-40		
INT - ODDS	17+24	5+17	3#4 AWG	3#4 AWG	TN-41	TN-71	2"	INT - 1
INT - EVENS	17+24	5+17	3#4 AWG	3#4 AWG	TN-42	TN-70		
WB TR 2	5+17	4+00	3#8 AWG	3#10 AWG	TN-72	TN-76	2"	WB - 1
WB TR 1	4+00	3+10	3#2 AWG	3#8 AWG	TN-78	TN-88		
WB TH 2	3+10	2+89	3#2 AWG	3#8 AWG	TN-89	TN-94		
WB TH 1	2+89	2+25	3#2 AWG	3#8 AWG	TN-95	TN-100		
WB TH 1	2+89	2+25	3#2 AWG	3#8 AWG	TN-101	TN-105	2"	WB - 2
WB TH 1	2+89	2+25	3#2 AWG	3#8 AWG	TN-106	TN-109		
WB N	5+17	2+25	3#6 AWG	3#6 AWG	TN-73	TN-110		
WB-LUM	-	-	2#8, #10 GND / 4 STRAND SMFOC	-	-	-	2-1"	LUM-WB
EB-LUM	-	-	2#10, #12 GND / 4 STRAND SMFOC	-	-	-	2-2"	LUM-EB
CANOPY LGT	-	-	2#10, #12 GND	2#10, #12 GND	-	-	1-1"	CAN-1
CANOPY CNTL	-	-	6#14, 1#14 GND	-	-	-	1-1"	CAN-2
LCC	-	-	2#12, #12 GND	-	-	-	1-1"	LCC

RIPTA TUNNEL LOAD CENTER

3 PH 4 WIRE — VOLTAGE L-L: 208 — L-N: 120 — MAIN: 200A MCB — MIN. KAIC 10kAIC

LOCATION: ELECTRICAL ROOM — MOUNTING: SURFACE

CKT#	BKR.	POLE	DESCRIPTION	VOLT-AMP	PHASE A	PHASE B	PHASE C	VOLT-AMP	DESCRIPTION	POLE	BKR.	CKT#
1	30A	2	EB PORTAL THRESHOLD	2030	2755			725	WB PORTAL THRESHOLD #1	2	20A	2
3				2030		2755		725				4
5	20A	2	EB TRANSITION	1150			1875	725	WB PORTAL THRESHOLD #2	2	20A	6
7				1150	1875			725				8
9	20A	2	EB PORTAL - NIGHT	660		1385		725	WB PORTAL THRESHOLD #3	2	20A	10
11				660			1385	725				12
13	20A	2	INTERIOR - EVENS	960	1685			725	WB PORTAL THRESHOLD #4	2	20A	14
15				960		1685		725				16
17	20A	2	INTERIOR - ODDS	900			1725	825	WB PORTAL TRANSITION #1	2	20A	18
19				900	1725			825				20
21	20A	1	EB LUMINANCE METER	200		380		180	WB PORTAL TRANSITION #2	2	20A	22
23	20A	1	WB LUMINANCE METER	200			380	180				24
25	20A	1	LIGHTING CONTROL CABINET	500	920			420	WB PORTAL - NIGHT	2	20A	26
27	20A	1	CANOPY LIGHTING	250		670		420				28
29	20A	1	SPARE	0			1500	1500	ELECTRICAL ROOM HEATER	2	20A	30
31	20A	1	SPARE	0	1500			1500				32
33	20A	1	SPARE	0		0		0	SPARE	1	20A	34
35	20A	1	SPARE	0			0	0	SPARE	1	20A	36
37	20A	1	SPARE	0	0			0	SPARE	1	20A	38
39	20A	1	SPARE	0		700		700	ELECTRICAL ROOM EXHAUST FAN	1	20A	40
41	20A	1	SPARE	0			360	360	ELECTRICAL ROOM RECEPTACLES	1	20A	42
			TOTAL LOAD(VA)/PHASE THIS PANEL:		10460	7575	7225					

TOTAL CONNECTED LOAD(VA): 25260 — TOTAL CONNECTED LOAD (AMPS): 70
HIGH PHASE LOAD (VA): 10460 — HIGH PHASE LOAD (AMPS): 87

NOTES:
1. Contractor shall balance loads evenly across all three phases.
2. Panelboard shall include integral Surge Protection Device (SPD).

WSP USA INC.
100 SUMMER STREET, 13TH FLOOR
BOSTON, MA. 02110
166 VALLEY STREET, BUILDING 5,
PROVIDENCE, RI 02909
WWW.WSP.COM

RHODE ISLAND PUBLIC TRANSIT AUTHORITY

RHODE ISLAND
PUBLIC TRANSIT AUTHORITY

REVISIONS			REVISIONS		
NO.	DATE	BY	NO.	DATE	BY

EAST SIDE TUNNEL REHABILITATION
PROVIDENCE — RHODE ISLAND

LIGHTING DETAILS 2

DESIGNED BY: JRF
CHECKED BY: DMM
DATE: 06/30/2023
PLAN NO.: E–07
SHEET: 69 OF: 81

LIGHTDETL2.dwg

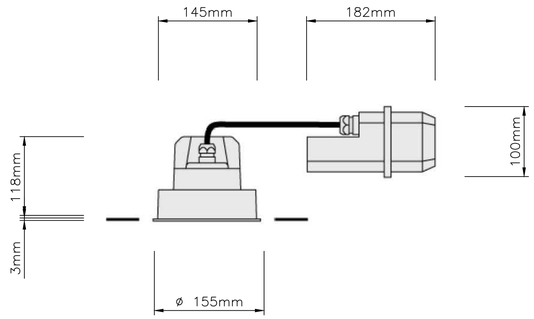

BUS SHELTER TYPES B1

N.T.S

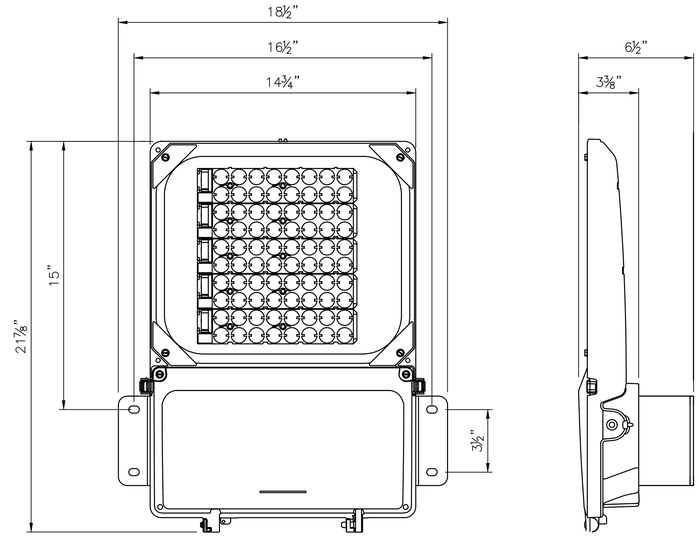

TUNNEL TYPES L1, L3 & L4

SCALE: 3" = 1'-0"

NOTES:

1. REFER TO SHEET NO. E-01 FOR LIGHTING LEGEND, ABBREVIATIONS AND GENERAL NOTES.
2. LUMINAIRE SPACING AND TYPES WILL VARY DEPENDING ON ZONE. REFER TO PROPOSED TUNNEL LIGHTING PLAN SHEETS NOS. E-02-E-05 FOR LUMINAIRE LOCATIONS.
3. ALL CONDUIT CONNECTIONS TO LUMINAIRES AND JUNCTION BOXES SHALL BE RATED FOR WASH-DOWN AND BE TYPE 316 SS STAINLESS STEEL.
4. EACH LUMINAIRE SHALL HAVE ITS OWN IDENTIFIER LABEL THAT CORRESPONDS TO THE LUMINAIRE NUMBERS SHOWN ON THE PROPOSED TUNNEL LIGHTING PLANS. THE LABEL SUPPLIED SHALL BE PER THE TUNNEL LIGHTING SPECIAL PROVISIONS.
5. LUMINAIRE LANYARD ATTACHMENT SHALL BE INSTALLED ACCORDING TO MANUFACTURER'S INSTALLATION AND INSTRUCTION SHEET.

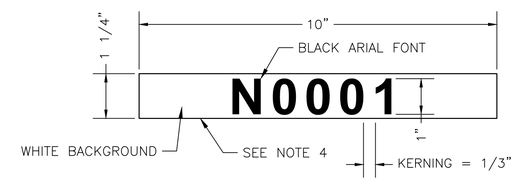

TYPICAL DETAIL – FIXTURE LABEL

SCALE: 6" = 1'-0"

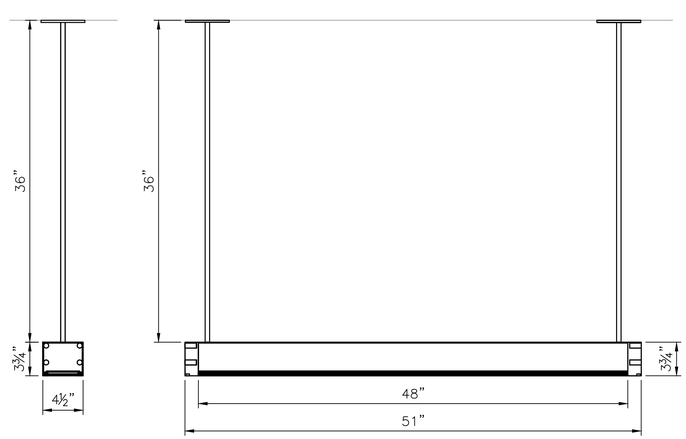

ELECTRICAL ROOM TYPES E1

SCALE: 1½" = 1'-0"

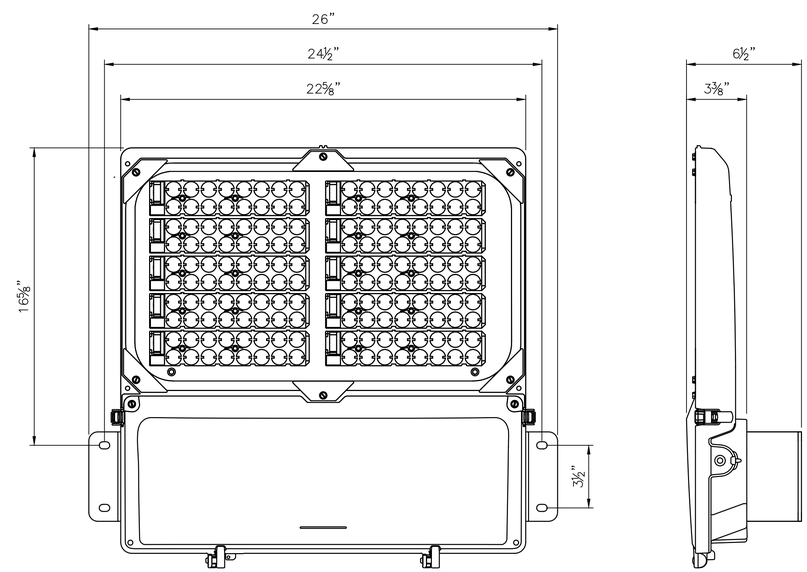

TUNNEL TYPE L2

SCALE: 3" = 1'-0"

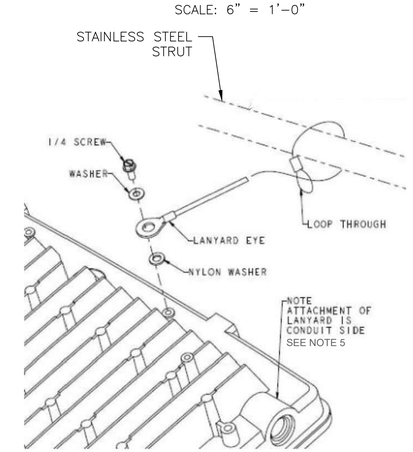

LUMINAIRE LANYARD ATTACHMENT DETAIL

SCALE: N.T.S.

WSP USA INC.

100 SUMMER STREET, 13TH FLOOR
BOSTON, MA. 02110

166 VALLEY STREET, BUILDING 5,
PROVIDENCE, RI 02909

WWW.WSP.COM

RHODE ISLAND PUBLIC TRANSIT AUTHORITY

RHODE ISLAND
PUBLIC TRANSIT AUTHORITY

SCALE: AS NOTED

REVISIONS			REVISIONS		
NO.	DATE	BY	NO.	DATE	BY

EAST SIDE TUNNEL REHABILITATION

PROVIDENCE RHODE ISLAND

LIGHTING DETAILS 3

DESIGNED BY: JRF
CHECKED BY: DMM
DATE: 06/30/2023
PLAN NO.: E-08
SHEET: 70 OF: 81

LIGHTDETL3.dwg

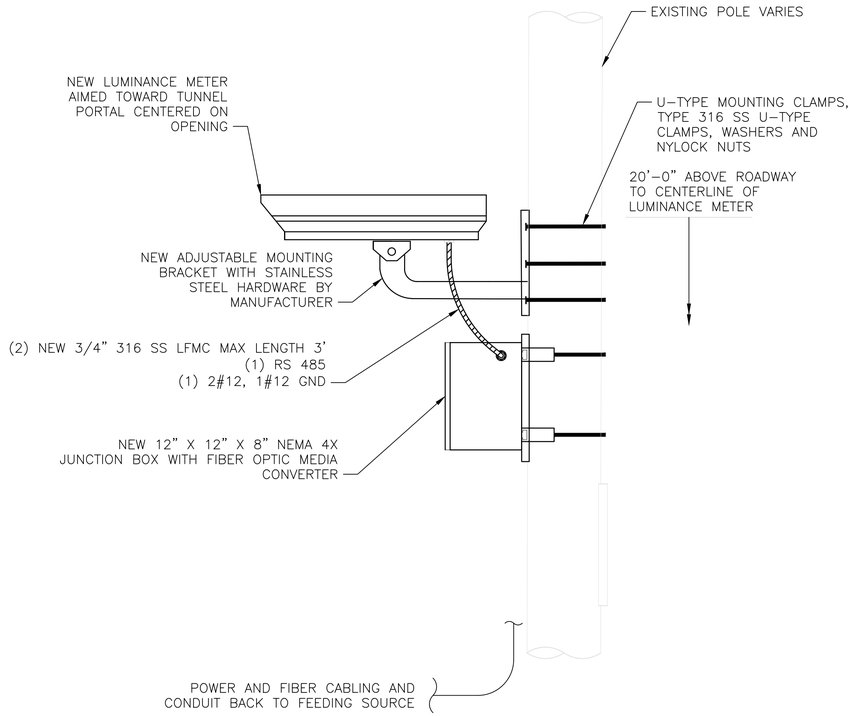

1 POLE MOUNTED LUMINANCE METER
SCALE : 1" = 1'-0"
L-02, L-05

NOTE:
CONTRACTOR SHALL PROVIDE A 12"x12"x8" NEMA 4X JUNCTION BOX WITHIN 3 FEET OF THE METER AND SHALL MAKE ALL NECESSARY CONNECTIONS IN THE BOX.

RIPTA TUNNEL LUMINAIRE SCHEDULE

SYM	TYPE	DESCRIPTION	INITIAL LUMENS	DISTRIBUTION	CORRELATED COLOR TEMPERATURE	QUANITITY
■	L1	LED LUMINAIRE - 102 WATTS - CEILING MOUNT	12,740	TYPE II	4000K	49
□	L2	LED LUMINAIRE - 246 WATTS - CEILING MOUNT	30,221	TYPE II	4000K	37
◪	L3	LED LUMINAIRE - 180 WATTS - CEILING MOUNT	19,781	TYPE II	4000K	18
◨	L4	LED LUMINAIRE - 102 WATTS - CEILING MOUNT	12,740	TYPE II	4000K	6

RIPTA TUNNEL LUMINAIRE QUANTITIES

LOCATION	LENGTH OF ZONE	STATION FROM	STATION TO	LUMINAIRE TYPE	LUMINAIRE QTY
EB THRESHOLD ZONE 1	64'	20+16	19+52	L1	4
				L2	12
EB THRESHOLD ZONE 2	22'	19+52	19+30	L2	5
EB TRANSITION ZONE 1	88'	19+30	18+42	L1	4
				L3	9
EB TRANSITION ZONE 2	118'	18+42	17+24	L1	3
				L4	3
INTERIOR ZONE	1386'	17+24	5+17	L1	31
WB TRANSITION ZONE 2	118'	3+99	5+17	L1	3
				L4	3
WB TRANSITION ZONE 1	88'	3+10	3+99	L1	2
				L3	9
WB THRESHOLD ZONE 2	22'	2+89	3+10	L2	7
WB THRESHOLD ZONE 1	64'	2+25	2+89	L1	2
				L2	13

NOTES:

1. REFER TO SHEET NO. E-01 FOR LIGHTING LEGEND, ABBREVIATIONS AND GENERAL NOTES.
2. LUMINAIRE SPACING AND TYPES WILL VARY DEPENDING ON ZONE. REFER TO PROPOSED TUNNEL LIGHTING PLAN SHEETS NOS. E-02-E-05 FOR LUMINAIRE LOCATIONS.
3. ALL CONDUIT CONNECTIONS TO LUMINAIRES AND JUNCTION BOXES SHALL BE WATER AND DUST TIGHT, NEMA 4X, TYPE 316 SS.
4. PLACEMENT OF NIPPLE TO BE CONFIRMED WITH RIPTA AND ENGINEER ON SITE.
5. DIMMING LEVELS LISTED AS % OF FULL LIGHT OUTPUT. 100% = FULL BRIGHTINESS.

SEE NOTE 5

RIPTA Tunnel

CONTROL GROUP	Dimming Levels										
	1	2	3	4	5	6	7	8	9	10	11
L1-1	100%	100%	100%	100%	100%	100%	100%	100%	100%	100%	100%
L2-1	0%	10%	20%	30%	40%	50%	60%	70%	80%	90%	100%
L3-1	0%	20%	29%	38%	47%	56%	64%	73%	82%	91%	100%
L4-1	0%	50%	56%	61%	67%	72%	78%	83%	90%	95%	100%

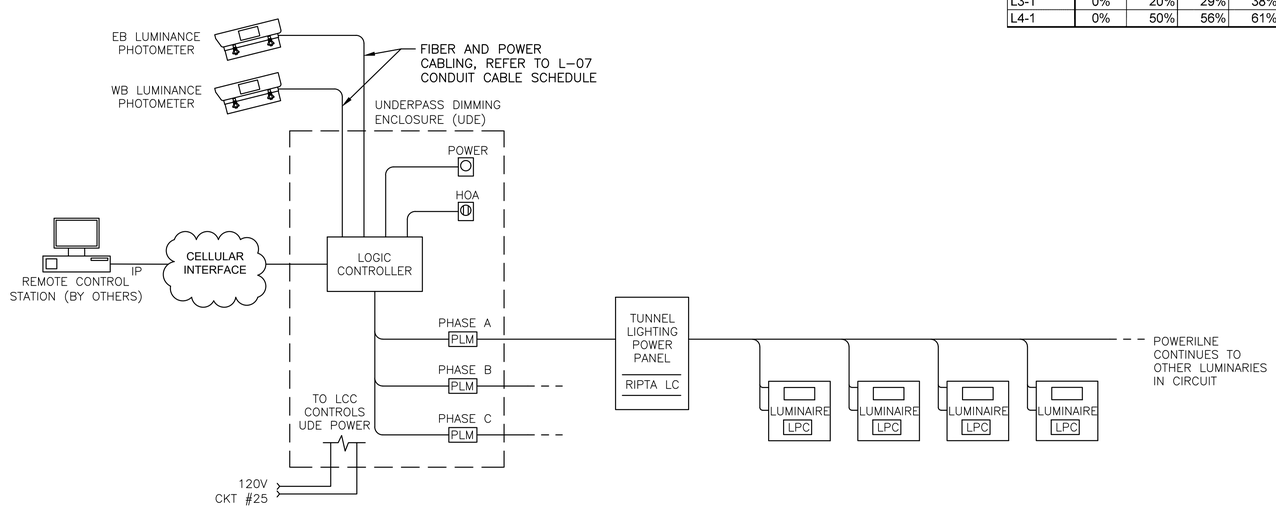

LIGHTING CONTROLS BLOCK DIAGRAM

WSP USA INC.
100 SUMMER STREET, 13TH FLOOR
BOSTON, MA. 02110
166 VALLEY STREET, BUILDING 5,
PROVIDENCE, RI 02909
WWW.WSP.COM

RHODE ISLAND PUBLIC TRANSIT AUTHORITY

RHODE ISLAND
PUBLIC TRANSIT AUTHORITY

REVISIONS			REVISIONS		
NO.	DATE	BY	NO.	DATE	BY

EAST SIDE TUNNEL REHABILITATION
PROVIDENCE RHODE ISLAND

LIGHTING DETAILS 4

DESIGNED BY: JRF
CHECKED BY: DMM
DATE: 06/30/2023
PLAN NO.: E-09
SHEET: 71 OF: 81

LIGHTDETL4.dwg

GENERAL NOTES

1. ALL PIPING AND EQUIPMENT IS SHOWN DIAGRAMMATICALLY AND EXACT LOCATIONS SHALL BE DETERMINED BY THE CONTRACTOR THROUGH COORDINATION WITH OTHER TRADES, ARCHITECTURAL ELEMENTS, LIGHTS, EQUIPMENT ETC, TO AVOID INTERFERENCES. CONTRACTOR SHALL SUBMIT COMPLETED COORDINATION DRAWINGS INCLUDING WORK OF OTHER TRADES, ARCHITECTURAL ELEMENTS, LIGHTS, EQUIPMENT ETC, FOR REVIEW PRIOR TO INSTALLATION OF PIPING, EQUIPMENT OR SYSTEM COMPONENTS.
2. VERIFY ALL LOCATIONS AND MEASUREMENTS IN THE FIELD AS FIELD CONDITIONS MAY VARY FROM DESIGN. CONTRACTOR SHALL VERIFY EXACT LOCATIONS IN THE FIELD BEFORE COMMENCING FABRICATION, ORDERING ANY MATERIAL, OR PERFORMING ANY WORK.
3. ANY DEPARTURE FROM THE DESIGN ON THE CONTRACT DRAWINGS SHALL BE SUBMITTED TO THE ENGINEER FOR APPROVAL.
4. THE TUNNEL FIRE SUPPRESSION SYSTEMS SHALL CONFORM TO THE REQUIREMENTS OF NFPA 502: STANDARD FOR ROAD TUNNELS, BRIDGES AND OTHER LIMITED ACCESS HIGHWAYS, NFPA 14: STANDARD FOR THE INSTALLATION OF STANDPIPE AND HOSE SYSTEMS, AND NFPA 25: STANDARD FOR THE INSPECTION, TESTING, AND MAINTENANCE OF WATER–BASED FIRE PROTECTION SYSTEMS. THE FIRE STANDPIPE SYSTEM SHALL BE INSTALLED, INSPECTED AND TESTED AS A CLASS 1 SYSTEM AS DEFINED PER NFPA 14: STANDARD FOR THE INSTALLATION OF STANDPIPE AND HOSE SYSTEMS.
5. PERFORM FIELD TESTS IN ACCORDANCE TO THE REQUIREMENTS OF NFPA 14: STANDARD FOR THE INSTALLATION OF STANDPIPE AND HOSE SYSTEMS AND NFPA 25: STANDARD FOR THE INSPECTION, TESTING, AND MAINTENANCE OF WATER–BASED FIRE PROTECTION SYSTEMS, PROJECT SPECIAL PROVISIONS, MANUFACTURERS' RECOMMENDATIONS, APPLICABLE STANDARDS, AND AS DIRECTED BY THE ENGINEER FOR PROPER OPERATIONAL AND FUNCTIONAL PERFORMANCE.
6. COORDINATE THE FIRE SUPPRESSION SYSTEM TESTING WITH THE STATE FIRE MARSHAL'S OFFICE. ALL TEST PROCEDURES AND REPORTS SHALL BE SUBMITTED TO THE ENGINEER AND THE STATE FIRE MARSHAL FOR REVIEW AND APPROVAL.
7. COORDINATE WITH THE TUNNEL FINISHES DRAWINGS FOR SIGNAGE DETAILS FOR THE STANDPIPE SYSTEM. STANDPIPE SYSTEM SIGNAGE SHALL CONFORM TO THE REQUIREMENTS OF NFPA 502: STANDARD FOR ROAD TUNNELS, BRIDGES AND OTHER LIMITED ACCESS HIGHWAYS AND NFPA 14: STANDARD FOR THE INSTALLATION OF STANDPIPE AND HOSE SYSTEMS. SIGNAGE SHALL BE PROVIDED FOR THE FIRE HOSE VALVE STATIONS, FIRE DEPARTMENT CONNECTIONS, AND ALL VALVES. ALL STANDPIPE SYSTEM COMPONENTS SHALL BE IDENTIFIED WITH SIGNAGE AND SHALL INCLUDE THE ASSET IDENTIFICATION NUMBER.
8. THE ENTIRE INSTALLATION SHALL BE INSPECTED, THOROUGHLY CLEANED, AND DAMAGED FINISHES TOUCHED UP AFTER FINAL COMPLETION AND PRIOR TO COMMISSIONING. ALL SURFACES AND EQUIPMENT DAMAGED IN THE COURSE OF THE WORK SHALL BE RESTORED TO THE ORIGINAL CONDITION.
9. PROVIDE COMBINATION AIR RELIEF/VACUUM RELIEF VALVES AT HIGH POINTS FOR EACH STANDPIPE SYSTEM.
10. CONTRACTOR SHALL OBTAIN ALL REQUIRED PERMITS AND APPROVALS PRIOR TO COMMENCEMENT OF THE WORK.
11. FLEXIBLE COUPLINGS TO BE USED IN ALL LOCATIONS SUBJECT TO LINEAR AND ANGULAR MOVEMENT. FLEXIBLE COUPLINGS SHALL BE VICTAULIC STYLE 177 OR EQUAL. RIGID COUPLINGS TO BE USED IN ALL LOCATIONS WHERE LINEAR AND ANGULAR MOVEMENT IS NOT ANTICIPATED.

HYDRANT FLOW TEST DATA

LOCATION 1:
DATE OF TEST: APRIL 20. 2023
LOCATION: 14 NORTH MAIN STREET, PROVIDENCE, RHODE ISLAND
STATIC PRESSURE: 90 PSI
RESIDUAL PRESSURE: 87 PSI
FLOW: 1087 GPM

LOCATION 2:
DATE OF TEST: APRIL 13, 2023
LOCATION: 106 WATERMAN STREET, PROVIDENCE, RHODE ISLAND
STATIC PRESSURE: 52 PSI
RESIDUAL PRESSURE: 48 PSI
FLOW: 1061 GPM

NOTE:

FLOW TEST DATA PROVIDED IS FOR BIDDING PURPOSES ONLY. CONTRACTOR SHALL PERFORM HYDRANT FLOW TEST AND DESIGN SYSTEM USING DATA CURRENT AT TIME OF CONSTRUCTION.

SYMBOLS

- TO BE DEMOLISHED
- HOSE VALVE ASSEMBLY (HV)
- FIRE DEPARTMENT CONNECTION
- TRAFFIC FLOW
- GATE VALVE
- BALL VALVE
- BUTTERFLY VALVE
- CHECK VALVE
- AUTOMATIC AIR RELEASE VALVE
- EXPANSION COUPLING
- FLEX COUPLING
- REDUCER (CONCENTRIC)
- REDUCER (ECCENTRIC)
- ELBOW UP
- ELBOW DOWN
- UNION
- FIRE HYDRANT
- FIRE EXTINGUISHER
- PIPE ANCHOR
- PIPE GUIDE
- VERTICAL SUPPORT
- LONGITUDINAL BRACE
- POINT OF CONNECTION
- DTE — DISTANCE TO EXIT

ABBREVIATIONS

AAV	AUTOMATIC AIR RELEASE VALVE
ARCH.	ARCHITECTURAL
ATR	ALL THREAD ROD
CMU	CONCRETE MASONRY UNIT
DIA.	DIAMETER
DIP	DUCTILE IRON PIPE
DN	DOWN
DTE–REF	DISTANCE TO EXIT – REFLECTIVE
EA.	EACH
FDC	FIRE DEPARTMENT CONNECTION
FHVC	FIRE HOSE VALVE CABINET
FPM	FEET PER MINUTE
FT.	FEET
GAL.	GALLON
HD.	HEAD
HDG	HOT DIPPED GALVANIZED
HV	HOSE VALVE ASSEMBLY
IN.	INCH
IV	ISOLATION VALVE
LBS.	POUNDS
LVL.	LEVEL
MFR.	MANUFACTURER
MTD.	MOUNTED
NA	NOT APPLICABLE
NC	NORMALLY CLOSED
NIC	NOT IN CONTRACT
NO	NORMALLY OPEN
NO.	NUMBER
NPS	NOMINAL PIPE SIZE
POC	POINT OF CONNECTION
PS–1	PIPE SUPPORT
REF.	REFERENCE
REQD.	REQUIRED
SCH.	SCHEDULE
TYP.	TYPICAL
WT.	WEIGHT

WSP USA INC.
100 SUMMER STREET, 13TH FLOOR
BOSTON, MA. 02110
166 VALLEY STREET, BUILDING 5,
PROVIDENCE, RI 02909
WWW.WSP.COM

RHODE ISLAND PUBLIC TRANSIT AUTHORITY

RHODE ISLAND
PUBLIC TRANSIT AUTHORITY

REVISIONS			REVISIONS		
NO.	DATE	BY	NO.	DATE	BY

EAST SIDE TUNNEL REHABILITATION

PROVIDENCE RHODE ISLAND

FIRE PROTECTION NOTES, SYMBOLS & LEGEND

DESIGNED BY: AH
CHECKED BY: DTD
DATE: 06/30/2023
PLAN NO.: FP–01
SHEET: 72 OF: 81

FP–NOTSYM.dwg

NOTES:

1. REFER TO SHEET NO. FP-01 FOR GENERAL NOTES, LEGEND AND ABBREVIATIONS.
2. ANCHOR POINTS SHALL ACCOMMODATE DEAD WEIGHT GRAVITY AND AXIAL & THRUST LOAD ALONG SLOPE.
3. REFER TO ARCHITECTURAL DRAWINGS FOR DTE SIGN GRAPHICS AND SIGN TABLE.

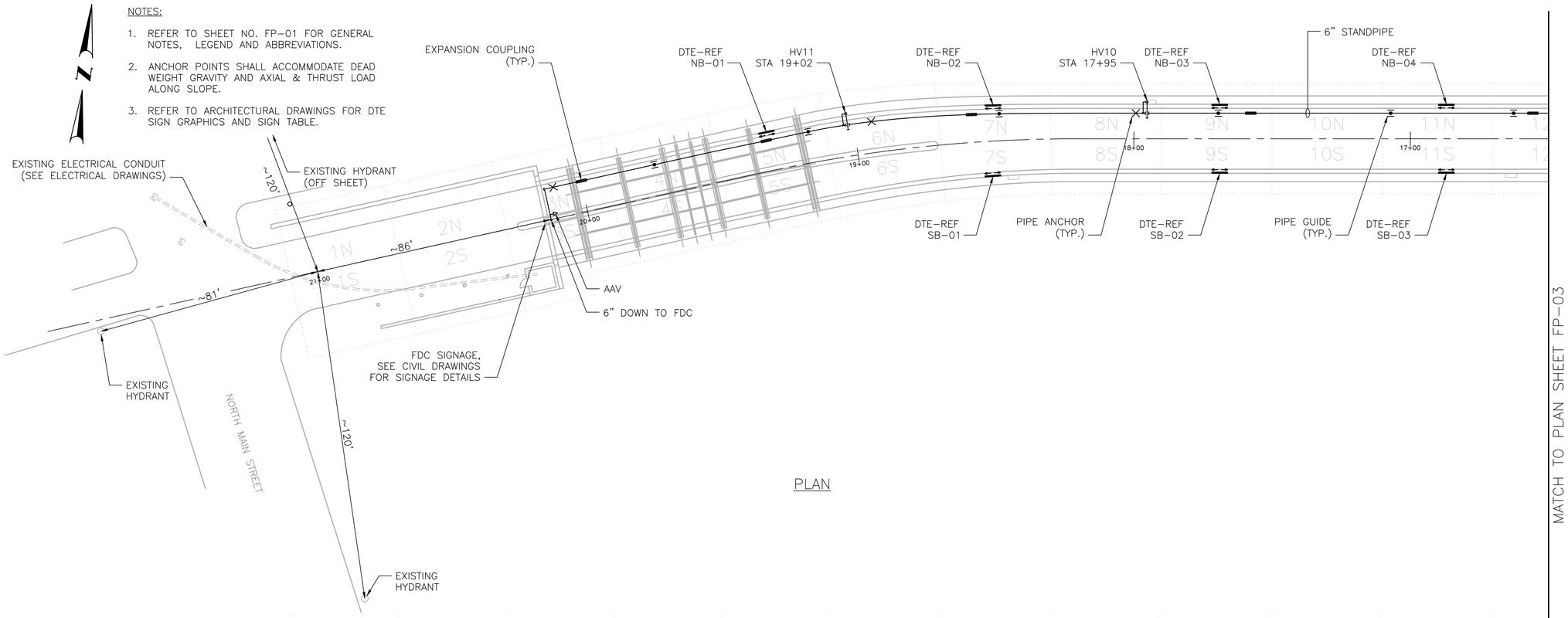

PLAN

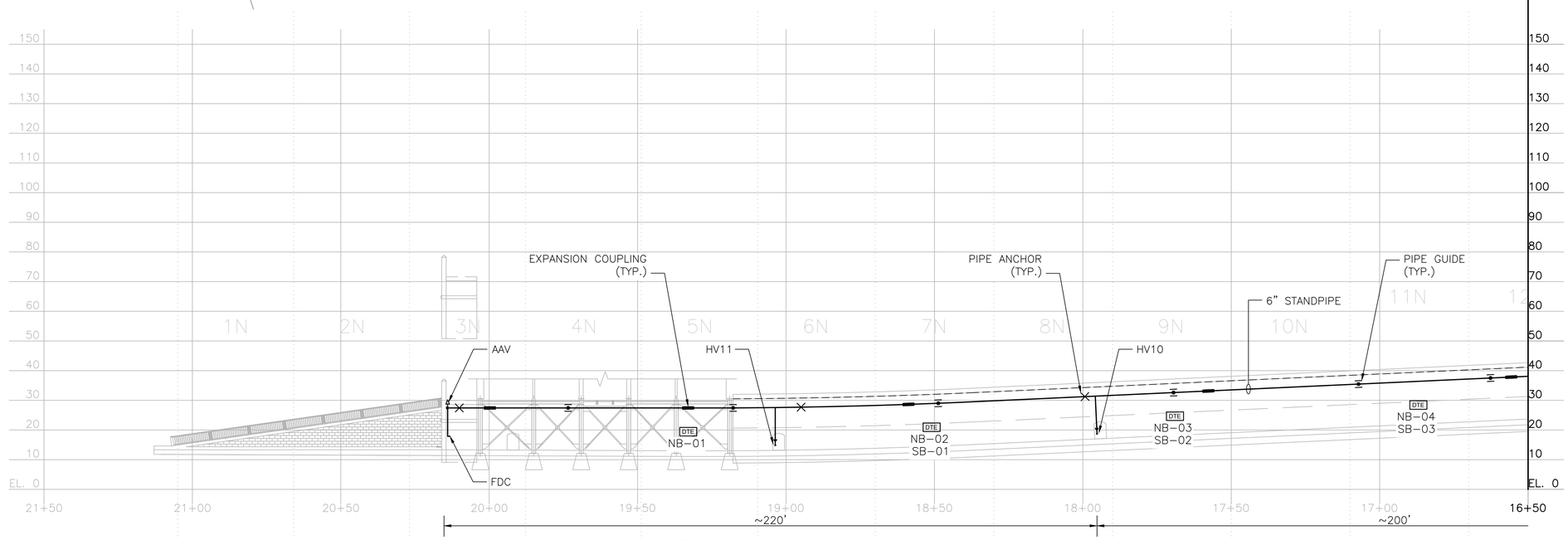

ELEVATION – LOOKING NORTH

WSP USA INC.

100 SUMMER STREET, 13TH FLOOR
BOSTON, MA. 02110

166 VALLEY STREET, BUILDING 5,
PROVIDENCE, RI 02909

WWW.WSP.COM

RHODE ISLAND PUBLIC TRANSIT AUTHORITY

RHODE ISLAND
PUBLIC TRANSIT AUTHORITY

REVISIONS			REVISIONS		
NO.	DATE	BY	NO.	DATE	BY

EAST SIDE TUNNEL REHABILITATION

PROVIDENCE RHODE ISLAND

FIRE PROTECTION PLAN & ELEVATION 1

DESIGNED BY: AH
CHECKED BY: DTD
DATE: 06/30/2023
PLAN NO.: FP-02
SHEET: 73 OF: 81

FPROTECT001.dwg

NOTES:

1. REFER TO SHEET NO. FP-01 FOR GENERAL NOTES, LEGEND AND ABBREVIATIONS.
2. ANCHOR POINTS SHALL ACCOMMODATE DEAD WEIGHT GRAVITY AND AXIAL & THRUST LOAD ALONG SLOPE.
3. REFER TO ARCHITECTURAL DRAWINGS FOR DTE SIGN GRAPHICS AND SIGN TABLE.

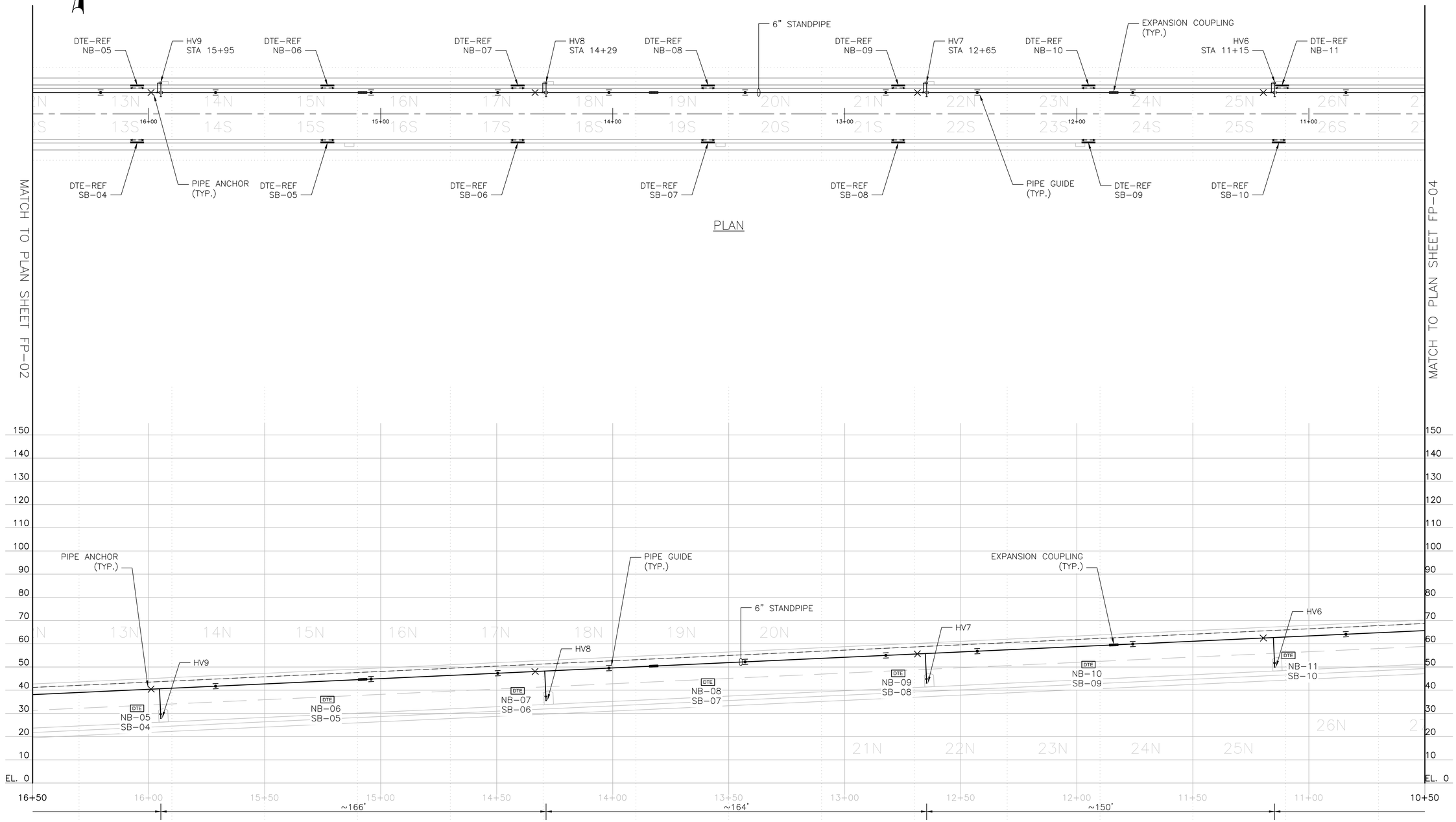

WSP USA INC.
100 SUMMER STREET, 13TH FLOOR
BOSTON, MA. 02110
166 VALLEY STREET, BUILDING 5,
PROVIDENCE, RI 02909
WWW.WSP.COM

RHODE ISLAND PUBLIC TRANSIT AUTHORITY

RHODE ISLAND
PUBLIC TRANSIT AUTHORITY

REVISIONS			REVISIONS		
NO.	DATE	BY	NO.	DATE	BY

EAST SIDE TUNNEL REHABILITATION

PROVIDENCE RHODE ISLAND

FIRE PROTECTION PLAN & ELEVATION 2

DESIGNED BY: AH
CHECKED BY: DTD
DATE: 06/30/2023
PLAN NO.: FP-03
SHEET: 74 OF: 81

FPROTECT002.dwg

NOTES:

1. REFER TO SHEET NO. FP-01 FOR GENERAL NOTES, LEGEND AND ABBREVIATIONS.
2. ANCHOR POINTS SHALL ACCOMMODATE DEAD WEIGHT GRAVITY AND AXIAL & THRUST LOAD ALONG SLOPE.
3. REFER TO ARCHITECTURAL DRAWINGS FOR DTE SIGN GRAPHICS AND SIGN TABLE.

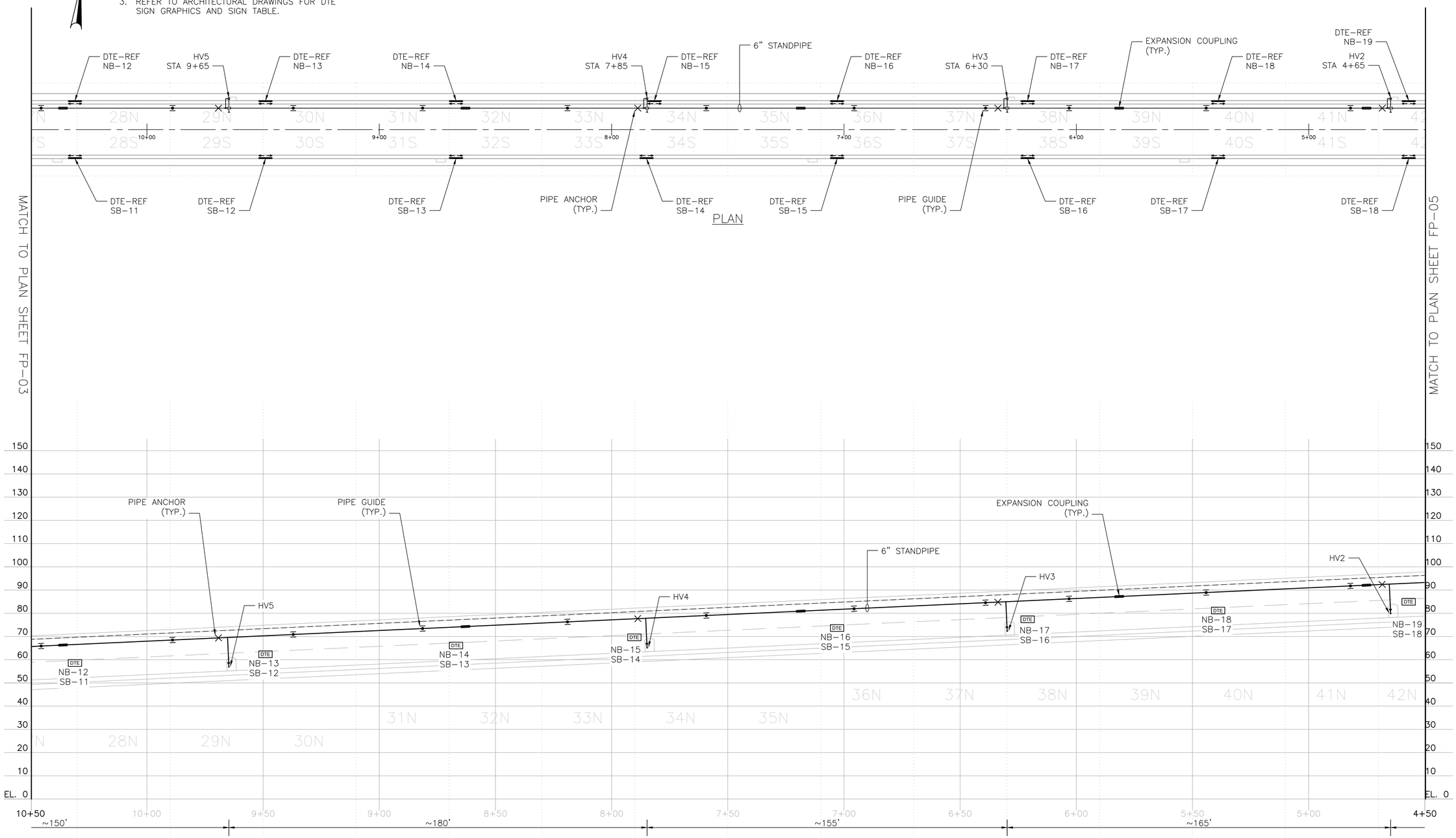

WSP USA INC.
100 SUMMER STREET, 13TH FLOOR
BOSTON, MA. 02110
166 VALLEY STREET, BUILDING 5,
PROVIDENCE, RI 02909
WWW.WSP.COM

RHODE ISLAND PUBLIC TRANSIT AUTHORITY

REVISIONS			REVISIONS		
NO.	DATE	BY	NO.	DATE	BY

EAST SIDE TUNNEL REHABILITATION

PROVIDENCE RHODE ISLAND

FIRE PROTECTION PLAN & ELEVATION 3

DESIGNED BY: AH
CHECKED BY: DTD
DATE: 06/30/2023
PLAN NO.: FP-04
SHEET: 75 OF: 81

FPROTECT003.dwg

NOTES:

1. REFER TO SHEET NO. FP-01 FOR GENERAL NOTES, LEGEND AND ABBREVIATIONS.
2. ANCHOR POINTS SHALL ACCOMMODATE DEAD WEIGHT GRAVITY AND AXIAL & THRUST LOAD ALONG SLOPE.
3. REFER TO ARCHITECTURAL DRAWINGS FOR DTE SIGN GRAPHICS AND SIGN TABLE.

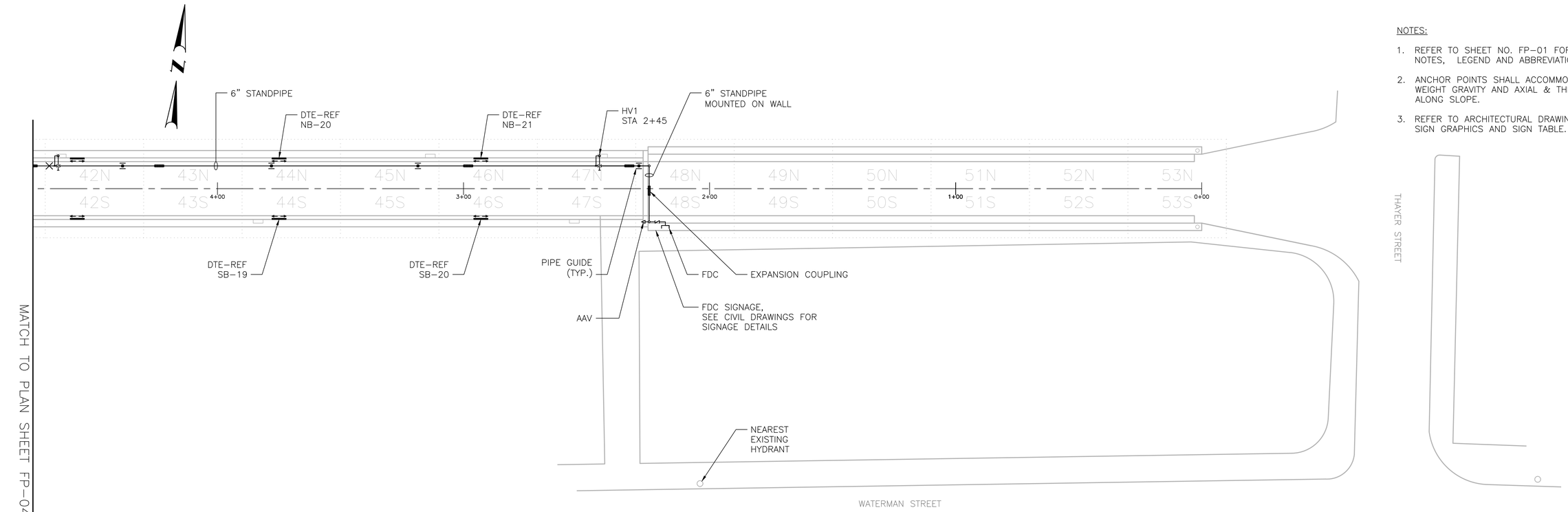

PLAN

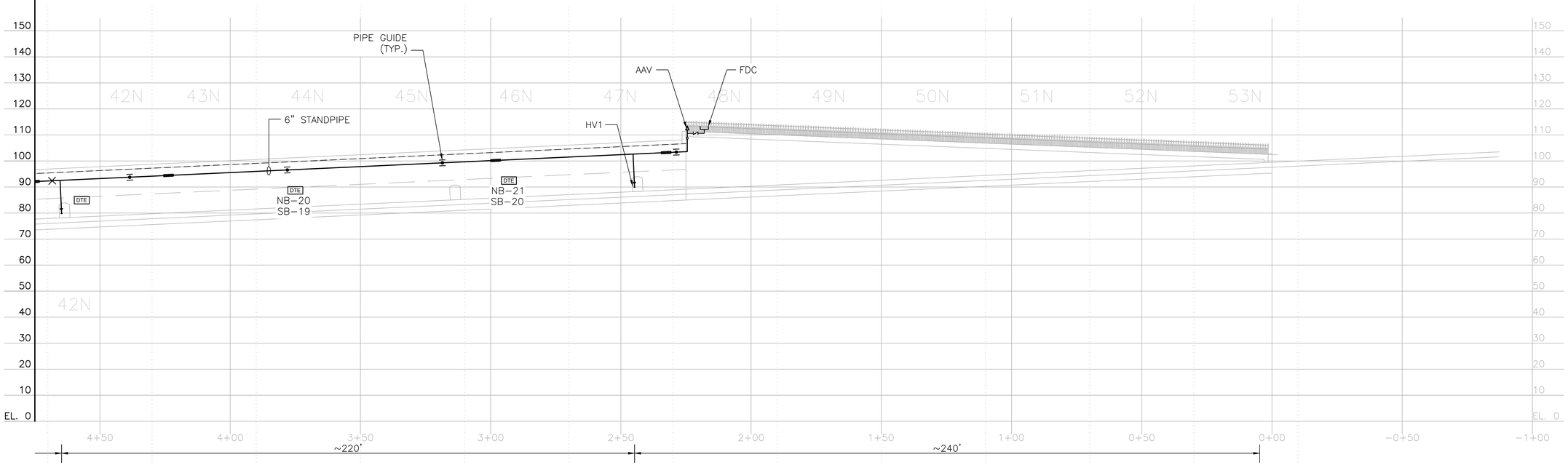

ELEVATION – LOOKING NORTH

WSP USA INC.

100 SUMMER STREET, 13TH FLOOR
BOSTON, MA. 02110

166 VALLEY STREET, BUILDING 5,
PROVIDENCE, RI 02909

WWW.WSP.COM

RHODE ISLAND PUBLIC TRANSIT AUTHORITY

RHODE ISLAND
PUBLIC TRANSIT AUTHORITY

REVISIONS			REVISIONS		
NO.	DATE	BY	NO.	DATE	BY

EAST SIDE TUNNEL REHABILITATION

PROVIDENCE RHODE ISLAND

FIRE PROTECTION PLAN & ELEVATION 4

DESIGNED BY: AH
CHECKED BY: DTD
DATE: 06/30/2023
PLAN NO.: FP-05
SHEET: 76 OF: 81

FPROTECT004.dwg

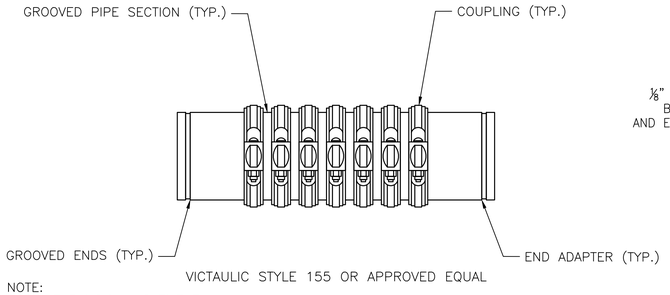

NOTE:
TOTAL EXPANSION MOVEMENT REQUIRED FOR 6" STANDPIPE HEADER: 14.4"

EXPANSION JOINT DETAIL
N.T.S.

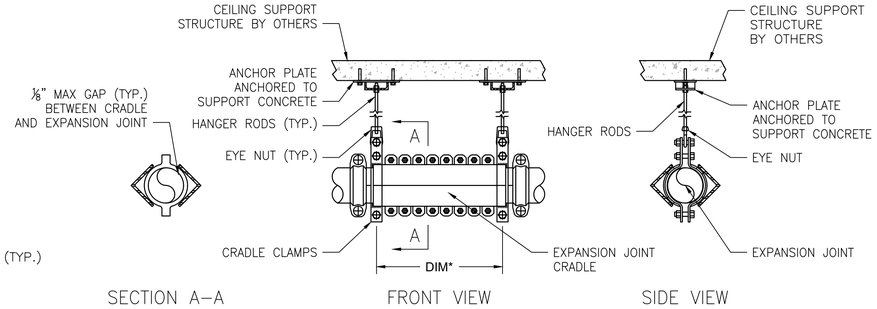

NOTES:

1. EXPANSION JOINTS SHALL BE PROPERLY GUIDED AND SUPPORTED TO PREVENT SAGGING AND BUCKING.
2. DIM* OF THE FRAME VARIES BASED ON THE EXPANSION JOINT SIZES AND MAXIMUM LINEAR MOVEMENT.
3. CEILING SUPPORT STRUCTURE SHALL BE REVIEWED BY THE STRUCTURAL ENGINEER OF RECORD TO ENSURE ADEQUATE LOAD CARRYING CAPACITY.
4. CRADLE CLAMPS SHALL BE TIGHTENED SHIPPING. AFTER THE ENTIRE PIPING INSTALLATION IS COMPLETE, CRADLE CLAMPS SHALL BE LOOSENED TO MAINTAIN 1/8" CLEARANCE FROM CLAMP TO O.D. OF THE END NIPPLES.

TYPICAL HORIZONTAL PIPING EXPANSION JOINT CRADLE
N.T.S.

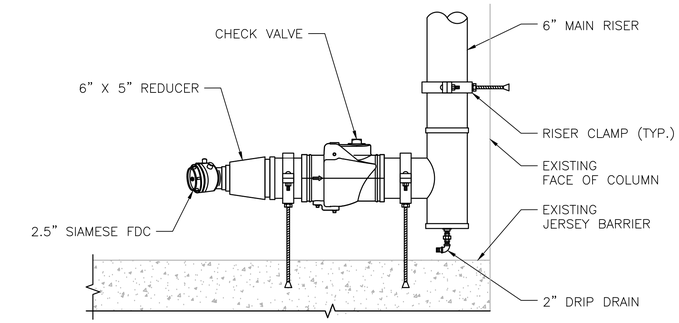

WEST PORTAL FIRE DEPARTMENT CONNECTION DETAIL
N.T.S.

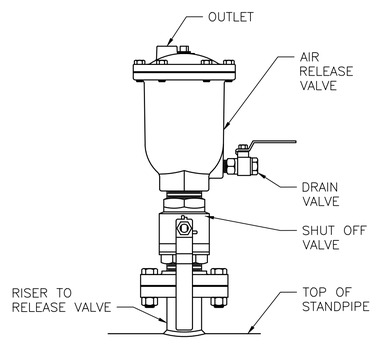

AUTOMATIC AIR RELEASE VALVE DETAIL
N.T.S.

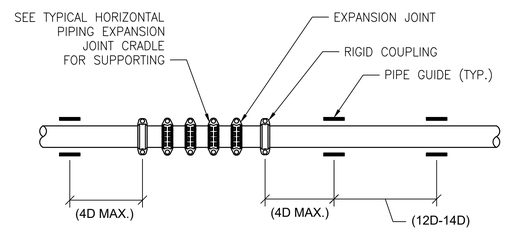

EXPANSION JOINT GUIDING
N.T.S.

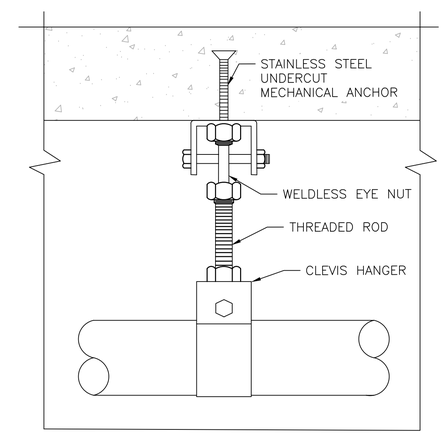

SECTION D
N.T.S.

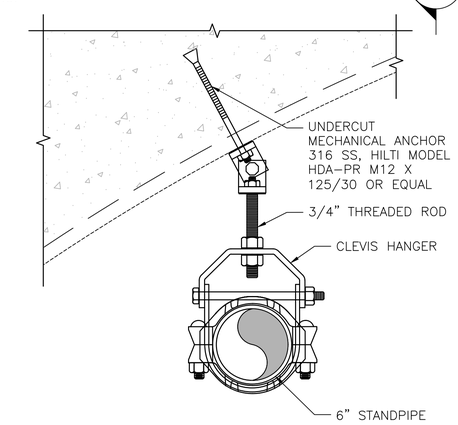

PIPE SUPPORT DETAIL 1
N.T.S.

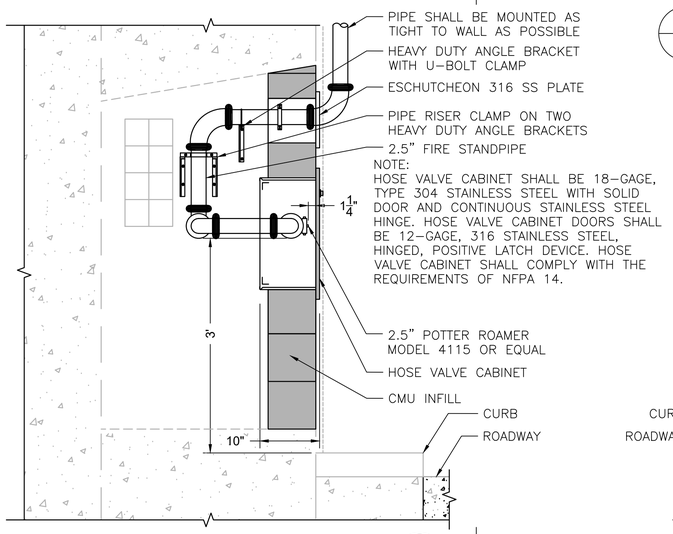

NOTE:
HOSE VALVE CABINET SHALL BE 18–GAGE, TYPE 304 STAINLESS STEEL WITH SOLID DOOR AND CONTINUOUS STAINLESS STEEL HINGE. HOSE VALVE CABINET DOORS SHALL BE 12–GAGE, 316 STAINLESS STEEL, HINGED, POSITIVE LATCH DEVICE. HOSE VALVE CABINET SHALL COMPLY WITH THE REQUIREMENTS OF NFPA 14.

SECTION A
SCALE: 1" = 1'–0"

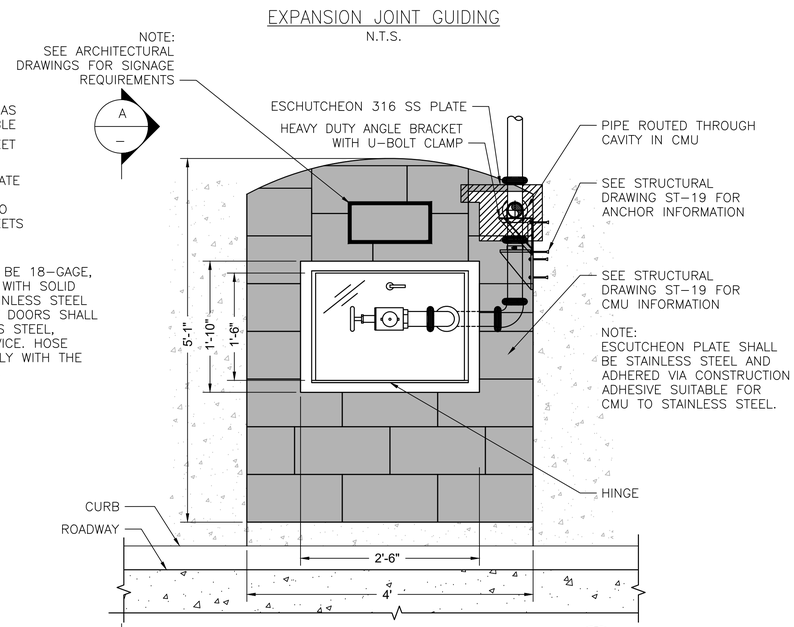

NOTE:
ESCUTCHEON PLATE SHALL BE STAINLESS STEEL AND ADHERED VIA CONSTRUCTION ADHESIVE SUITABLE FOR CMU TO STAINLESS STEEL.

SECTION B
SCALE: 1" = 1'–0"

TYPICAL HOSE VALVE DETAIL
SCALE: 1" = 1'–0"

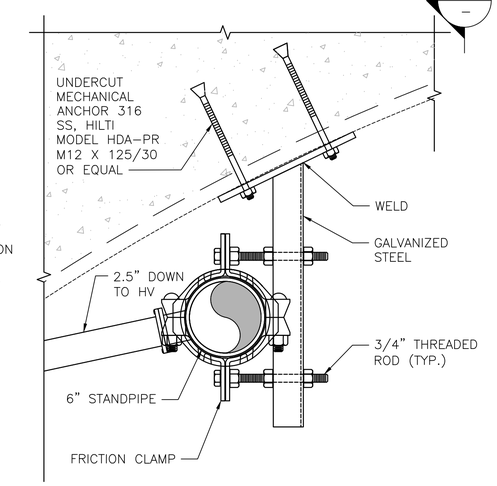

PIPE SUPPORT DETAIL 2
N.T.S.

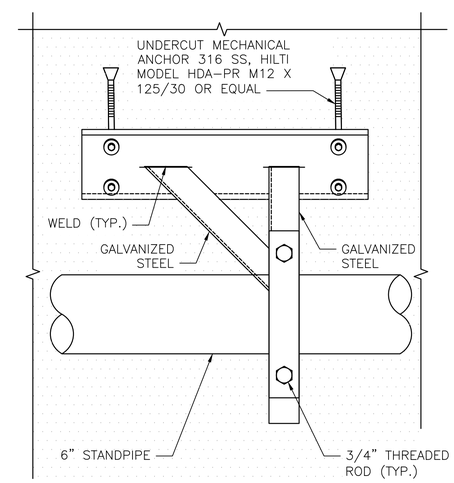

SECTION C
N.T.S.

WSP USA INC.
100 SUMMER STREET, 13TH FLOOR
BOSTON, MA. 02110
166 VALLEY STREET, BUILDING 5,
PROVIDENCE, RI 02909
WWW.WSP.COM

RHODE ISLAND PUBLIC TRANSIT AUTHORITY

RHODE ISLAND
PUBLIC TRANSIT AUTHORITY

REVISIONS			REVISIONS		
NO.	DATE	BY	NO.	DATE	BY

EAST SIDE TUNNEL REHABILITATION
PROVIDENCE RHODE ISLAND
FIRE PROTECTION DETAILS
SHEET 1 OF 2

DESIGNED BY: AH
CHECKED BY: DTD
DATE: 06/30/2023
PLAN NO.: FP–06
SHEET: 77 OF: 81

FPROTECTDETL.dwg

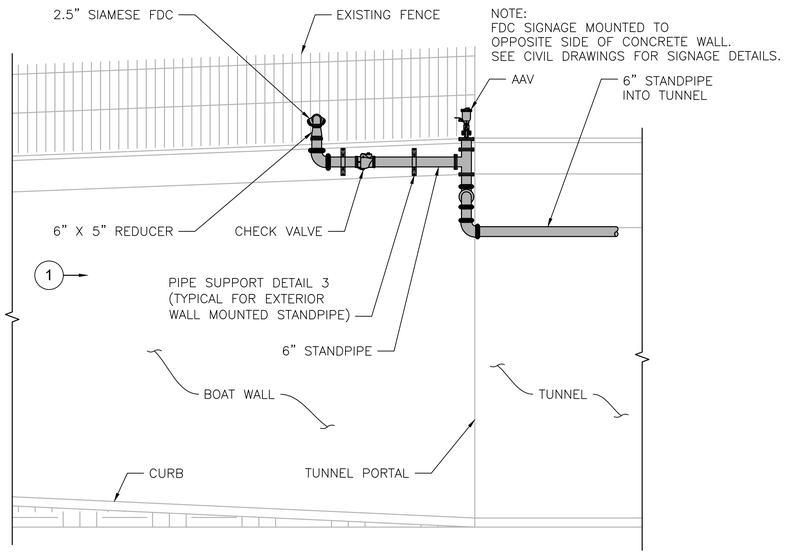

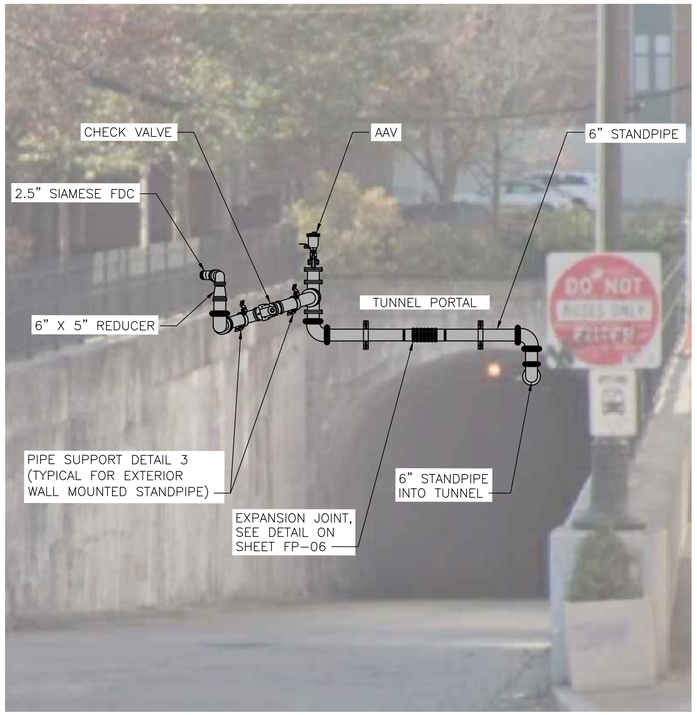

1 PHOTO 1 – PROPOSED EAST PORTAL FIRE DEPARTMENT CONNECTION

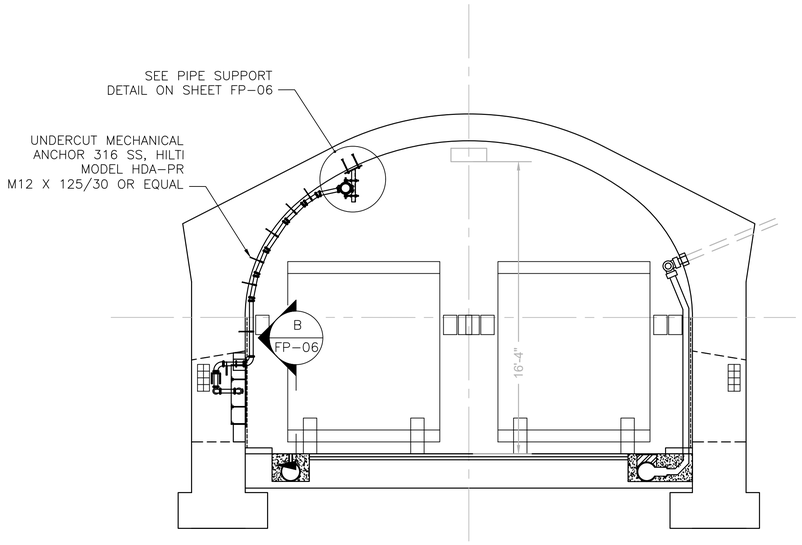

TYPICAL SECTION AT HV-1 THROUGH HV-10

SCALE: 1" = 4'-0"

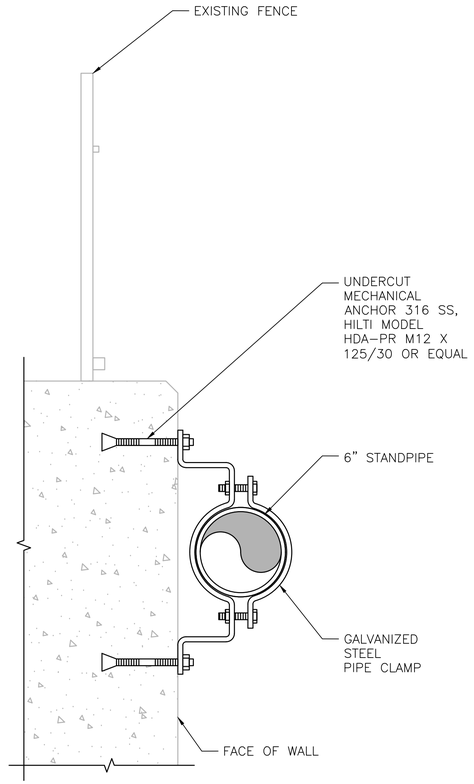

PIPE SUPPORT DETAIL 3

N.T.S.

WSP USA INC.
100 SUMMER STREET, 13TH FLOOR
BOSTON, MA. 02110
166 VALLEY STREET, BUILDING 5,
PROVIDENCE, RI 02909
WWW.WSP.COM

RHODE ISLAND PUBLIC TRANSIT AUTHORITY

RHODE ISLAND
PUBLIC TRANSIT AUTHORITY

REVISIONS			REVISIONS		
NO.	DATE	BY	NO.	DATE	BY

EAST SIDE TUNNEL REHABILITATION

PROVIDENCE RHODE ISLAND

FIRE PROTECTION DETAILS
SHEET 2 OF 2

DESIGNED BY: AH
CHECKED BY: DTD
DATE: 06/30/2023
PLAN NO.: FP-07
SHEET: 78 OF: 81

FPROTECTDETL2.dwg

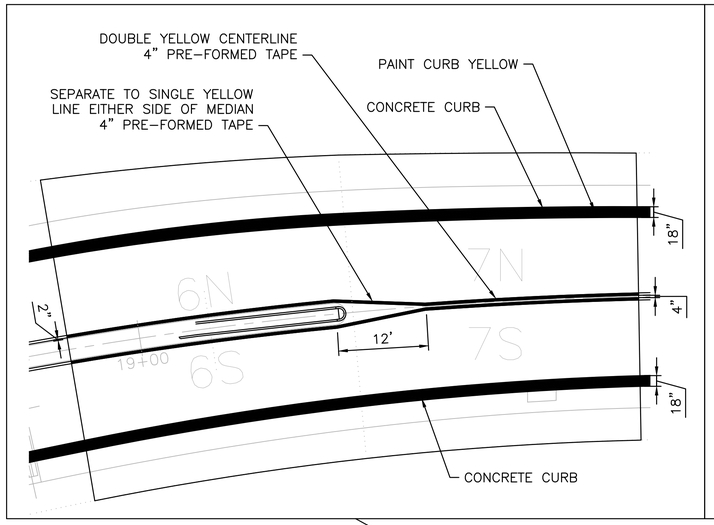

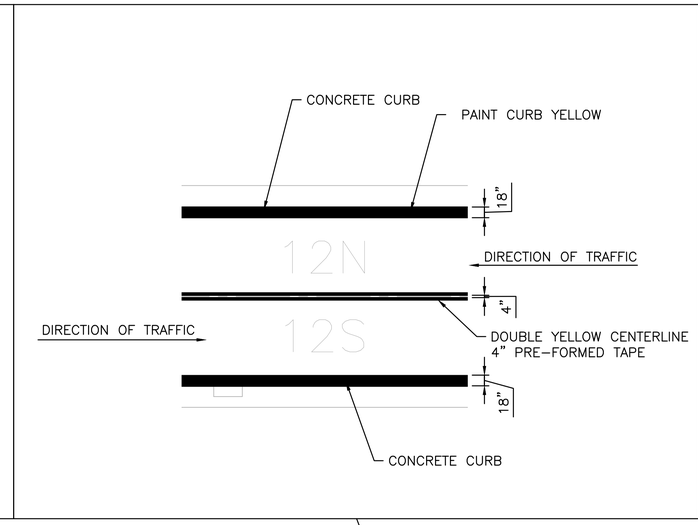

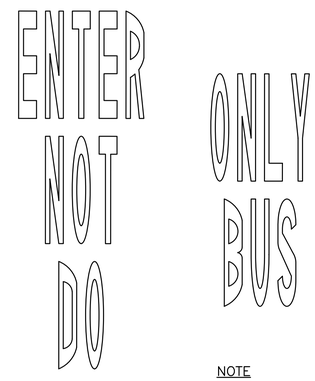

NOTE

1. SEE BELOW FOR TEXT PLACEMENT IN RELATION TO THE DIRECTION OF TRAFFIC

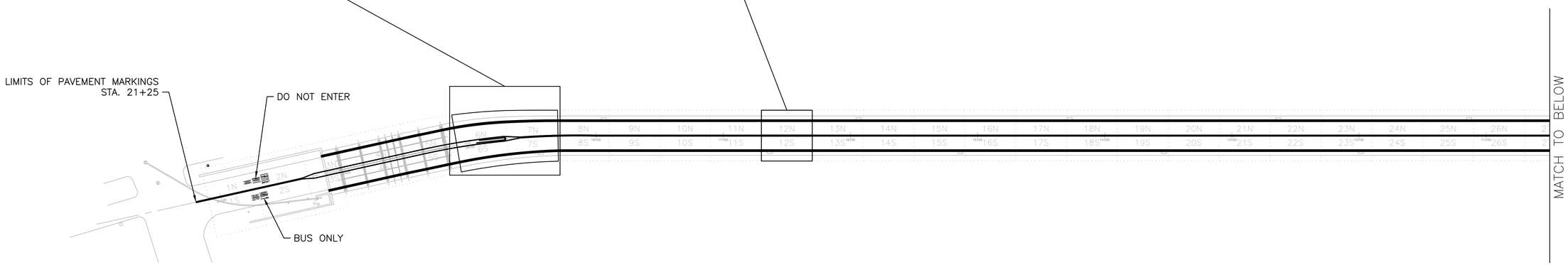

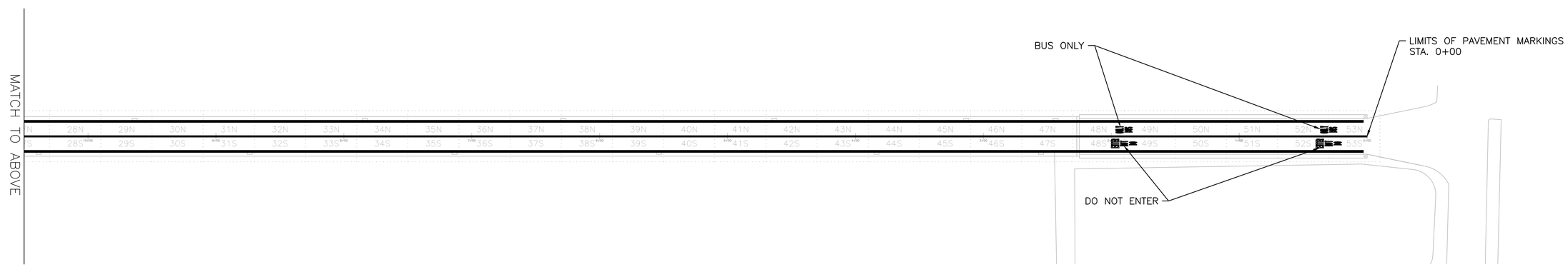

STAGE 1 EASTBOUND AND WESTBOUND

N.T.S.

WSP USA INC.

100 SUMMER STREET, 13TH FLOOR
BOSTON, MA. 02110

166 VALLEY STREET, BUILDING 5,
PROVIDENCE, RI 02909

WWW.WSP.COM

RHODE ISLAND PUBLIC TRANSIT AUTHORITY

RHODE ISLAND
PUBLIC TRANSIT AUTHORITY

SCALE: NOT TO SCALE

REVISIONS			REVISIONS		
NO.	DATE	BY	NO.	DATE	BY

EAST SIDE TUNNEL REHABILITATION

PROVIDENCE RHODE ISLAND

PAVEMENT MARKING PLAN

DESIGNED BY: AP
CHECKED BY: RP
DATE: 06/30/2023
PLAN NO.: TR-01
SHEET: 79 OF: 81

PAVEMENTMARKINGL001.dwg

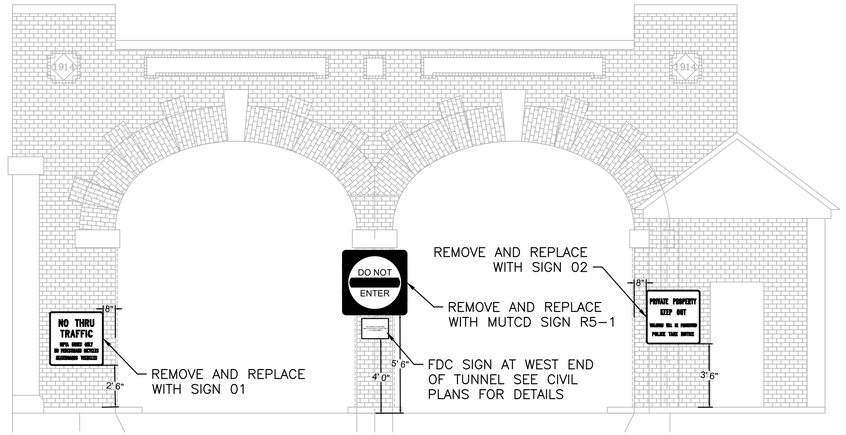

WESTERN TUNNEL FACADE
N.T.S.

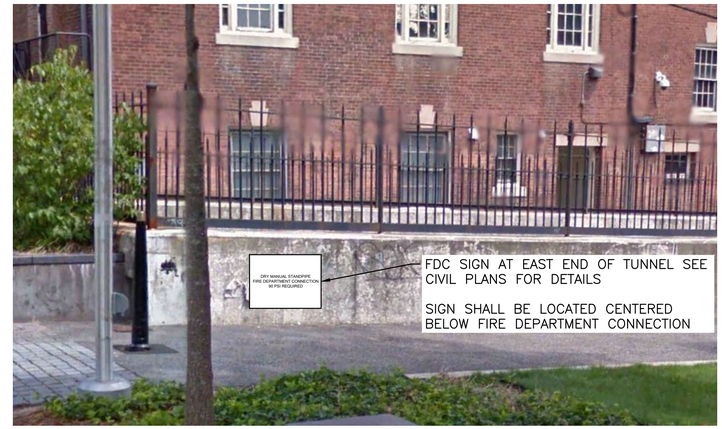

EASTERN TUNNEL APPROACH
N.T.S.

Sign R5-1
N.T.S.

SIGN 01
N.T.S.

SIGN 02
N.T.S.

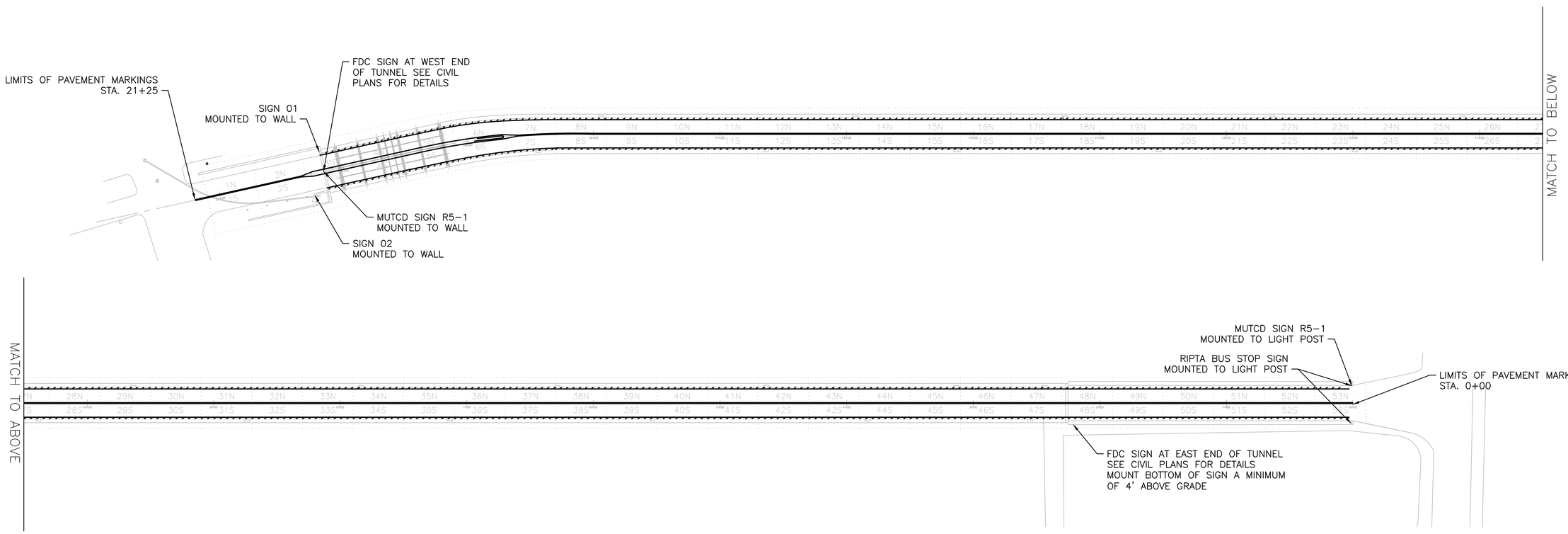

EASTBOUND AND WESTBOUND PLAN
N.T.S.

WSP USA INC.
100 SUMMER STREET, 13TH FLOOR
BOSTON, MA. 02110
166 VALLEY STREET, BUILDING 5,
PROVIDENCE, RI 02909
WWW.WSP.COM

RHODE ISLAND PUBLIC TRANSIT AUTHORITY

RHODE ISLAND
PUBLIC TRANSIT AUTHORITY

SCALE: NOT TO SCALE

REVISIONS			REVISIONS		
NO.	DATE	BY	NO.	DATE	BY

EAST SIDE TUNNEL REHABILITATION

PROVIDENCE RHODE ISLAND

SIGNING PLAN

DESIGNED BY: AP
CHECKED BY: RP
DATE: 06/30/2023
PLAN NO.: TR-02
SHEET: 80 OF: 81

PAVEMENTMARKING002.dwg

NOTES:

1. SEE GENERAL NOTES SHEET NO. G–03.
2. FULL CLOSURE (DAYS AND NIGHTS) 2 10 HOUR SHIFTS 7 DAYS A WEEK – CONTRACTOR TO COORDINATE WITH RIPTA TO SET UP TEMPORARY BUS TRAFFIC REROUTING AND MOVE CONSTRUCTION BARRIERS TO CLOSE OFF ENTIRE SITE FROM NORTH MAIN STREET TO THAYER STREET

TUNNEL WALLS AND ROADWAY SCOPE:

1. CONTRACTOR TO SET UP A SECURITY BARRIERS AT EACH END OF THE TUNNEL TO PREVENT VEHICLES OR PEDESTRIANS FROM BEING ABLE TO ENTER THE TUNNEL.
2. ACTIVITIES WILL CONSIST OF
   - A) HYDRO DEMOLITION OF DELAMINATED GUNITE ON WALLS OF TUNNEL
   - B) DRAINAGE LINE INSTALLATION IN TUNNEL AND DRAINAGE STRUCTURE INSTALLATION IN UPPER APPROACH SECTION
   - C) POWERWASHING OF WALLS
   - D) LEAK, CRACK AND SPALL REPAIRS ON WALLS OF TUNNEL AND UPPER APPROACH SECTION
   - E) REPAIR OF ROADWAY IN TUNNEL AND UPPER APPROACH SECTION

TUNNEL ARCH SCOPE:

1. ACTIVITIES WILL CONSIST OF:
   - A) HYDRO DEMOLITION OF DELAMINATED GUNITE IN ENTIRE ARCH
   - B) POWERWASHING OF ARCH
   - C) LEAK, CRACK AND SPALL REPAIRS IN ARCH
   - D) RENOVATION OF ELECTRICAL ROOM AND INSTALLATION OF EQUIPMENT
   - E) INSTALLATION OF LIGHTING SYSTEM INCLUDING TESTING
   - F) REMOVE EXISTING PAVEMENT STRUCTURE
   - G) INSTALLATION OF HORIZONTAL DRAIN PIPE AND DOWNSPOUTS AND DEFELECTORS
   - H) INSTALLATION OF DRAINAGE STRUCTURES IN APPROACH SECTION
   - I) PAVING AND STRIPING

OTHER TUNNEL SCOPE:

1. ACTIVITIES WILL CONSIST OF:
   - A) FIRE STANDPIPE INSTALLATION
   - B) PAINTING OF WALLS
   - C) PUNCHLIST WORK

LEGEND

TUNNEL LANE CLOSED

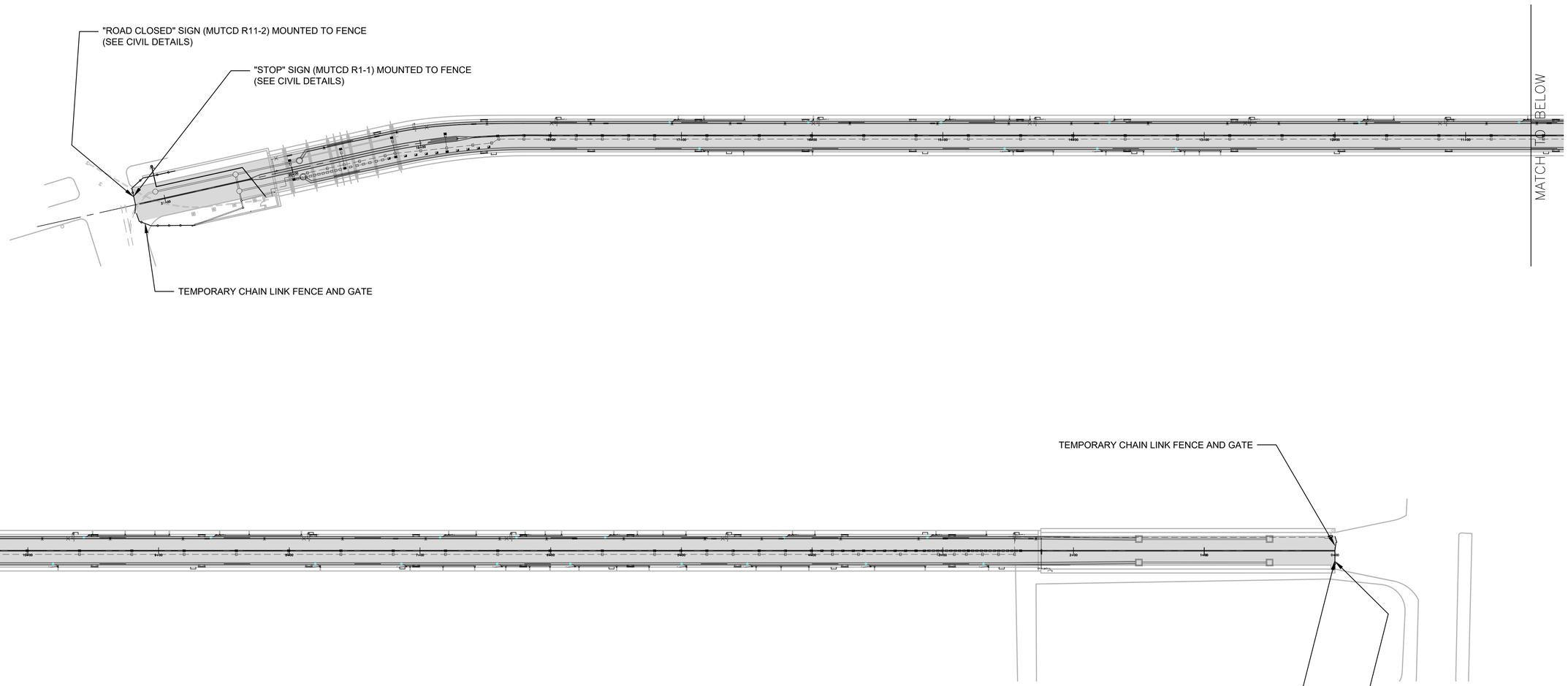

EASTBOUND AND WESTBOUND PLAN

N.T.S.

WSP USA INC.

100 SUMMER STREET, 13TH FLOOR
BOSTON, MA. 02110

166 VALLEY STREET, BUILDING 5,
PROVIDENCE, RI 02909

WWW.WSP.COM

RHODE ISLAND PUBLIC TRANSIT AUTHORITY

RHODE ISLAND
PUBLIC TRANSIT AUTHORITY

SCALE: NOT TO SCALE

REVISIONS			REVISIONS		
NO.	DATE	BY	NO.	DATE	BY

EAST SIDE TUNNEL REHABILITATION

PROVIDENCE RHODE ISLAND

TRAFFIC CONTROL

DESIGNED BY: XXX
CHECKED BY: XXX
DATE: 06/30/2023
PLAN NO.: TR–03
SHEET: 81 OF: 81

TCONTROL003.dwg

Activity ID	Activity Name
PSE - East Side Tunnel Schedule - Only Full Shutdown	
Construction - Full Shutdown - 24x7	
Start-up	
A1260	Mobilization & Field Office (Day)
A1280	Install Temp. Signs / Barriers / Impact Attenuator / Temp Lights / Delineators
Bus Shelter	
A4130	Refurbish Bus Shelter and Sidewalk Repair - Single Shift (1 Crew)
Eastbound & Westbound	
West Portal Boat Section 20+17 to 21+23	
A4050	Construct MHs & Remaining Drain Pipe to Existing MH - West Portal
A4140	Boat Wall and Portal Wall Repair - West
20+17 to 11+00	
Hydro Demo / Powerwash	
A3360	Clean Drain / Setup Hydro Vac - EB - 1st Half (Night)
A3450	Perform Hydro Demo - EB - 1st Half (Day)
A3460	Perform Powerwash on Wall - EB - 1st Half
A3630	Clean Drain / Setup Hydro Vac - WB - 1st Half (Night)
A3640	Perform Hydro Demo - WB - 1st Half (Day)
A3660	Perform Powerwash on Wall - WB - 1st Half
A3530	Perform Hydro Demo for Gunite Removal & Power wash - Ceiling - 1st Half
Curb Demo / Drain / Piping	
A3440	Remove Walkway, Curb & New Drain - EB - 1st Half
A3650	Remove Walkway, Curb & New Drain - WB - 1st Half
A4090	Block off the Splice Chambers Using CMU - 1st Half
A3920	Install 6" Heated Pipe, Downspouts & Connections - EB - 1st Half
A3860	Install 6" Heated Pipe, Downspouts & Connections - WB - 1st Half
A3850	Fire Standpipe & Connection - WB - 1st Half
Structural	
A3380	Leak Repair - Wall - EB - 1st Half
A3490	Perform Crack / Spall Repair - Wall - EB - 1st Half
A3670	Leak Repair - Wall - WB - 1st Half
A3680	Perform Crack / Spall Repair - Wall - WB - 1st Half
A3861	Leak Repair - Ceiling - 1st Half
A3851	Perform Crack / Spall Repair / Seal - Ceiling - 1st Half
A3480	Remove & Replace Existing Crash Attenuator - 19+00
Lighting	
A3790	Remove & Replace Tunnel Lighting - 1st Half
11+00 to 2+25	
Hydro Demo / Powerwash	
A3540	Clean Drain / Setup Hydro Vac - EB - 2nd Half (Night)
A3550	Perform Hydro Demo - EB - 2nd Half (Day)
A3570	Perform Powerwash on Wall - EB - 2nd Half
A3710	Clean Drain / Setup Hydro Vac - WB - 2nd Half (Night)
A3720	Perform Hydro Demo - WB - 2nd Half (Day)
A3740	Perform Powerwash on Wall - WB - 2nd Half
A3930	Perform Hydro Demo for Gunite Removal & Power wash - Ceiling - 2nd Half
Curb Demo / Drain / Piping	
A3560	Remove Walkway, Curb & New Drain - EB - 2nd Half
A3730	Remove Walkway, Curb & New Drain - WB - 2nd Half
A4100	Block off the Splice Chambers Using CMU - 2nd Half
A3960	Install 6" Heated Pipe, Downspouts & Connections - EB - 2nd Half
A3980	Install 6" Heated Pipe, Downspouts & Connections - WB - 2nd Half
A3970	Fire Standpipe & Connection - WB - 2nd Half

Activity ID	Activity Name
Structural	
A3580	Leak Repair - Wall - EB - 2nd Half
A3590	Perform Crack / Spall Repair - Wall - EB - 2nd Half
A3750	Leak Repair - Wall - WB - 2nd Half
A3760	Perform Crack / Spall Repair - Wall - WB - 2nd Half
A3950	Leak Repair - Ceiling - 2nd Half
A3940	Perform Crack / Spall Repair / Seal - Ceiling - 2nd Half
Lighting	
A3871	Remove & Replace Tunnel Lighting - 2nd Half
East Portal Boat Section 2+25 to 0+00	
A4060	Construct MH & Remaining Drain Pipe to Existing MH
A4150	Boat Wall and Portal Wall Repair - East
Electrical Room	
A3890	Perform Electrical Room Scope - Demo Existing, Repair Ceiling & Wall, Floor Slab, New Equip.
Close-out	
A4110	Remove Existing Asphalt & Repair Roadway
A4120	Cure Roadway Repair
A3810	Road Work Asphalt, Milling & Pavement Marking
A4010	Perform Painting & Anti Graffiti Coating on Tunnel Walls - 2 Crews
A3900	Fire Proofing (Promat) - 2 Crews
A3870	Clean Drain & MHs / Connection to Sewer MH
A4020	Install Permanent Signs
A3880	Testing & Commissioning - Lighting, Fire Standpipe, Drain
A4160	Cleanup & Demob
A3910	Punchlist - Full Shutdown
A4040	Overall Punchlist (Night) / As-Builts